THIS DRAWING IS UNPUBLISHED. RELEASED FOR PUBLICATION -,- .
© COPYRIGHT - By - ALL RIGHTS RESERVED.

LOC	DIST
ES	00

REVISIONS

P	LTR	DESCRIPTION	DATE	DWN	APVD
	A1	REVISED PER ECO-11-005033	29MAR11	RK	HMR

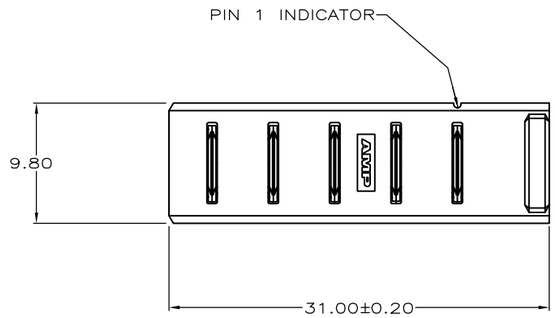

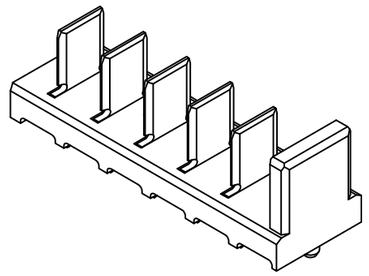

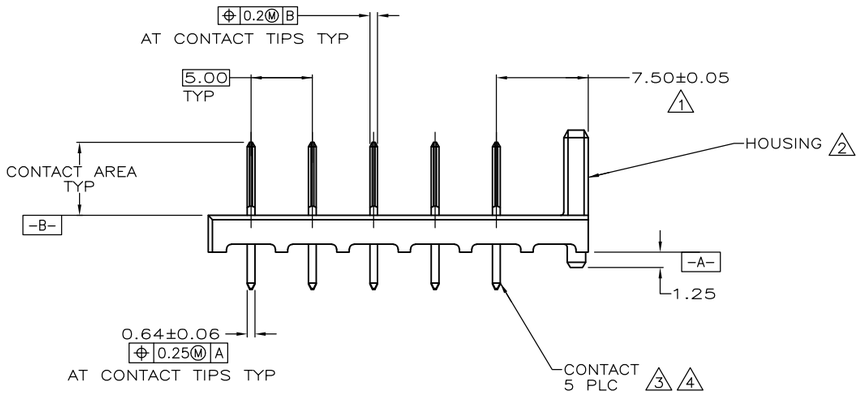

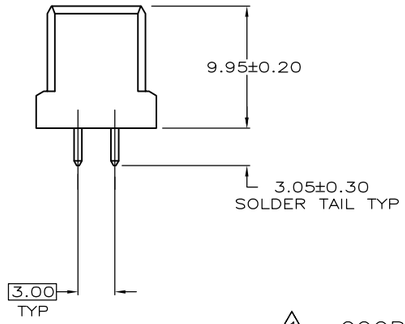

1. COORDINATE DIMENSION APPLIES FROM CENTER OF ACTUAL FEATURE.
2. HOUSING: POLYPHTHALAMIDE, COLOR BLACK.
3. CONTACTS: BRASS
4. 2.54um MIN TIN ON SOLDER TAIL OVER 1.90um MIN NICKEL ALL OVER.

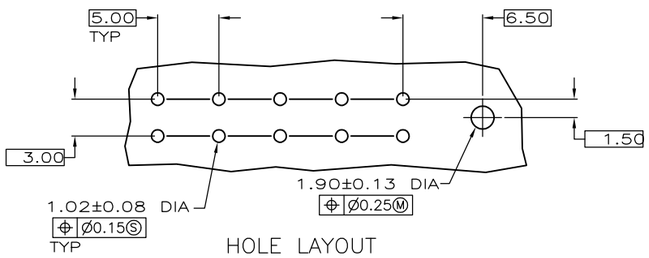

HOLE LAYOUT

5787430-1
PART NO

THIS DRAWING IS A CONTROLLED DOCUMENT.		DWN S.KLINE 03/09/95	TE Connectivity
DIMENSIONS: mm	TOLERANCES UNLESS OTHERWISE SPECIFIED: 0 PLC ± - ; 1 PLC ± - ; 2 PLC ± 0.13 ; 3 PLC ± - ; 4 PLC ± - ; ANGLES ± -	CHK S.KLINE 03-15-95	NAME: HEADER ASSEMBLY, VERTICAL, 5mm ¢, 5 POSN, SINGLE KEY, STRAIGHT SOLDER TAIL, 12V, BATTERY INTERCONNECT
		APVD S.KLINE 03-15-95	
		PRODUCT SPEC 108-1501	
		APPLICATION SPEC 114-24005	SIZE A3 / CAGE CODE 00779 / DRAWING NO C-5787430 / RESTRICTED TO —
MATERIAL 2 3	FINISH 4	WEIGHT —	
CUSTOMER DRAWING			SCALE 3:1 / SHEET 1 OF 1 / REV A1