UM0284
User Manual

Getting started with the STUSB03E USB full-speed transceiver demonstration board

Introduction

The STUSB03E USB full-speed transceiver is fully compliant with the universal serial bus specification revision 2.0. It provides a complete physical layer solution for any USB full speed device. The STUSB03E connected with an USB controller is ideal for use in mobile phones, digital cameras, printers, PDAs, etc.

The STUSB03E USB full-speed transceiver demonstration board is designed for demonstration and evaluation purposes.

Figure 1. Assembled STUSB03E USB full-speed transceiver demonstration board PCB

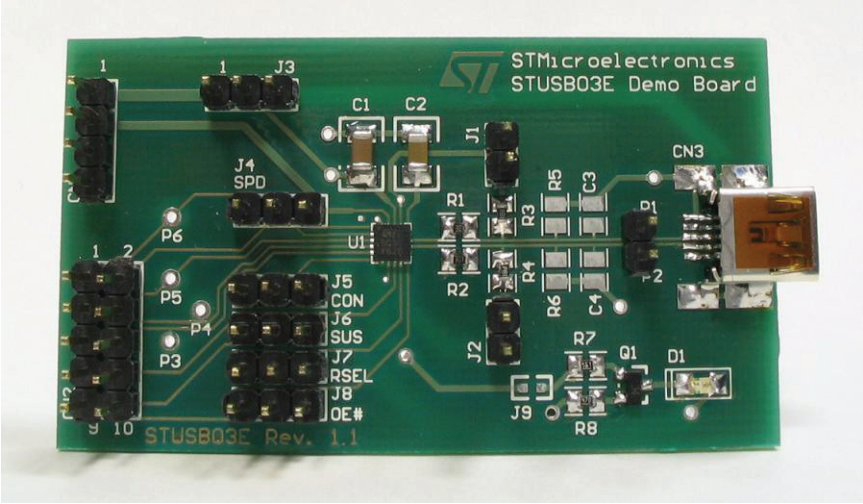

AM01731v1

Contents

1 Hardware description 3

1.1 Power requirements 3

1.2 Jumper assignments 4

1.3 Connector assignments 4

1.4 Test points 5

2 References 6

Appendix A STUSB03E demonstration board schematic diagram 7

Appendix B STUSB03E demonstration board components layout 8

Appendix C STUSB03E demonstration board bill of materials 9

Revision history 10

1 Hardware description

The demonstration board contains the STUSB03E USB low/full speed transceiver, one power supply connector, one mini-B USB connector, a connector for interfacing with the controller and all required discrete components (pull-up resistors, serial resistors and power supply capacitors). The device can also be configured using a set of jumpers and the main signals can be accessed through test points (see *Section 1.4*).

Figure 2. STUSB03E demonstration board block diagram

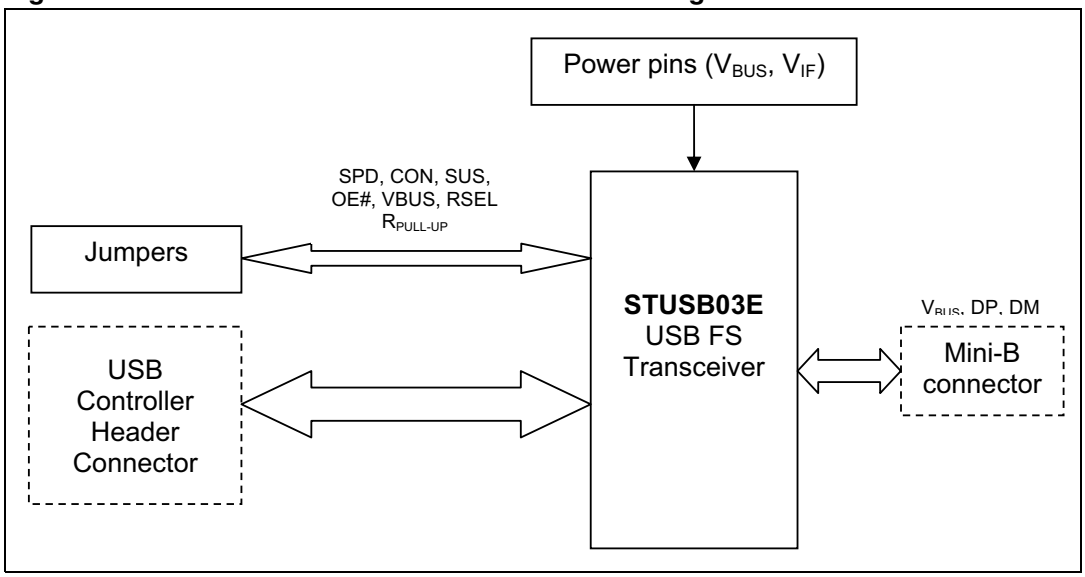

The 'USB controller header connector' makes it possible to connect a USB controller or any digital control system. For more information concerning the connection of the USB controller, refer to *Table 4: CN2 pin assignments*.

The jumpers also enable testing and measurement of the STUSB03E without a USB controller.

1.1 Power requirements

The following supply voltages for the STUSB03E USB FS transceiver are recommended:

- V_{IF} = 1.6 - 3.6 (typical V_{IF} value is 1.8 V)
- V_{BUS} = 4.0 - 5.5 V (typical V_{BUS} value is 5 V).

The demonstration board is designed for the same voltage ranges. The board does not contain a voltage regulator.

Jumper J3 is used to choose whether to supply the V_{BUS} pin from the USB connector or from CN1.

When the V_{BUS} voltage is above V_{BUSDET} threshold, LED D1 switches ON. Connect jumper J9 to enable this function.

1.2 Jumper assignments

Table 1 describes the jumper assignments of the demonstration board.

Table 1. Demonstration board jumper assignments

Jumper	Related pin(s)	Description
J1	D+	Connected: connects a 1.5 kΩ pull-up resistor to the D+ data line. Must be connected in full-speed mode when R_{SEL} = 0 Leave open when in low-speed mode.
J2	D-	Connected: connects a 1.5 kΩ pull-up resistor to the D- data line. Must be connected in low-speed mode. Leave open when in full-speed mode.
J3	V_{BUS}	1-2 connected: selects CN1 connector as 5 V V_{BUS} voltage source. 2-3 connected: 5 V V_{BUS} voltage is supplied by CN3 USB connector
J4	SPD	1-2 connected: STUSB03E transceiver in low-speed mode(1) 2-3 connected: STUSB03E transceiver in full-speed mode
J5	CON, RSEL, SPD, V_{PU}	1-2 connected: V_{PU} pin in high impedance; data line pull-up resistor disconnected(1) 2-3 connected: V_{PU} pin outputs 3.3 V ±10% (data line pull-up resistor connected to internal LDO regulator output) when SPD = 1 and RSEL = 0 or when SPD = 0
J6	SUS	1-2 connected: STUSB03E transceiver active(1) 2-3 connected: STUSB03E transceiver in suspend mode
J7	RSEL	1-2 connected: internal FS pull-up resistor disabled 2-3 connected: internal FS pull-up resistor enabled
J8	OE#	1-2 connected: STUSB03E transceiver in transmit mode(1) 2-3 connected: STUSB03E transceiver in receive mode
J9	V_{BUSDET}	Connected: enables the V_{BUS} voltage detection LED. LED switches ON when voltage greater than the V_{BUSDET} threshold is detected.

1. Leave this jumper open when controlling this function using an external USB controller connected to CN2.

1.3 Connector assignments

Table 2. Demonstration board connectors

Connector	Descriptions
CN1	Power supply: V_{BUS}, V_{IF} and GND. Refer to *Table 3* for pin assignments.
CN2	Header connector for USB controller connection. Refer to *Table 4* for USB controller connections.
CN3	USB mini-B connector.

Table 3. CN1 pin assignments

Pin number	Description
1	VBUS – connect a 5 V supply voltage when powering VBUS pin from CN1
2	VIF – Interface supply voltage (1.6 V to 3.6 V)
3	Ground
4	

Table 4. CN2 pin assignments

Pin number	Description	Pin number	Description
1	V_{BUSDET}	6	VM
2	SPD	7	RCV
3	GND	8	CON
4	VP	9	OE#
5	GND	10	SUS

1.4 Test points

Table 5. Test points

Test point number	Description
1	D+ data line
2	D- data line
3	VM signal
4	VP signal
5	RCV signal
6	V_{BUSDET} signal

2 References

1. STUSB03E datasheet
2. Universal serial bus specification
3. USB engineering change notice to USB specification revision 2.0.

Appendix A STUSB03E demonstration board schematic diagram

Figure 3. Schematic diagram

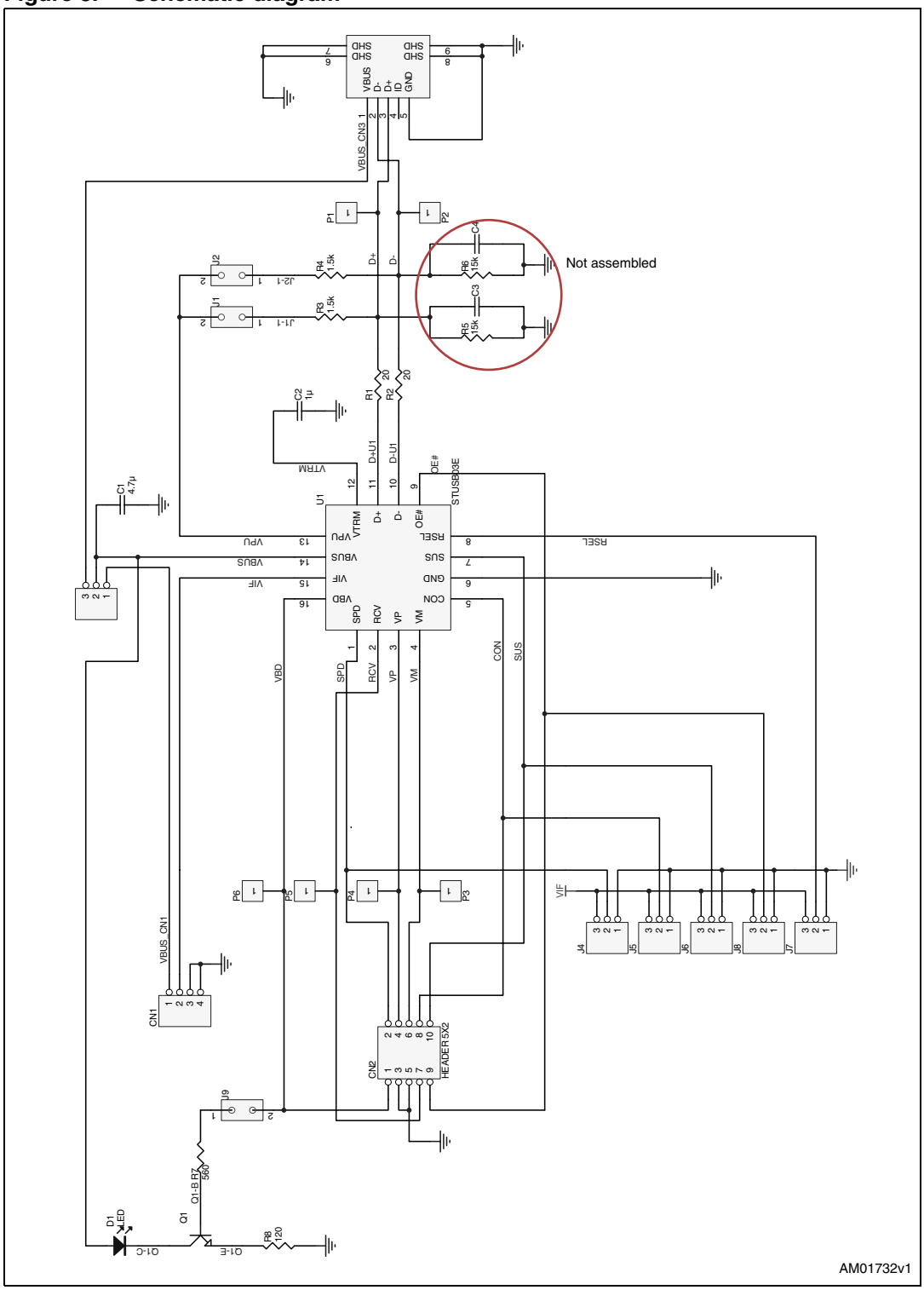

Appendix B STUSB03E demonstration board components layout

Figure 4. Demonstration board components layout

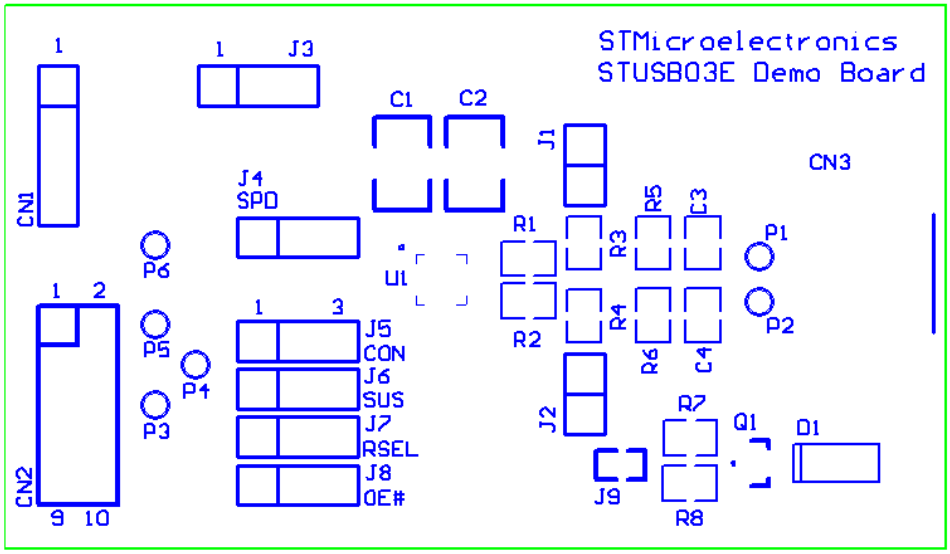

Resistors R5 and R6 and capacitors C3 and C4 can be added in order to simulate typical load conditions (Host/Hub side pull-down resistors and capacitive load).

Appendix C STUSB03E demonstration board bill of materials

Table 6. Bill of materials

Reference	Part type	Quantity	Footprint
U1	STUSB03E	1	QFN16(3x3)
C1	4,7 µF	1	1210
C2	1 µF	1	1210
R1, R2	20 Ω ±1%	2	3518
R3, R4	1,5 kΩ ±1%	2	3518
R7	560 Ω	1	3518
R8	120 Ω	1	3518
J1, J2	Jumper	2	Through hole, pitch 2.54 mm
J3-J8	Jumper	6	Through hole, pitch 2.54 mm
J9	0 Ω bridge	1	0603
P1-P2	Header 1	2	Through hole, pitch 2.54 mm
D1	KP-2012SRC-PRV	1	0805
Q1	2STR1230	1	SOT-23
CN1	Header 4	1	Through hole, pitch 2.54 mm
CN2	Header 5x2	1	Through hole, pitch 2.54 mm
CN3	MINI-B USB receptacle	1	USB mini-B, SMT

Revision history

Table 7. Document revision history

Date	Revision	Changes
18-Sept-2006	1	Initial release
04-Jun-2009	2	– Changed: *Figure 1*, *3* and *4* – Modified: *Table 1*, *6*.

Please Read Carefully:

Information in this document is provided solely in connection with ST products. STMicroelectronics NV and its subsidiaries (“ST”) reserve the right to make changes, corrections, modifications or improvements, to this document, and the products and services described herein at any time, without notice.

All ST products are sold pursuant to ST’s terms and conditions of sale.

Purchasers are solely responsible for the choice, selection and use of the ST products and services described herein, and ST assumes no liability whatsoever relating to the choice, selection or use of the ST products and services described herein.

No license, express or implied, by estoppel or otherwise, to any intellectual property rights is granted under this document. If any part of this document refers to any third party products or services it shall not be deemed a license grant by ST for the use of such third party products or services, or any intellectual property contained therein or considered as a warranty covering the use in any manner whatsoever of such third party products or services or any intellectual property contained therein.

UNLESS OTHERWISE SET FORTH IN ST’S TERMS AND CONDITIONS OF SALE ST DISCLAIMS ANY EXPRESS OR IMPLIED WARRANTY WITH RESPECT TO THE USE AND/OR SALE OF ST PRODUCTS INCLUDING WITHOUT LIMITATION IMPLIED WARRANTIES OF MERCHANTABILITY, FITNESS FOR A PARTICULAR PURPOSE (AND THEIR EQUIVALENTS UNDER THE LAWS OF ANY JURISDICTION), OR INFRINGEMENT OF ANY PATENT, COPYRIGHT OR OTHER INTELLECTUAL PROPERTY RIGHT.

UNLESS EXPRESSLY APPROVED IN WRITING BY AN AUTHORIZED ST REPRESENTATIVE, ST PRODUCTS ARE NOT RECOMMENDED, AUTHORIZED OR WARRANTED FOR USE IN MILITARY, AIR CRAFT, SPACE, LIFE SAVING, OR LIFE SUSTAINING APPLICATIONS, NOR IN PRODUCTS OR SYSTEMS WHERE FAILURE OR MALFUNCTION MAY RESULT IN PERSONAL INJURY, DEATH, OR SEVERE PROPERTY OR ENVIRONMENTAL DAMAGE. ST PRODUCTS WHICH ARE NOT SPECIFIED AS "AUTOMOTIVE GRADE" MAY ONLY BE USED IN AUTOMOTIVE APPLICATIONS AT USER’S OWN RISK.

Resale of ST products with provisions different from the statements and/or technical features set forth in this document shall immediately void any warranty granted by ST for the ST product or service described herein and shall not create or extend in any manner whatsoever, any liability of ST.

ST and the ST logo are trademarks or registered trademarks of ST in various countries.

Information in this document supersedes and replaces all information previously supplied.

The ST logo is a registered trademark of STMicroelectronics. All other names are the property of their respective owners.

© 2009 STMicroelectronics - All rights reserved

STMicroelectronics group of companies

Australia - Belgium - Brazil - Canada - China - Czech Republic - Finland - France - Germany - Hong Kong - India - Israel - Italy - Japan - Malaysia - Malta - Morocco - Philippines - Singapore - Spain - Sweden - Switzerland - United Kingdom - United States of America

www.st.com