DRV8884 具有集成电流检测功能的 1.0A 步进电机驱动器

1 特性

- 脉宽调制 (PWM) 微步进电机驱动器
  - 最高 1/16 微步进
  - 非循环和标准 ½ 步进模式
- 集成电流检测功能
  - 无需检测电阻
  - ±6.25% 满量程电流精度
- 慢速衰减和混合衰减选项
- 8.0V 至 37V 的工作电源电压范围
- 低 $R_{DS(ON)}$：24V 和 25°C 条件下为 1.4Ω HS + LS
- 高电流容量
  - 每个桥的满量程为 1.0A
  - 每个桥的均方根 (rms) 为 0.7A
- 固定的关断时间 PWM 斩波
- 简单的 STEP/DIR 接口
- 低电流休眠模式 (20μA)
- 小型封装和外形尺寸
  - 24 引脚散热薄型小外形尺寸 (HTSSOP) PowerPAD™封装
  - 28 WQFN 封装
- 保护 特性
  - VM 欠压锁定 (UVLO)
  - 电荷泵欠压 (CPUV)
  - 过流保护 (OCP)
  - 热关断 (TSD)
  - 故障条件指示引脚 (nFAULT)

2 应用

- 多功能打印机和扫描仪
- 激光束打印机
- 3D 打印机
- 自动取款机和验钞机
- 视频安保摄像机
- 办公自动化设备
- 工厂自动化和机器人

3 说明

DRV8884 器件是一款面向工业设备应用的步进电机 驱动器。此器件具有两个 N 沟道功率金属氧化物半导体场效应晶体管 (MOSFET) H 桥驱动器、一个微步进分度器以及集成电流检测功能。DRV8884 能够驱动高达 1.0A 的满量程输出电流或 0.7A rms 输出电流（采用适当的印刷电路板 (PCB) 接地层进行散热，电压为 24V，T_A = 25°C）。

DRV8884 集成了电流检测功能，消除了对两个外部检测电阻的需求。

STEP/DIR 引脚提供简单的控制接口。器件可配置为多种步进模式，从全步进模式到 1/16 步进模式。凭借专用的 nSLEEP 引脚，该器件可提供一种低功耗的休眠模式，从而实现超低静态电流待机。

该器件内置以下保护功能：欠压、电荷泵故障、过流、短路以及过热保护。故障状态通过 nFAULT 引脚指示。

器件信息(1)

器件型号	封装	封装尺寸（标称值）
DRV8884	HTSSOP (24)	7.80mm × 4.40mm
	WQFN (28)	5.50mm × 3.5mm

(1) 如需了解所有可用封装，请参阅数据表末尾的可订购产品附录。

简化原理图

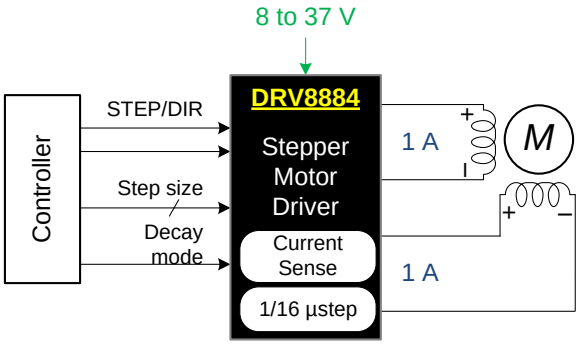

Copyright © 2016, Texas Instruments Incorporated

微步进电流波形

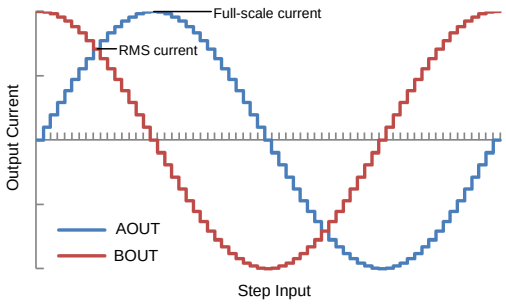

本文档旨在为方便起见，提供有关 TI 产品中文版本的信息，以确认产品的概要。 有关适用的官方英文版本的最新信息，请访问 www.ti.com，其内容始终优先。 TI 不保证翻译的准确性和有效性。 在实际设计之前，请务必参考最新版本的英文版本。

目录

1 特性 ... 1
2 应用 ... 1
3 说明 ... 1
4 修订历史记录 ... 2
5 **Pin Configuration and Functions** ... 3
6 **Specifications** ... 4
6.1 Absolute Maximum Ratings ... 4
6.2 ESD Ratings ... 4
6.3 Recommended Operating Conditions ... 5
6.4 Thermal Information ... 5
6.5 Electrical Characteristics ... 6
6.6 Indexer Timing Requirements ... 8
6.7 Typical Characteristics ... 9
7 **Detailed Description** ... 11
7.1 Overview ... 11
7.2 Functional Block Diagram ... 12
7.3 Feature Description ... 13
7.4 Device Functional Modes ... 26
8 **Application and Implementation** ... 27
8.1 Application Information ... 27
8.2 Typical Application ... 27
9 **Power Supply Recommendations** ... 30
9.1 Bulk Capacitance ... 30
10 **Layout** ... 31
10.1 Layout Guidelines ... 31
10.2 Layout Example ... 31
11 器件和文档支持 ... 32
11.1 文档支持 ... 32
11.2 接收文档更新通知 ... 32
11.3 社区资源 ... 32
11.4 商标 ... 32
11.5 静电放电警告 ... 32
11.6 术语表 ... 32
12 机械、封装和可订购信息 ... 32

4 修订历史记录

注：之前版本的页码可能与当前版本有所不同。

Changes from Revision C (July 2018) to Revision D — **Page**

- 已更改 器件状态从“预告信息”改为“生产数据” ... 1

Changes from Revision B (April 2016) to Revision C — **Page**

- 已添加 WQFN 封装选项 ... 1
- Deleted *and internal indexer* from the description of the ENABLE pin in the *Pin Functions* table ... 3
- Changed *until ENABLE is deasserted* to *until ENABLE is asserted* in the *Device Functional Modes* section ... 26
- 已添加 *接收文档更新通知*部分 ... 32

Changes from Revision A (March 2016) to Revision B — **Page**

- Updated R_{PD} and R_{PU} values ... 6
- Fixed chopping current equation ... 18
- Added "Controlling RREF with a PWM Resource" ... 18
- Fixed resistance values in tri-level input pin diagram ... 24

Changes from Original (January 2016) to Revision A — **Page**

- 已更改 器件状态“*产品预览*”至“*量产数据*” ... 1

Copyright © 2016–2018, Texas Instruments Incorporated

5 Pin Configuration and Functions

PWP PowerPAD™ Package
24-Pin HTSSOP
Top View

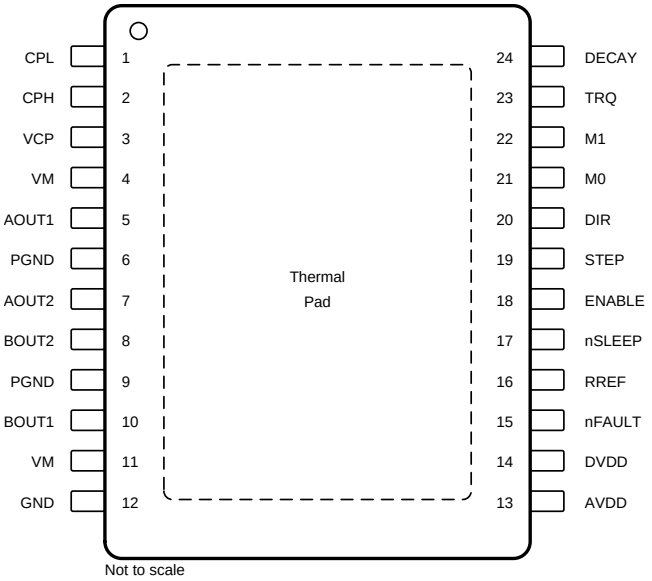

RHR Package
28-Pin WQFN With Exposed Thermal Pad
Top View

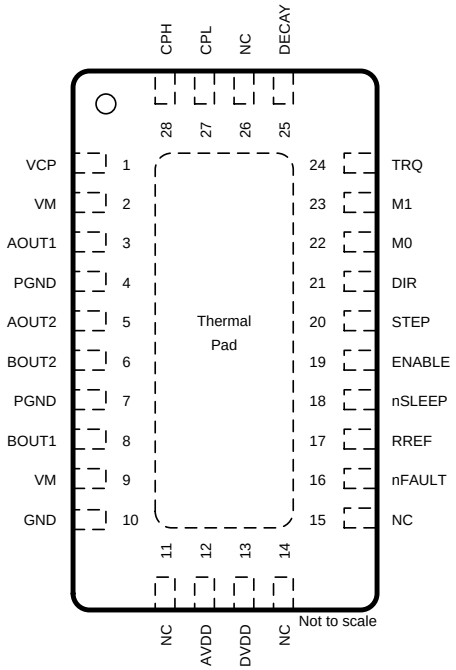

Pin Functions

PIN			TYPE(1)	DESCRIPTION
NAME	NO.			
	HTSSOP	WQFN		
AOUT1	5	3	O	Winding A output. Connect to stepper motor winding.
AOUT2	7	5		
AVDD	13	12	PWR	Internal regulator. Bypass to GND with a X5R or X7R, 0.47-µF, 6.3-V ceramic capacitor.
BOUT1	10	8	O	Winding B output. Connect to stepper motor winding.
BOUT2	8	6		
CPH	2	28	PWR	Charge pump switching node. Connect a X5R or X7R, 0.022-µF, VM-rated ceramic capacitor from CPH to CPL.
CPL	1	27		
DECAY	24	25	I	Decay-mode setting. Sets the decay mode (see the *Decay Modes* section). Decay mode can be adjusted during operation.
DIR	20	21	I	Direction input. Logic level sets the direction of stepping; internal pulldown resistor.
DVDD	14	13	PWR	Internal regulator. Bypass to GND with a X5R or X7R, 0.47-µF, 6.3-V ceramic capacitor.
ENABLE	18	19	I	Enable driver input. Logic high to enable device outputs; logic low to disable; internal pulldown resistor.
GND	12	10	PWR	Device ground. Connect to system ground.
M0	21	22	I	Microstepping mode-setting. Sets the step mode; tri-level pins; sets the step mode; internal pulldown resistor.
M1	22	23		
NC	—	11	—	No connect. No internal connection
		14		
		15		
		26		
PGND	6	4	PWR	Power ground. Connect to system ground.
	9	7		
RREF	16	17	I	Current-limit analog input. Connect a resistor to ground to set full-scale regulation current.

(1) I = input, O = output, PWR = power, OD = open-drain

Copyright © 2016–2018, Texas Instruments Incorporated

Pin Functions (continued)

PIN			TYPE (1)	DESCRIPTION
NAME	NO.			
	HTSSOP	WQFN		
STEP	19	20	I	Step input. A rising edge causes the indexer to advance one step; internal pulldown resistor.
TRQ	23	24	I	Current-scaling control. Scales the output current; tri-level pin.
VCP	3	1	PWR	Charge pump output. Connect a X5R or X7R, 0.22-µF, 16-V ceramic capacitor to VM.
VM	4	2	PWR	Power supply. Connect to motor supply voltage and bypass to GND with two 0.01-µF ceramic capacitors (one for each pin) plus a bulk capacitor rated for VM.
	11	9		
nFAULT	15	16	OD	Fault indication. Pulled logic low with fault condition; open-drain output requires an external pullup resistor.
nSLEEP	17	18	I	Sleep mode input. Logic high to enable device; logic low to enter low-power sleep mode; internal pulldown resistor.

6 Specifications

6.1 Absolute Maximum Ratings

over operating free-air temperature range (unless otherwise noted) (1)

	MIN	MAX	UNIT
Power supply voltage (VM)	–0.3	40	V
Power supply voltage ramp rate (VM)	0	2	V/µs
Charge pump voltage (VCP, CPH)	–0.3	VM + 7	V
Charge pump negative switching pin (CPL)	–0.3	VM	V
Internal regulator voltage (DVDD)	–0.3	3.8	V
Internal regulator current output (DVDD)	0	1	mA
Internal regulator voltage (AVDD)	–0.3	5.7	V
Control pin voltage (STEP, DIR, ENABLE, nFAULT, M0, M1, DECAY, TRQ, nSLEEP)	–0.3	5.7	V
Open drain output current (nFAULT)	0	10	mA
Current limit input pin voltage (RREF)	–0.3	6.0	V
Continuous phase node pin voltage (AOUT1, AOUT2, BOUT1, BOUT2)	–0.7	VM + 0.7	V
Peak drive current (AOUT1, AOUT2, BOUT1, BOUT2)		1.7	A
Operating junction temperature, T_J	–40	150	°C
Storage temperature, T_{stg}	–65	150	°C

(1) Stresses beyond those listed under *Absolute Maximum Ratings* may cause permanent damage to the device. These are stress ratings only, which do not imply functional operation of the device at these or any other conditions beyond those indicated under *Recommended Operating Conditions*. Exposure to absolute-maximum-rated conditions for extended periods may affect device reliability.

6.2 ESD Ratings

			VALUE	UNIT
$V_{(ESD)}$	Electrostatic discharge	Human-body model (HBM), per ANSI/ESDA/JEDEC JS-001 (1)	±2000	V
		Charged-device model (CDM), per JEDEC specification JESD22-C101 (2)	±500	

(1) JEDEC document JEP155 states that 500-V HBM allows safe manufacturing with a standard ESD control process.
(2) JEDEC document JEP157 states that 250-V CDM allows safe manufacturing with a standard ESD control process.

Copyright © 2016–2018, Texas Instruments Incorporated

6.3 Recommended Operating Conditions

over operating free-air temperature range (unless otherwise noted)

		MIN	MAX	UNIT
VM	Power supply voltage	8	37	V
VCC	Logic level input voltage	0	5.3	V
f_{PWM}	Applied STEP signal (STEP)	0	100 (1)	kHz
I_{DVDD}	DVDD external load current	0	1 (2)	mA
I_{FS}	Motor full scale current	0	1.0	A
I_{rms}	Motor rms current	0	0.7	A
T_A	Operating ambient temperature	–40	125	°C

(1) STEP input can operate up to 500 kHz, but system bandwidth is limited by the motor load
(2) Power dissipation and thermal limits must be observed

6.4 Thermal Information

THERMAL METRIC (1)		DRV8884		UNIT
		PWP (HTSSOP)	RHR (WQFN)	
		24 PINS	28 PINS	
$R_{\theta JA}$	Junction-to-ambient thermal resistance	36.1	33.6	°C/W
$R_{\theta JC(top)}$	Junction-to-case (top) thermal resistance	18.3	23.8	°C/W
$R_{\theta JB}$	Junction-to-board thermal resistance	15.8	12.7	°C/W
ψ_{JT}	Junction-to-top characterization parameter	0.4	0.3	°C/W
ψ_{JB}	Junction-to-board characterization parameter	15.7	12.6	°C/W
$R_{\theta JC(bot)}$	Junction-to-case (bottom) thermal resistance	1.1	3.7	°C/W

(1) For more information about traditional and new thermal metrics, see the *Semiconductor and IC Package Thermal Metrics* application report.

Copyright © 2016–2018, Texas Instruments Incorporated

6.5 Electrical Characteristics

over operating free-air temperature range (unless otherwise noted)

PARAMETER		TEST CONDITIONS	MIN	TYP	MAX	UNIT
POWER SUPPLIES (VM, DVDD, AVDD)						
VVM	VM operating voltage		8		37	V
I_{VM}	VM operating supply current	VM ≈ 8 to 35 V, ENABLE = 1, nSLEEP = 1, No motor load		5	8	mA
I_{VMQ}	VM sleep mode supply current	nSLEEP = 0; T_A = 25°C			20	µA
		nSLEEP = 0; T_A = 125°C (1)			40	
t_{SLEEP}	Sleep time	nSLEEP = 0 to sleep-mode		50	200	µs
t_{WAKE}	Wake-up time	nSLEEP = 1 to output transition		0.85	1.5	ms
t_{ON}	Turn-on time	VM > UVLO to output transition		0.85	1.5	ms
V_{DVDD}	Internal regulator voltage	0- to 1-mA external load	2.9	3.3	3.6	V
V_{AVDD}	Internal regulator voltage	No external load	4.5	5.0	5.5	V
CHARGE PUMP (VCP, CPH, CPL)						
V_{VCP}	VCP operating voltage	VM > 8 V		VM + 5.5		V
LOGIC-LEVEL INPUTS (STEP, DIR, ENABLE, nSLEEP, M1)						
V_{IL}	Input logic low voltage		0		0.8	V
V_{IH}	Input logic high voltage		1.6		5.3	V
V_{HYS}	Input logic hysteresis		100			mV
I_{IL}	Input logic low current	VIN = 0 V	–1		1	µA
I_{IH}	Input logic high current	VIN = 5.0 V			100	µA
R_{PD}	Pulldown resistance	To GND		100		kΩ
t_{PD}	Propagation delay	STEP to current change			1.2	µs
TRI-LEVEL INPUT (M0, TRQ)						
V_{IL}	Tri-level input logic low voltage		0		0.65	V
V_{IZ}	Tri-level input Hi-Z voltage			1.1		V
V_{IH}	Tri-level input logic high voltage		1.5		5.3	V
I_{IL}	Tri-level input logic low current	VIN = 0 V	–80			µA
I_{IZ}	Tri-level input Hi-Z current	VIN = 1.3 V	–5		5	µA
I_{IH}	Tri-level input logic high current	VIN = 5.0 V			155	µA
R_{PD}	Tri-level pulldown resistance	To GND	18	32	50	kΩ
R_{PU}	Tri-level pullup resistance	To DVDD	30	60	90	kΩ
QUAD-LEVEL INPUT (DECAY)						
V_{I1}	Quad-level input voltage 1	5% resistor 5 kΩ to GND	0.07	0.11	0.13	V
V_{I2}	Quad-level input voltage 2	5% resistor 15 kΩ to GND	0.24	0.32	0.40	V
V_{I3}	Quad-level input voltage 3	5% resistor 45 kΩ to GND	0.71	0.97	1.20	V
V_{I4}	Quad-level input voltage 4	5% resistor 135 kΩ to GND	2.12	2.90	3.76	V
I_O	Output current	To GND	14	22	30	µA
CONTROL OUTPUTS (nFAULT)						
V_{OL}	Output logic low voltage	I_O = 1 mA, R_{PULLUP} = 4.7 kΩ			0.5	V
I_{OH}	Output logic high leakage	V_O = 5.0 V, R_{PULLUP} = 4.7 kΩ	–1		+1	µA

(1) Not tested in production; limits are based on characterization data

Copyright © 2016–2018, Texas Instruments Incorporated

Electrical Characteristics (continued)

over operating free-air temperature range (unless otherwise noted)

PARAMETER		TEST CONDITIONS	MIN	TYP	MAX	UNIT
MOTOR DRIVER OUTPUTS (AOUT1, AOUT2, BOUT1, BOUT2)						
$R_{DS(ON)}$	High-side FET on resistance	VM = 24 V, I = 1 A, T_A = 25°C		716	798	mΩ
$R_{DS(ON)}$	Low-side FET on resistance	VM = 24 V, I = 1 A, T_A = 25°C		684	749	mΩ
t_{RISE} (2)	Output rise time			100		ns
t_{FALL} (2)	Output fall time			100		ns
t_{DEAD} (2)	Output dead time			200		ns
V_d (2)	Body diode forward voltage	I_{OUT} = 0.5 A		0.7	1.0	V
PWM CURRENT CONTROL (RREF)						
A_{RREF}	RREF transimpedance gain		28.1	30	31.9	kAΩ
V_{RREF}	RREF voltage	RREF = 27 to 132 kΩ	1.18	1.232	1.28	V
t_{OFF}	PWM off-time			20		µs
C_{RREF}	Equivalent capacitance on RREF				10	pF
t_{BLANK}	PWM blanking time	I_{RREF} = 1.0 A, 63% to 100% current setting		1.5		µs
		I_{RREF} = 1.0 A, 0% to 63% current setting		1.0		
ΔI_{TRIP}	Current trip accuracy	I_{RREF} = 1.0 A, 10% to 20% current setting, 1% reference resistor	–25%		25%	
		I_{RREF} = 1.0 A, 20% to 63% current setting, 1% reference resistor	–12.5%		12.5%	
		I_{RREF} = 1.0 A, 71% to 100% current setting, 1% reference resistor	–6.25%		6.25%	
PROTECTION CIRCUITS						
V_{UVLO}	VM UVLO	VM falling; UVLO report			7.8	V
		VM rising; UVLO recovery			8.0	
$V_{UVLO,HYS}$	Undervoltage hysteresis	Rising to falling threshold		100		mV
V_{CPUV}	Charge pump undervoltage	VCP falling; CPUV report		VM + 2.0		V
I_{OCP}	Overcurrent protection trip level	Current through any FET	1.7			A
t_{OCP}	Overcurrent deglitch time		1.3	1.9	2.8	µs
t_{RETRY}	Overcurrent retry time		1		1.6	ms
T_{TSD} (2)	Thermal shutdown temperature	Die temperature T_J	150			°C
T_{HYS} (2)	Thermal shutdown hysteresis	Die temperature T_J		20		°C

(2) Not tested in production; limits are based on characterization data

Copyright © 2016–2018, Texas Instruments Incorporated

6.6 Indexer Timing Requirements

T_A = 25°C, over recommended operating conditions unless otherwise noted

NO.			MIN	MAX	UNIT
1	f_{STEP}	Step frequency		500 (1)	kHz
2	$t_{WH(STEP)}$	Pulse duration, STEP high	970		ns
3	$t_{WL(STEP)}$	Pulse duration, STEP low	970		ns
4	$t_{SU(DIR,\ Mx)}$	Setup time, DIR or USMx to STEP rising	200		ns
5	$t_{H(DIR,\ Mx)}$	Hold time, DIR or USMx to STEP rising	200		ns

(1) STEP input can operate up to 500 kHz, but system bandwidth is limited by the motor load

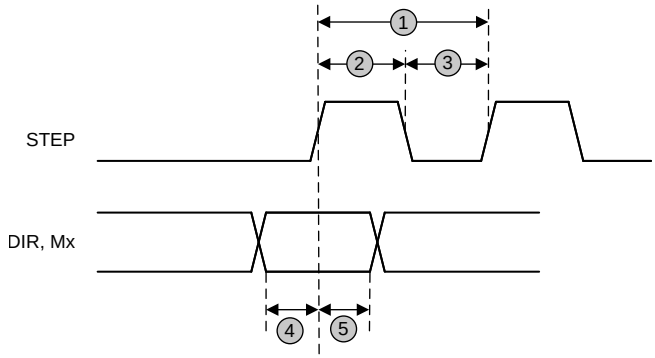

Figure 1. Timing Diagram

Copyright © 2016–2018, Texas Instruments Incorporated

6.7 Typical Characteristics

Over recommended operating conditions (unless otherwise noted)

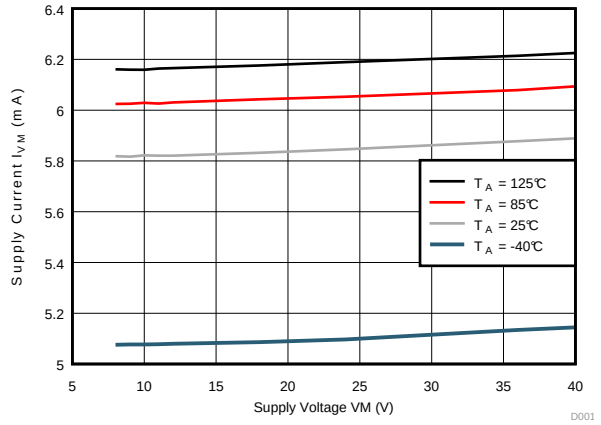

Figure 2. Supply Current over VM

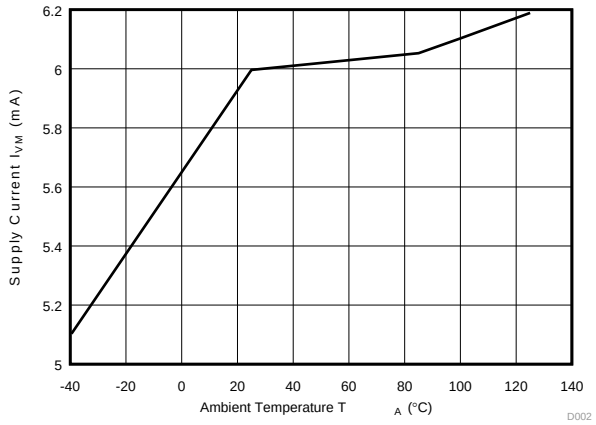

Figure 3. Supply Current over Temperature (VM = 24 V)

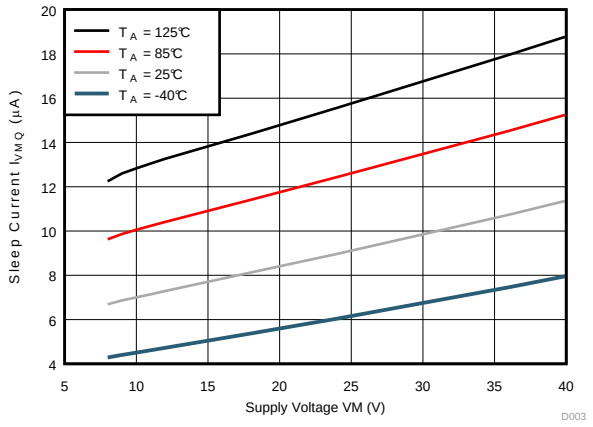

Figure 4. Sleep Current over VM

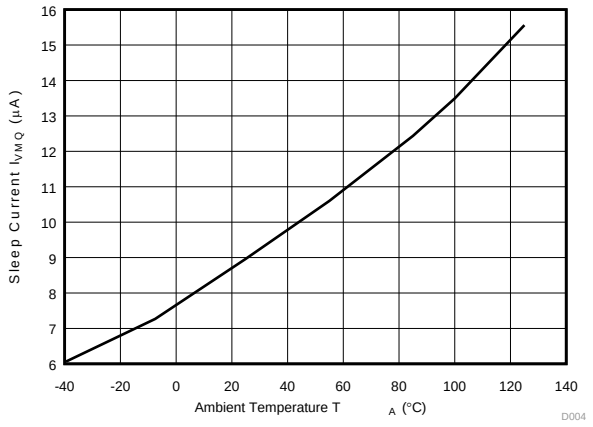

Figure 5. Sleep Current over Temperature (VM = 24 V)

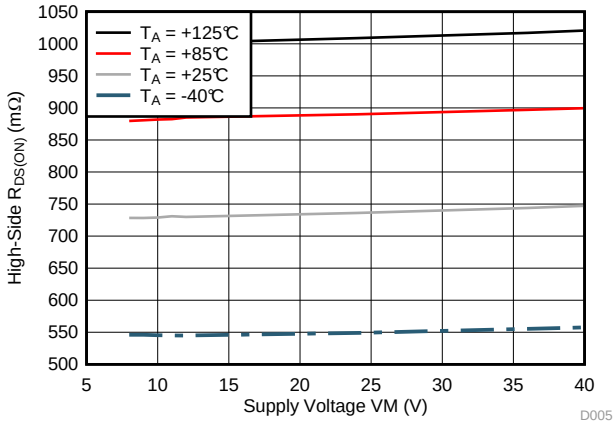

Figure 6. High-Side $R_{DS(ON)}$ over VM

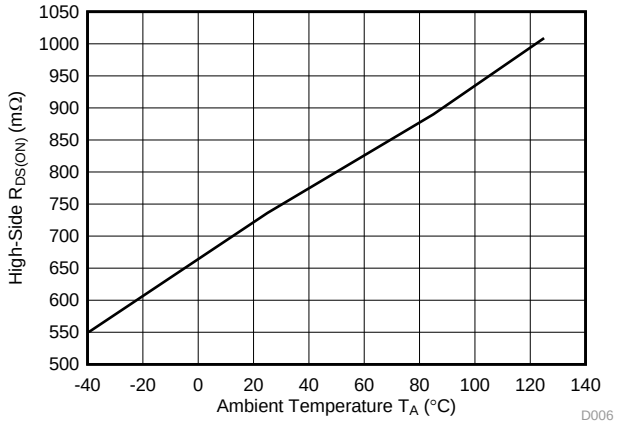

Figure 7. High-Side $R_{DS(ON)}$ over Temperature (VM = 24 V)

Copyright © 2016–2018, Texas Instruments Incorporated

Typical Characteristics (continued)

Over recommended operating conditions (unless otherwise noted)

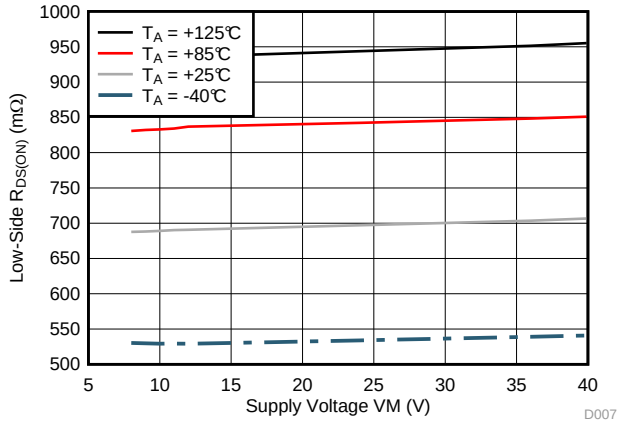

Figure 8. Low-Side $R_{DS(ON)}$ over VM

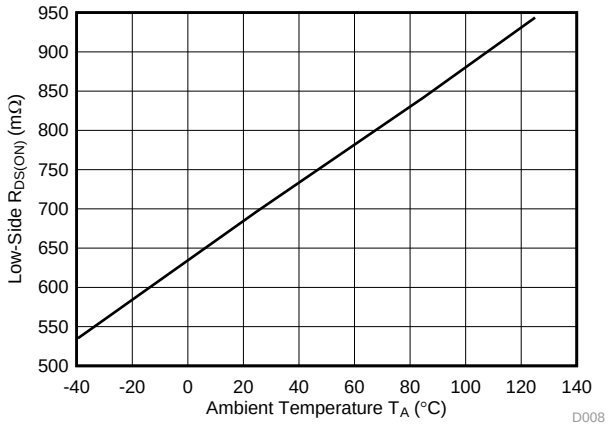

Figure 9. Low-Side $R_{DS(ON)}$ over Temperature (VM = 24 V)

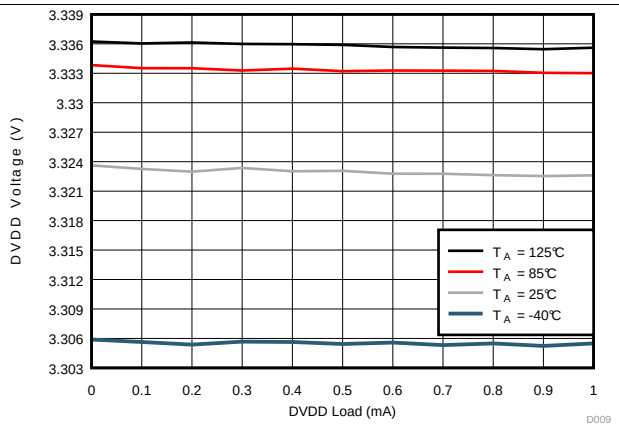

Figure 10. DVDD Regulator over Load (VM = 24 V)

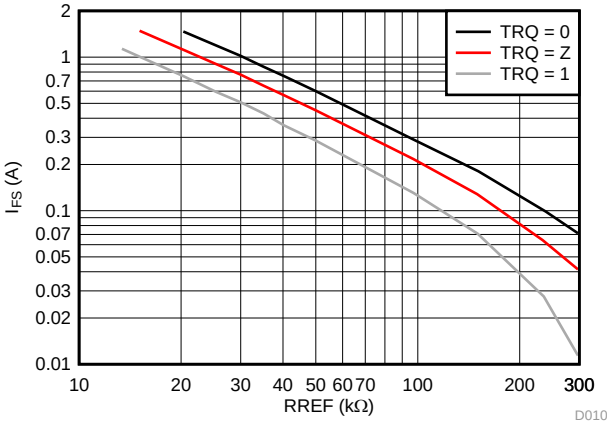

Figure 11. Full-Scale Current over RREF Selection

Copyright © 2016–2018, Texas Instruments Incorporated

7 Detailed Description

7.1 Overview

The DRV8884 is an integrated motor driver solution for bipolar stepper motors. The device integrates two NMOS H-bridges, integrated current sense and regulation circuitry, and a microstepping indexer. The DRV8884 can be powered with a supply voltage between 8 and 37 V, and is capable of providing an output current with up to 1.7-A peak, 1.0-A full-scale, or 0.7-A rms. Actual full-scale and rms current depends on ambient temperature, supply voltage, and PCB ground plane size.

The DRV8884 integrates current sense functionality, which eliminates the need for high-power external sense resistors. This integration does not dissipate the external sense resistor power, because the current sense functionality is not implemented using a resistor-based architecture. This functionality helps improve component cost, board size, PCB layout, and system power consumption.

A simple STEP/DIR interface allows easy interfacing to the controller circuit. The internal indexer is able to execute high-accuracy microstepping without requiring the processor to control the current level. The indexer is capable of full step and half step as well as microstepping to 1/4, 1/8, and 1/16. In addition to the standard half-stepping mode, a non-circular 1/2-stepping mode is available for increased torque output at higher motor rpm.

The current regulation is configurable with several decay modes of operation. The decay mode can be selected as a fixed slow, slow/mixed, or mixed decay. The slow/mixed decay mode uses slow decay on increasing steps and mixed decay on decreasing steps.

An adaptive blanking time feature automatically scales the minimum drive time with output current. This helps alleviate zero-crossing distortion by limiting the drive time at low-current steps.

A torque DAC feature allows the controller to scale the output current without needing to scale the reference resistor. The torque DAC is accessed using a digital input pin. This allows the controller to save power by decreasing the current consumption when not high current is not required.

A low-power sleep mode is included that allows the system to save power when not driving the motor.

Copyright © 2016–2018, Texas Instruments Incorporated

7.2 Functional Block Diagram

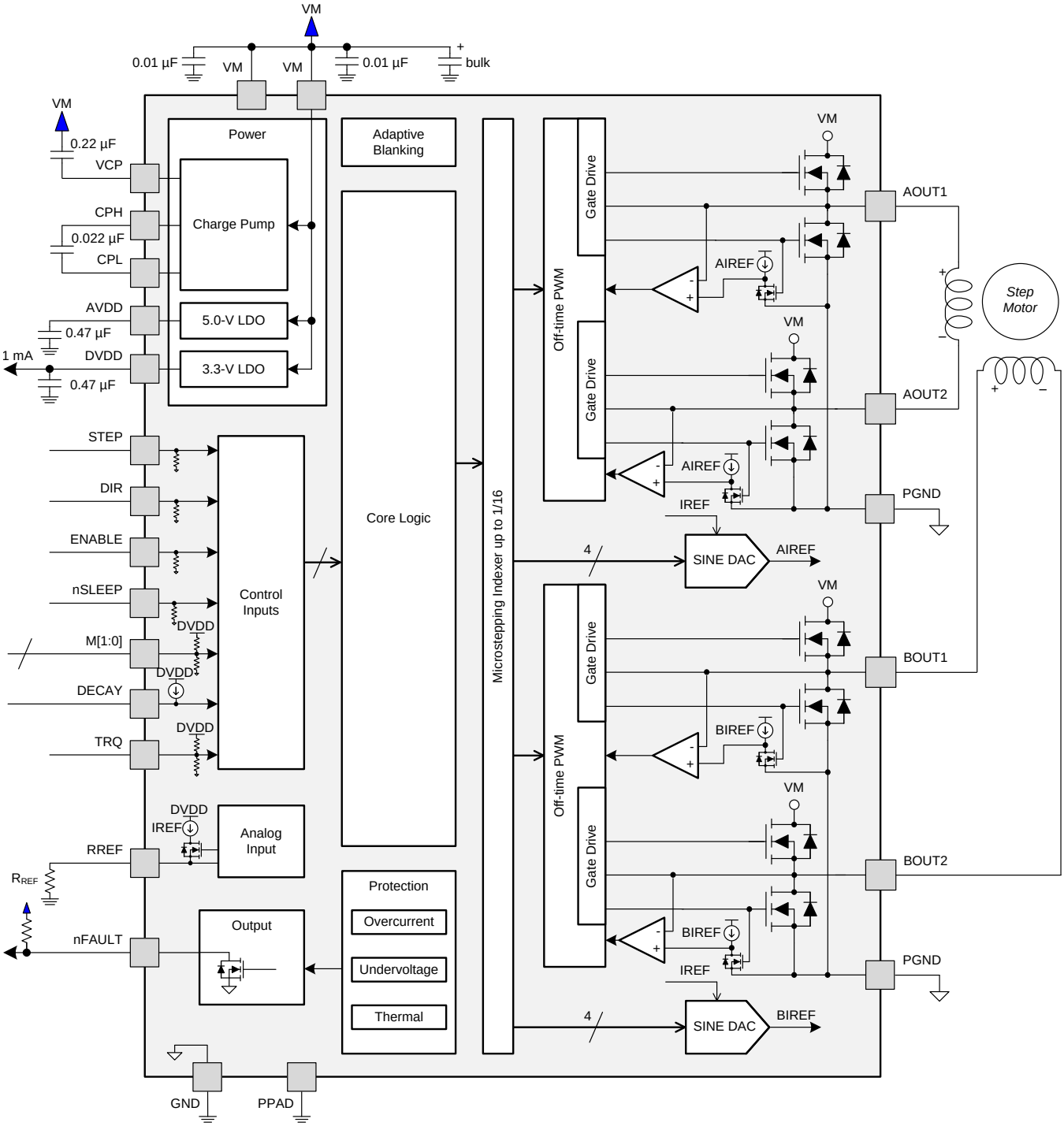

Copyright © 2016, Texas Instruments Incorporated

Copyright © 2016–2018, Texas Instruments Incorporated

7.3 Feature Description

Table 1 lists the recommended external components for the DRV8884 device.

Table 1. External Components

COMPONENT	PIN 1	PIN 2	RECOMMENDED
C_{VM}	VM	GND	Two 0.01-µF ceramic capacitors rated for VM
C_{VM}	VM	GND	Bulk electrolytic capacitor rated for VM
C_{VCP}	VCP	VM	16-V, 0.22-µF ceramic capacitor
C_{SW}	CPH	CPL	0.022-µF X7R capacitor rated for VM
C_{AVDD}	AVDD	GND	6.3-V, 0.47-µF ceramic capacitor
C_{DVDD}	DVDD	GND	6.3-V, 0.47-µF ceramic capacitor
R_{nFAULT}	VCC (1)	nFAULT	>4.7 kΩ
R_{REF}	RREF	GND	Resistor to limit chopping current must be installed. See the *Typical Application* section for value selection.

(1) VCC is not a pin on the DRV8884, but a VCC supply voltage pullup is required for open-drain output nFAULT; nFAULT may be pulled up to DVDD

7.3.1 Stepper Motor Driver Current Ratings

Stepper motor drivers can be classified using three different numbers to describe the output current: peak, rms, and full-scale.

7.3.1.1 Peak Current Rating

The peak current in a stepper driver is limited by the overcurrent protection trip threshold, I_{OCP}. The peak current describes any transient duration current pulse, for example when charging capacitance, when the overall duty cycle is very low. In general, the minimum value of I_{OCP} specifies the peak current rating of the stepper motor driver. For the DRV8884, the peak current rating is 1.7 A per bridge.

7.3.1.2 RMS Current Rating

The rms (average) current is determined by the thermal considerations of the IC. The rms current is calculated based on the $R_{DS(ON)}$, rise and fall time, PWM frequency, device quiescent current, and package thermal performance in a typical system at 25°C. The real operating rms current may be higher or lower depending on heatsinking and ambient temperature. For the DRV8884, the rms current rating is 0.7 A per bridge.

7.3.1.3 Full-Scale Current Rating

The full-scale current describes the top of the sinusoid current waveform while microstepping. Because the sinusoid amplitude is related to the rms current, the full-scale current is also determined by the thermal considerations of the IC. The full-scale current rating is approximately $\sqrt{2} \times I_{rms}$. The full-scale current is set by VREF, the sense resistor, and torque DAC when configuring the DRV8884 (see *Current Regulation* for details). For the DRV8884, the full-scale current rating is 1.0 A per bridge.

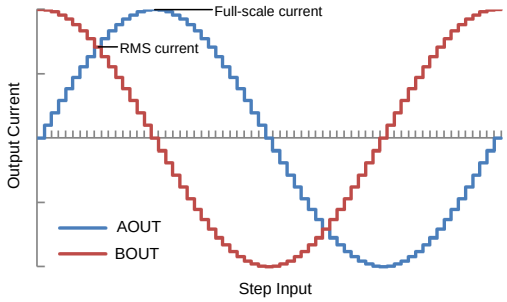

Figure 12. Full-Scale and rms Current

7.3.2 PWM Motor Drivers

The DRV8884 contains drivers for two full H-bridges. Figure 13 shows a block diagram of the circuitry.

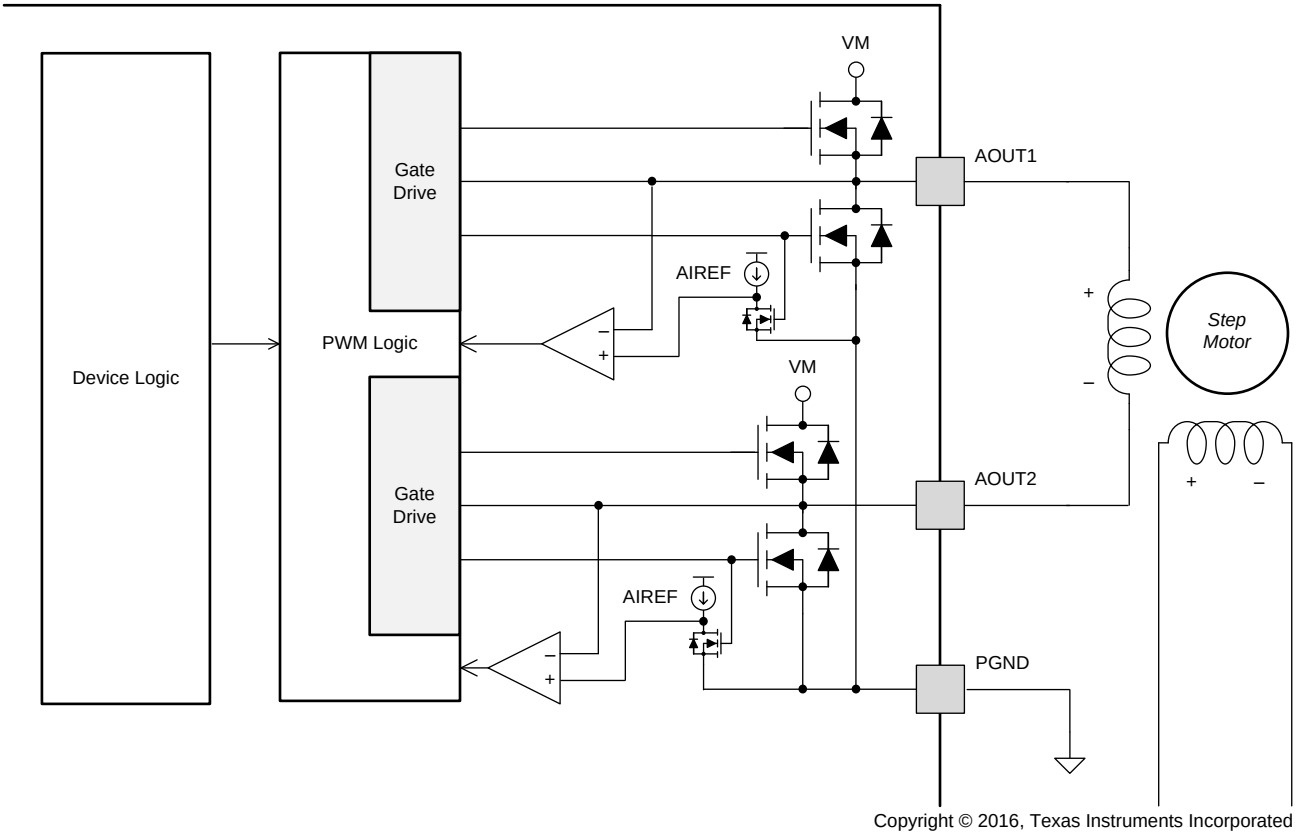

Figure 13. PWM Motor Driver Block Diagram

7.3.3 Microstepping Indexer

Built-in indexer logic in the DRV8884 allows a number of different stepping configurations. The Mx pins are used to configure the stepping format as shown in Table 2.

Table 2. Microstepping Settings

M1	M0	STEP MODE
0	0	Full step (2-phase excitation) with 71% current
0	1	1/16 step
1	0	1/2 step
1	1	1/4 step
0	Z	1/8 step
1	Z	Non-circular 1/2 step

Table 3 shows the relative current and step directions for full-step through 1/16-step operation. The AOUT current is the sine of the electrical angle; BOUT current is the cosine of the electrical angle. Positive current is defined as current flowing from xOUT1 to xOUT2 while driving.

At each rising edge of the STEP input the indexer travels to the next state in the table (see Table 3). The direction is shown with the DIR pin logic high. If the DIR pin is logic low, the sequence is reversed.

On power-up or when exiting sleep mode, keep the STEP pin logic low, otherwise the indexer will advance one step.

Copyright © 2016–2018, Texas Instruments Incorporated

Note that if the step mode is changed from full, 1/2, 1/4, 1/8, or 1/16 to full, 1/2, 1/4, 1/8, or 1/16 while stepping, the indexer will advance to the next valid state for the new MODE setting at the rising edge of STEP. If the step mode is changed from or to non-circular 1/2 step, the indexer will immediately go to the valid state for that mode.

The home state is an electrical angle of 45°. This state is entered after power-up, after exiting logic undervoltage lockout (UVLO), or after exiting sleep mode. Table 3 shows this state with the cells outlined in red.

Table 3. Microstepping Relative Current per Step (DIR = 1)

FULL STEP	1/2 STEP	1/4 STEP	1/8 STEP	1/16 STEP	ELECTRICAL ANGLE (DEGREES)	AOUT CURRENT (% FULL-SCALE)	BOUT CURRENT (% FULL-SCALE)
	1	1	1	1	0.000°	0%	100%
				2	5.625°	10%	100%
			2	3	11.250°	20%	98%
				4	16.875°	29%	96%
		2	3	5	22.500°	38%	92%
				6	28.125°	47%	88%
			4	7	33.750°	56%	83%
				8	39.375°	63%	77%
1	2	3	5	9	45.000°	71%	71%
				10	50.625°	77%	63%
			6	11	56.250°	83%	56%
				12	61.875°	88%	47%
		4	7	13	67.500°	92%	38%
				14	73.125°	96%	29%
			8	15	78.750°	98%	20%
				16	84.375°	100%	10%
	3	5	9	17	90.000°	100%	0%
				18	95.625°	100%	–10%
			10	19	101.250°	98%	–20%
				20	106.875°	96%	–29%
		6	11	21	112.500°	92%	–38%
				22	118.125°	88%	–47%
			12	23	123.750°	83%	–56%
				24	129.375°	77%	–63%
2	4	7	13	25	135.000°	71%	–71%
				26	140.625°	63%	–77%
			14	27	146.250°	56%	–83%
				28	151.875°	47%	–88%
		8	15	29	157.500°	38%	–92%
				30	163.125°	29%	–96%
			16	31	168.750°	20%	–98%
				32	174.375°	10%	–100%
	5	9	17	33	180.000°	0%	–100%
				34	185.625°	–10%	–100%
			18	35	191.250°	–20%	–98%
				36	196.875°	–29%	–96%
		10	19	37	202.500°	–38%	–92%
				38	208.125°	–47%	–88%
			20	39	213.750°	–56%	–83%
				40	219.375°	–63%	–77%

Copyright © 2016–2018, Texas Instruments Incorporated

Table 3. Microstepping Relative Current per Step (DIR = 1) (continued)

FULL STEP	1/2 STEP	1/4 STEP	1/8 STEP	1/16 STEP	ELECTRICAL ANGLE (DEGREES)	AOUT CURRENT (% FULL-SCALE)	BOUT CURRENT (% FULL-SCALE)
3	6	11	21	41	225.000°	–71%	–71%
				42	230.625°	–77%	–63%
			22	43	236.250°	–83%	–56%
				44	241.875°	–88%	–47%
		12	23	45	247.500°	–92%	–38%
				46	253.125°	–96%	–29%
			24	47	258.750°	–98%	–20%
				48	264.375°	–100%	–10%
	7	13	25	49	270.000°	–100%	0%
				50	275.625°	–100%	10%
			26	51	281.250°	–98%	20%
				52	286.875°	–96%	29%
		14	27	53	292.500°	–92%	38%
				54	298.125°	–88%	47%
			28	55	303.750°	–83%	56%
				56	309.375°	–77%	63%
4	8	15	29	57	315.000°	–71%	71%
				58	320.625°	–63%	77%
			30	59	326.250°	–56%	83%
				60	331.875°	–47%	88%
		16	31	61	337.500°	–38%	92%
				62	343.125°	–29%	96%
			32	63	348.750°	–20%	98%
				64	354.375°	–10%	100%
	1	1	1	1	360.000°	0%	100%

Non-circular 1/2–step operation is shown in Table 4. This stepping mode consumes more power than circular 1/2-step operation, but provides a higher torque at high motor rpm.

Table 4. Non-Circular 1/2-Stepping Current

NON-CIRCULAR 1/2 STEP	AOUT CURRENT (% FULL-SCALE)	BOUT CURRENT (% FULL-SCALE)	ELECTRICAL ANGLE (°)
1	0	100	0
2	100	100	45
3	100	0	90
4	100	–100	135
5	0	–100	180
6	–100	–100	225
7	–100	0	270
8	–100	100	315

Copyright © 2016–2018, Texas Instruments Incorporated

7.3.4 Current Regulation

The current through the motor windings is regulated by an adjustable fixed-off-time PWM current regulation circuit. When an H-bridge is enabled, current rises through the winding at a rate dependent on the DC voltage, inductance of the winding, and the magnitude of the back EMF present. After the current hits the current chopping threshold, the bridge enters a decay mode for a fixed 20-µs period of time to decrease the current. After the off time expires, the bridge is re-enabled, starting another PWM cycle.

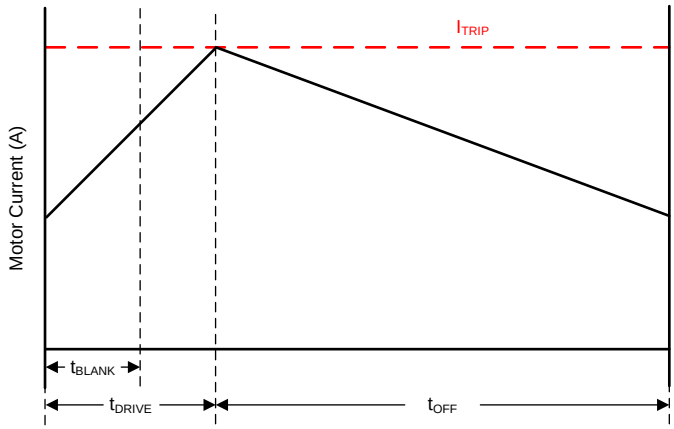

Figure 14. Current Chopping Waveform

The PWM chopping current is set by a comparator which looks at the voltage across current sense FETs in parallel with the low-side drivers. The current sense FETs are biased with a reference current that is the output of a current-mode sine-weighted DAC whose full-scale reference current is set by the current through the RREF pin. An external resistor is placed from the RREF pin to GND in order to set the reference current. In addition, the TRQ pin can further scale the reference current.

The chopping current is calculated as shown in Equation 1.

$$I_{FS}\ (A) = \frac{A_{RREF}\ (kA\Omega)}{RREF\ (k\Omega)} \times TRQ\ (\%) = \frac{30\ (kA\Omega)}{RREF\ (k\Omega)} \times TRQ\ (\%) \quad (1)$$

Example: If a 30-kΩ resistor is connected to the RREF pin, the chopping current will be 1 A (TRQ at 100%).

The TRQ pin is the input to a DAC used to scale the output current. The current scalar value for different inputs is shown in Table 5.

Table 5. Torque DAC Settings

TRQ	CURRENT SCALAR (TRQ)
0	100%
Z	75%
1	50%

Copyright © 2016–2018, Texas Instruments Incorporated

7.3.5 Controlling RREF With an MCU DAC

In some cases, the full-scale output current may need to be changed on the fly between many different values, depending on motor speed and loading. The RREF pin reference current can be adjusted in system by tying the RREF resistor to a DAC output instead of GND.

In this mode of operation, as the DAC voltage increases, the reference current will decrease, and therefore, the full-scale current will decrease as well. For proper operation, the output of the DAC should not rise above V_{RREF}.

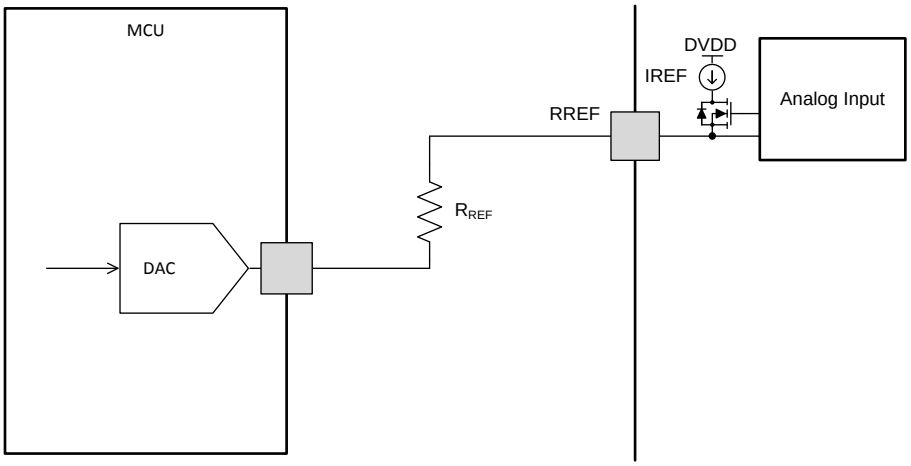

Copyright © 2016, Texas Instruments Incorporated

Figure 15. Controlling RREF With a DAC

The chopping current as controlled by a DAC is calculated as in Equation 2.

$$I_{FS}\ (A) = \frac{A_{RREF}\ (kA\Omega) \times \left[V_{RREF}\ (V) - V_{DAC}\ (V)\right]}{V_{RREF}\ (V) \times RREF\ (k\Omega)} \times TRQ\ (\%) \tag{2}$$

Example: If a 20-kΩ resistor is connected from the RREF pin to the DAC, and the DAC is outputting 0.74 V, the chopping current will be 600 mA (TRQ at 100%).

RREF can also be adjusted using a PWM signal and low-pass filter.

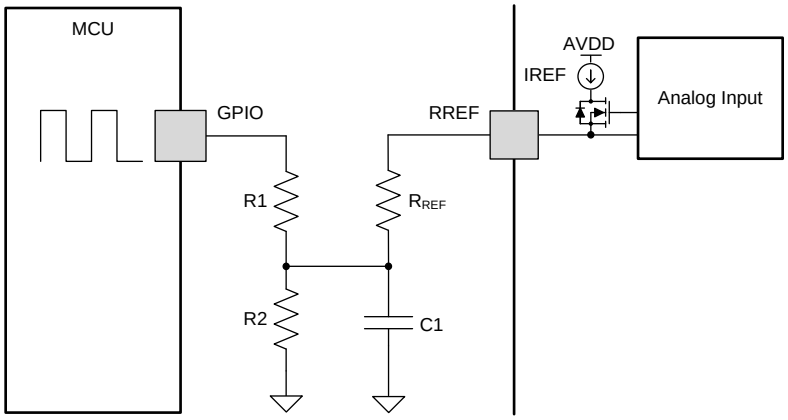

Copyright © 2016, Texas Instruments Incorporated

Figure 16. Controlling RREF with a PWM Resource

Copyright © 2016–2018, Texas Instruments Incorporated

7.3.6 Decay Modes

The DRV8884 decay mode is selected by setting the quad-level DECAY pin to the voltage range in Table 6.

Table 6. Decay Mode Settings

DECAY	INCREASING STEPS	DECREASING STEPS
100 mV Can be tied to ground	Slow decay	Mixed decay: 30% fast
300 mV, 15 kΩ to GND	Mixed decay: 30% fast	Mixed decay: 30% fast
1.0 V, 45 kΩ to GND	Mixed decay: 60% fast	Mixed decay: 60% fast
2.9 V Can be tied to DVDD	Slow decay	Slow decay

Increasing and decreasing current are defined in Figure 17. For the slow/mixed decay mode, the decay mode is set as slow during increasing current steps and mixed decay during decreasing current steps. In full-step mode, the decreasing steps decay mode is always used.

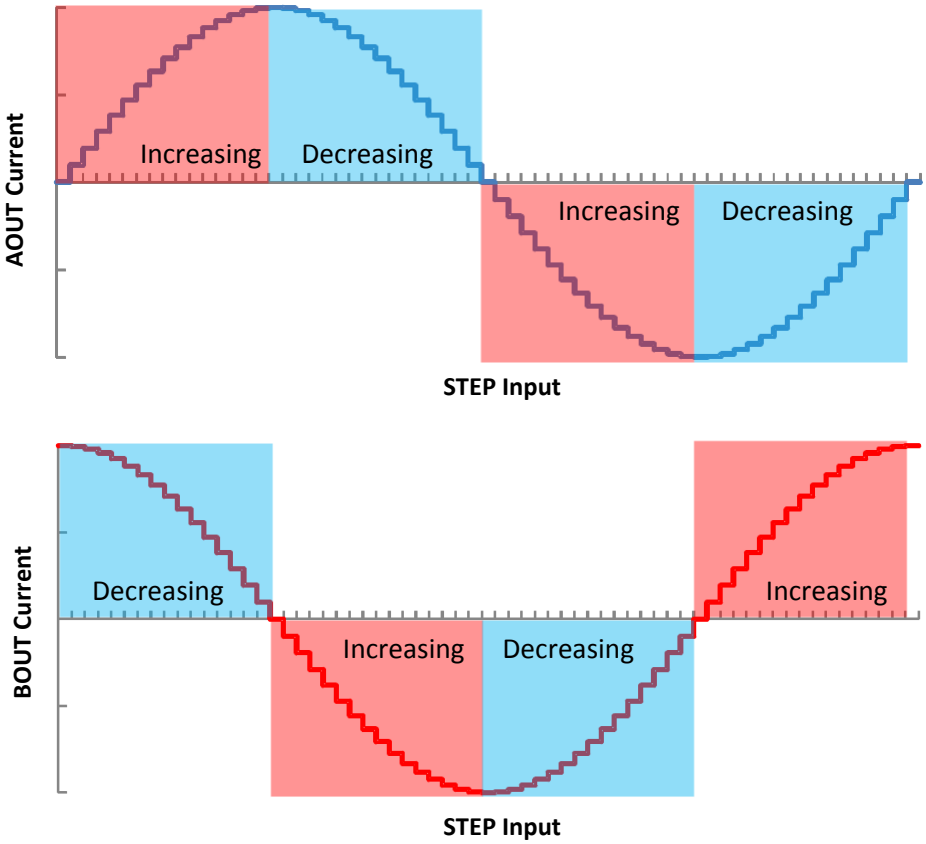

Figure 17. Definition of Increasing and Decreasing Steps

7.3.6.1 Mode 1: Slow Decay for Increasing and Decreasing Current

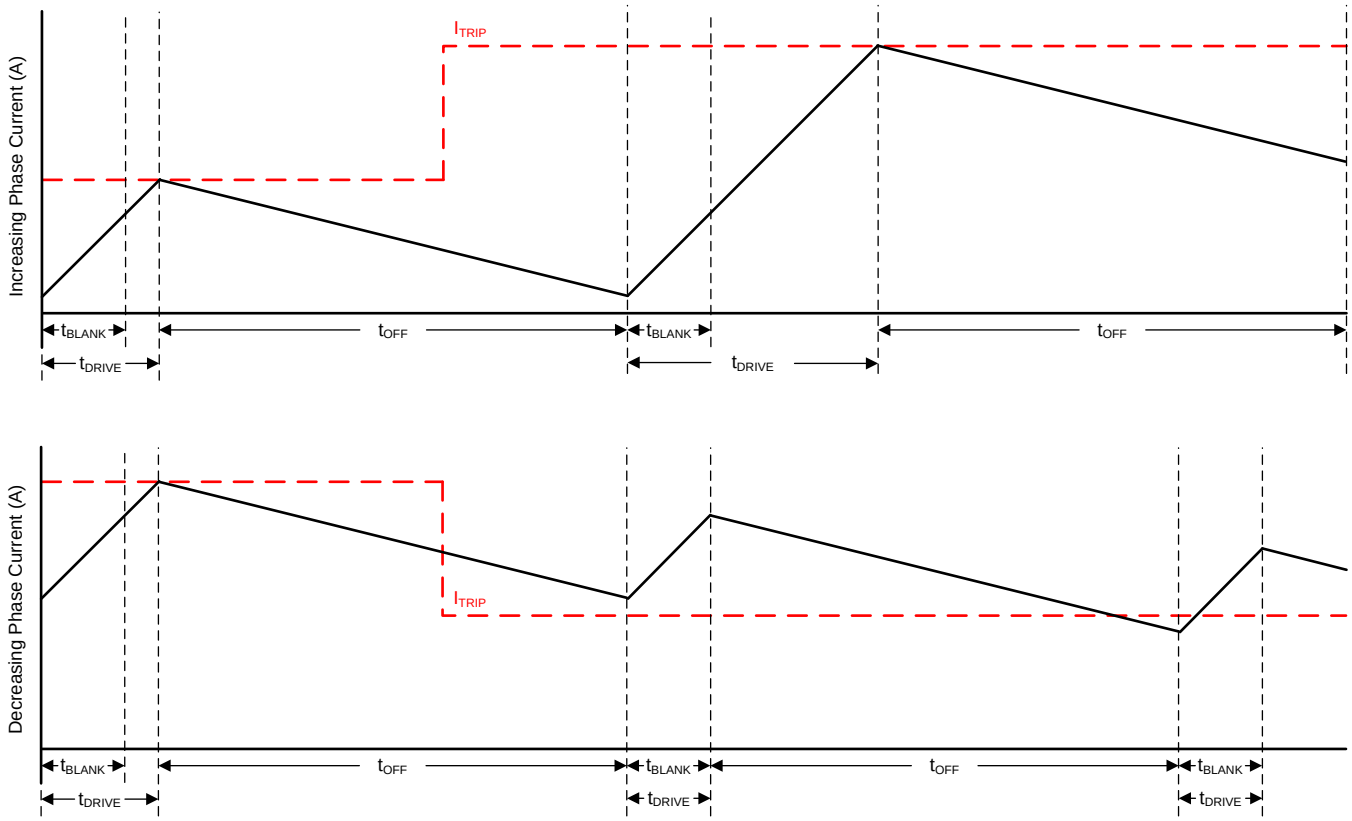

Figure 18. Slow/Slow Decay Mode

During slow decay, both of the low-side FETs of the H-bridge are turned on, allowing the current to be recirculated.

Slow decay exhibits the least current ripple of the decay modes for a given t_{OFF}. However, on decreasing current steps, slow decay takes a long time to settle to the new I_{TRIP} level because the current decreases very slowly.

Copyright © 2016–2018, Texas Instruments Incorporated

7.3.6.2 Mode 2: Slow Decay for Increasing Current, Mixed Decay for Decreasing Current

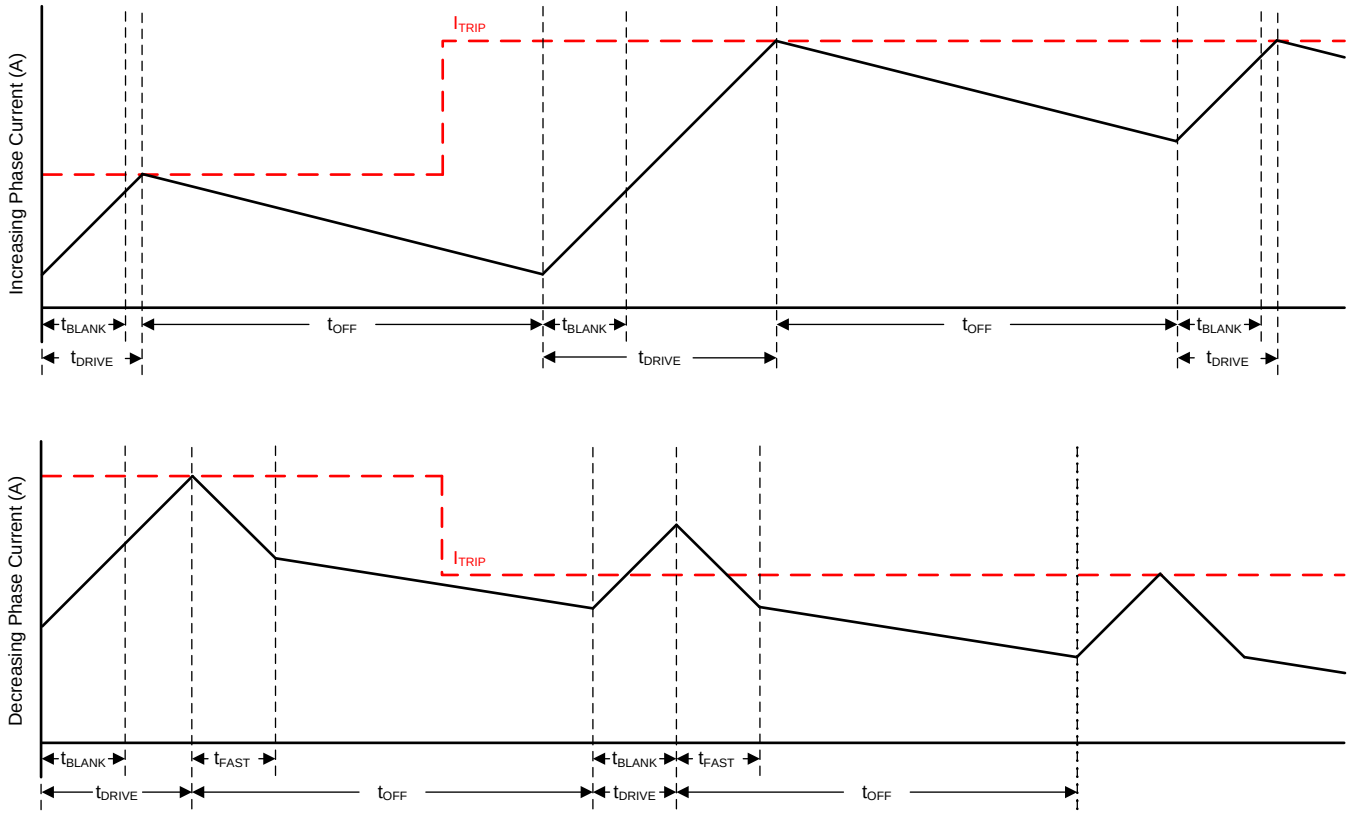

Figure 19. Slow/Mixed Decay Mode

Mixed decay begins as fast decay for a time, followed by slow decay for the remainder of t_{OFF}. In this mode, mixed decay only occurs during decreasing current. Slow decay is used for increasing current.

This mode exhibits the same current ripple as slow decay for increasing current, since for increasing current, only slow decay is used. For decreasing current, the ripple is larger than slow decay, but smaller than fast decay. On decreasing current steps, mixed decay settles to the new I_{TRIP} level faster than slow decay.

7.3.6.3 Mode 3: Mixed Decay for Increasing and Decreasing Current

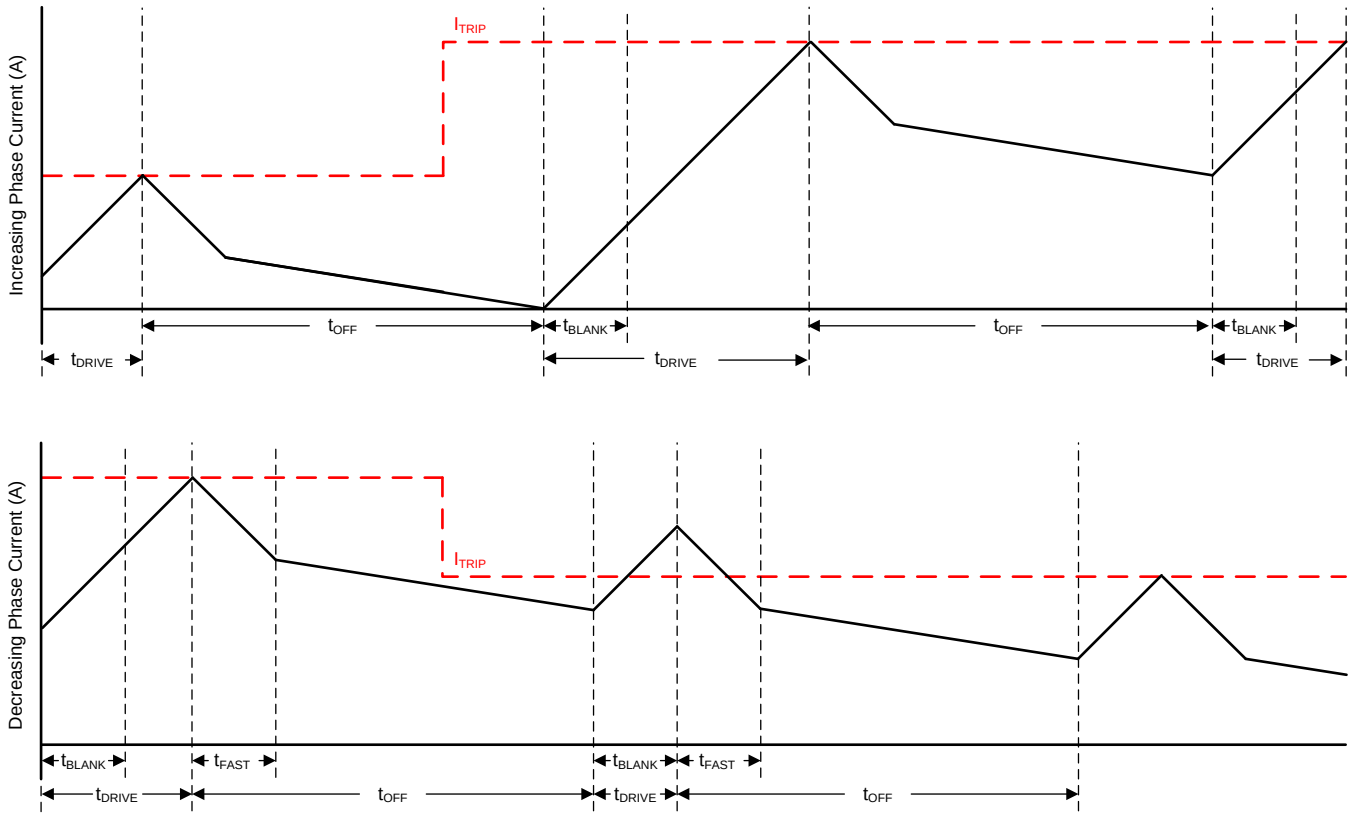

Figure 20. Mixed/Mixed Decay Mode

Mixed decay begins as fast decay for a time, followed by slow decay for the remainder of t_{OFF}. In this mode, mixed decay occurs for both increasing and decreasing current steps.

This mode exhibits ripple larger than slow decay, but smaller than fast decay. On decreasing current steps, mixed decay settles to the new I_{TRIP} level faster than slow decay.

In cases where current is held for a long time (no input in the STEP pin) or at very low stepping speeds, slow decay may not properly regulate current because no back-EMF is present across the motor windings. In this state, motor current can rise very quickly, and requires an excessively large off-time. Increasing/decreasing mixed decay mode allows the current level to stay in regulation when no back-EMF is present across the motor windings.

Copyright © 2016–2018, Texas Instruments Incorporated

7.3.7 Blanking Time

After the current is enabled in an H-bridge, the current sense comparator is ignored for a period of time (t_{BLANK}) before enabling the current sense circuitry. Note that the blanking time also sets the minimum drive time of the PWM. Table 7 shows the blanking time based on the sine table index and the torque DAC setting. Note that the torque DAC index is not the same as one step as given in Table 3.

Table 7. Adaptive Blanking Time over Torque DAC and Microsteps

t_{blank} = 1.5 µs	t_{blank} = 1.0 µs

SINE INDEX	TORQUE DAC (TRQ)		
	100%	75%	50%
16	100%	75%	50%
15	98%	73.5	49%
14	96%	72%	48%
13	92%	69%	46%
12	88%	66%	44%
11	83%	62.3%	41.5%
10	77%	57.8%	38.5%
9	71%	53.3%	35.5%
8	63%	47.3%	31.5%
7	56%	42%	28%
6	47%	35.3	23.5%
5	38%	28.5	19%
4	29%	21.8%	14.5%
3	20%	15%	10%
2	10%	7.5%	5%
1	0%	0%	0%

7.3.8 Charge Pump

A charge pump is integrated in order to supply a high-side NMOS gate drive voltage. The charge pump requires a capacitor between the VM and VCP pins. Additionally, a low-ESR ceramic capacitor is required between pins CPH and CPL.

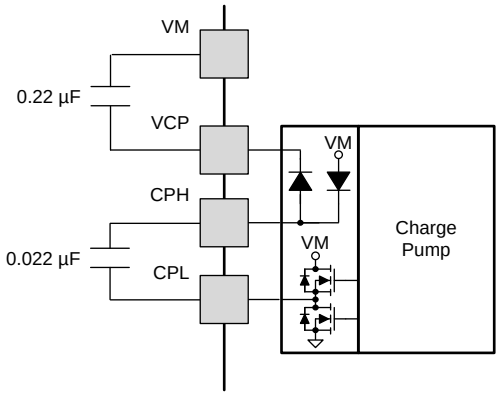

Copyright © 2016, Texas Instruments Incorporated

Figure 21. Charge Pump Diagram

7.3.9 LDO Voltage Regulator

An LDO regulator is integrated into the DRV8884. DVDD can be used to provide a reference voltage. For proper operation, bypass DVDD to GND using a ceramic capacitor.

The DVDD output is nominally 3.3 V. When the DVDD LDO current load exceeds 1 mA, the output voltage drops significantly.

The AVDD pin also requires a bypass capacitor to GND. This LDO is for DRV8884 internal use only.

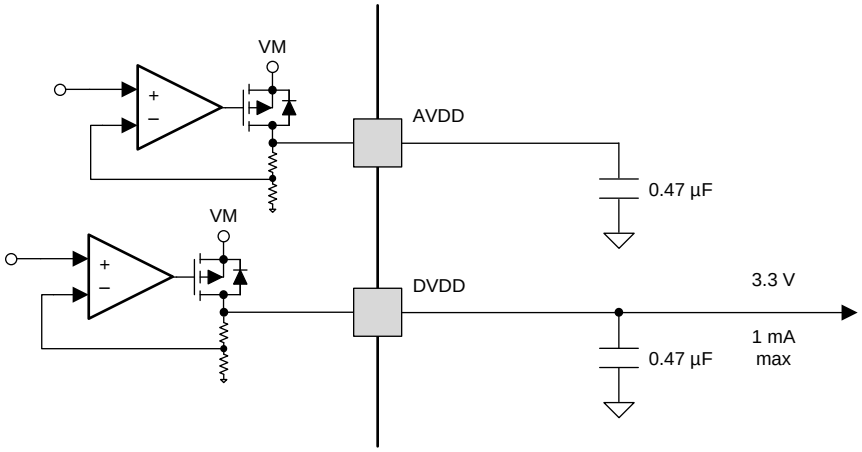

Copyright © 2016, Texas Instruments Incorporated

Figure 22. LDO Diagram

If a digital input needs to be tied permanently high (that is, Mx, DECAY, or TRQ), it is preferable to tie the input to DVDD instead of an external regulator. This saves power when VM is not applied or in sleep mode; DVDD is disabled and current will not be flowing through the input pulldown resistors. For reference, logic level inputs have a typical pulldown of 100 kΩ, and tri-level inputs have a typical pulldown of 60 kΩ.

7.3.10 Logic and Multi-Level Pin Diagrams

Figure 23 gives the input structure for logic-level pins STEP, DIR, ENABLE, nSLEEP, and M1.

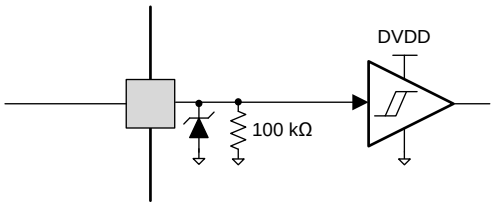

Figure 23. Logic-level Input Pin Diagram

Tri-level logic pins M0 and TRQ have the following structure shown in Figure 24.

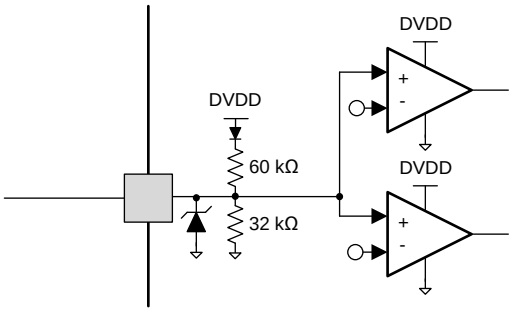

Figure 24. Tri-level Input Pin Diagram

Copyright © 2016–2018, Texas Instruments Incorporated

Quad-level logic pin DECAY has the following structure shown in Figure 25.

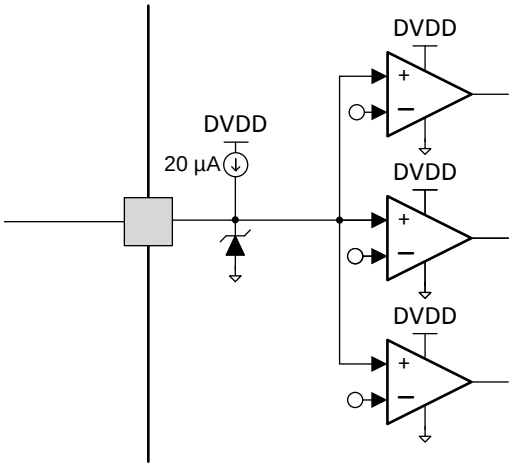

Figure 25. Quad-level Input Pin Diagram

7.3.11 Protection Circuits

The DRV8884 is fully protected against undervoltage, charge pump undervoltage, overcurrent, and overtemperature events.

7.3.11.1 VM UVLO

If at any time the voltage on the VM pin falls below the VM UVLO threshold voltage (V_{UVLO}), all FETs in the H-bridge will be disabled, the charge pump will be disabled, the logic will be reset, the DVDD regulator is disabled, and the nFAULT pin will be driven low. Operation resumes when VM rises above the UVLO threshold. The nFAULT pin is released after operation has resumed. Decreasing VM below this undervoltage threshold will reset the indexer position.

7.3.11.2 VCP Undervoltage Lockout (CPUV)

If at any time the voltage on the VCP pin falls below the charge pump UVLO threshold voltage, all FETs in the H-bridge will be disabled and the nFAULT pin will be driven low. Operation resumes when VCP rises above the CPUV threshold. The nFAULT pin is released after operation has resumed.

7.3.11.3 Overcurrent Protection (OCP)

An analog current limit circuit on each FET limits the current through the FET by removing the gate drive. If this analog current limit persists for longer than t_{OCP}, all FETs in the H-bridge will be disabled and nFAULT will be driven low.

The driver is re-enabled after the OCP retry period (t_{RETRY}) has passed. nFAULT becomes high again after the retry time. If the fault condition is still present, the cycle repeats. If the fault is no longer present, normal operation resumes and nFAULT remains deasserted.

7.3.11.4 Thermal Shutdown (TSD)

If the die temperature exceeds safe limits, all FETs in the H-bridge will be disabled and the nFAULT pin will be driven low. After the die temperature has fallen to a safe level, operation automatically resumes. The nFAULT pin is released after operation has resumed.

Table 8. Fault Condition Summary

FAULT	CONDITION	ERROR REPORT	H-BRIDGE	CHARGE PUMP	INDEXER	DVDD	RECOVERY
VM undervoltage (UVLO)	VM < V_{UVLO} (max 7.8 V)	nFAULT	Disabled	Disabled	Disabled	Disabled	VM > V_{UVLO} (max 8.0 V)

Table 8. Fault Condition Summary (continued)

FAULT	CONDITION	ERROR REPORT	H-BRIDGE	CHARGE PUMP	INDEXER	DVDD	RECOVERY
VCP undervoltage (CPUV)	VCP < V_{CPUV} (typ VM + 2.0 V)	nFAULT	Disabled	Operating	Operating	Operating	VCP > V_{CPUV} (typ VM + 2.7 V)
Overcurrent (OCP)	I_{OUT} > I_{OCP} (min 1.7 A)	nFAULT	Disabled	Operating	Operating	Operating	t_{RETRY}
Thermal Shutdown (TSD)	T_J > T_{TSD} (min 150°C)	nFAULT	Disabled	Operating	Operating	Operating	T_J < T_{TSD} – T_{HYS} (T_{HYS} typ 20°C)

7.4 Device Functional Modes

The DRV8884 is active unless the nSLEEP pin is brought logic low. In sleep mode, the charge pump is disabled, the H-bridge FETs are disabled Hi-Z, and the V3P3 regulator is disabled. Note that t_{SLEEP} must elapse after a falling edge on the nSLEEP pin before the device is in sleep mode. The DRV8884 is brought out of sleep mode automatically if nSLEEP is brought logic high. Note that t_{WAKE} must elapse before the outputs change state after wake-up.

TI recommends to keep the STEP pin logic low when coming out of nSLEEP or when applying power.

If the ENABLE pin is brought logic low, the H-bridge outputs are disabled, but the internal logic will still be active. A rising edge on STEP will advance the indexer, but the outputs will not change state until ENABLE is asserted.

Table 9. Functional Modes Summary

CONDITION		H-BRIDGE	CHARGE PUMP	INDEXER	V3P3
Operating	8 V < VM < 40 V nSLEEP pin = 1 ENABLE pin = 1	Operating	Operating	Operating	Operating
Disabled	8 V < VM < 40 V nSLEEP pin = 1 ENABLE pin = 0	Disabled	Operating	Operating	Operating
Sleep mode	8 V < VM < 40 nSLEEP pin = 0	Disabled	Disabled	Disabled	Disabled
Fault encountered	VM undervoltage (UVLO)	Disabled	Disabled	Disabled	Disabled
	VCP undervoltage (CPUV)	Disabled	Operating	Operating	Operating
	Overcurrent (OCP)	Disabled	Operating	Operating	Operating
	Thermal shutdown (TSD)	Disabled	Operating	Operating	Operating

Copyright © 2016–2018, Texas Instruments Incorporated

8 Application and Implementation

NOTE

Information in the following applications sections is not part of the TI component specification, and TI does not warrant its accuracy or completeness. TI's customers are responsible for determining suitability of components for their purposes. Customers should validate and test their design implementation to confirm system functionality.

8.1 Application Information

The DRV8884 is used in bipolar stepper control.

8.2 Typical Application

The following design procedure can be used to configure the DRV8884.

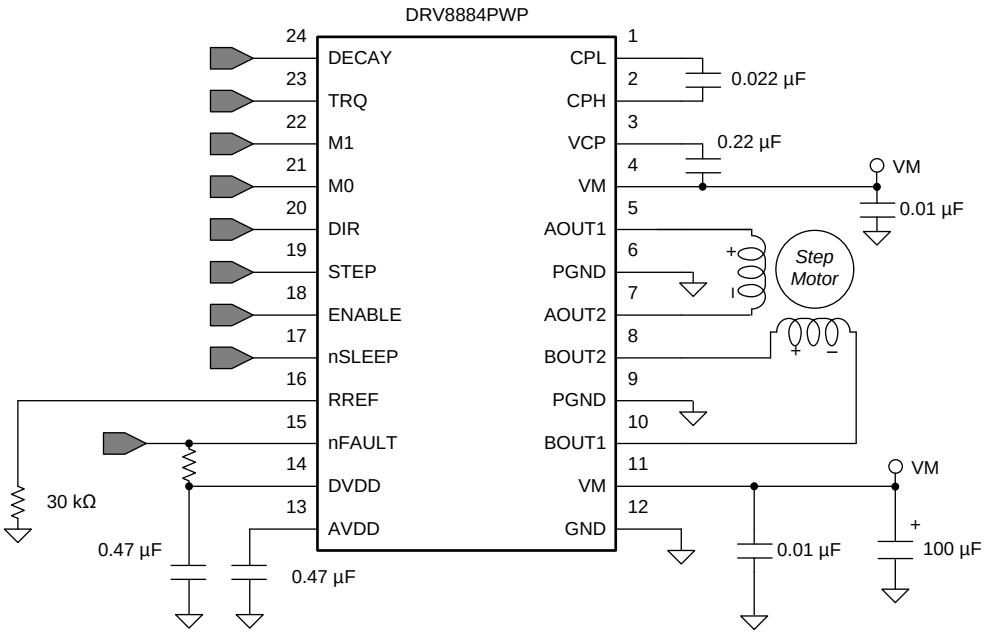

Copyright © 2016, Texas Instruments Incorporated

Figure 26. Typical Application Schematic

8.2.1 Design Requirements

Table 10 gives design input parameters for system design.

Table 10. Design Parameters

DESIGN PARAMETER	REFERENCE	EXAMPLE VALUE
Supply voltage	VM	24 V
Motor winding resistance	R_L	2.6 Ω/phase
Motor winding inductance	L_L	1.4 mH/phase
Motor full step angle	θ_{step}	1.8°/step
Target microstepping level	n_m	1/8 step
Target motor speed	v	120 rpm
Target full-scale current	I_{FS}	1.0 A

8.2.2 Detailed Design Procedure

8.2.2.1 Stepper Motor Speed

The first step in configuring the DRV8884 requires the desired motor speed and microstepping level. If the target application requires a constant speed, then a square wave with frequency f_{step} must be applied to the STEP pin.

If the target motor speed is too high, the motor will not spin. Make sure that the motor can support the target speed.

For a desired motor speed (v), microstepping level (n_m), and motor full step angle (θ_{step}),

$$f_{step}\ (\text{steps / s}) = \frac{v\ (\text{rpm}) \times 360\ (^\circ / \text{rot})}{\theta_{step}\ (^\circ / \text{step}) \times n_m\ (\text{steps / microstep}) \times 60\ (\text{s / min})} \tag{3}$$

θ_{step} can be found in the stepper motor data sheet, or written on the motor itself.

For the DRV8884, the microstepping level is set by the Mx pins and can be any of the settings in Table 11. Higher microstepping will mean a smother motor motion and less audible noise, but will increase switching losses and require a higher f_{step} to achieve the same motor speed.

Table 11. Microstepping Indexer Settings

M1	M0	STEP MODE
0	0	Full step (2-phase excitation) with 71% current
0	1	1/16 step
1	0	1/2 step
1	1	1/4 step
0	Z	1/8 step
1	Z	Non-circular 1/2 step

Example: Target 120 rpm at 1/8 microstep mode. The motor is 1.8°/step

$$f_{step}\ (\text{steps / s}) = \frac{120\ \text{rpm} \times 360^\circ / \text{rot}}{1.8^\circ / \text{step} \times 1/8\ \text{steps / microstep} \times 60\ \text{s / min}} = 3.2\ \text{kHz} \tag{4}$$

8.2.2.2 Current Regulation

In a stepper motor, the full-scale current (I_{FS}) is the maximum current driven through either winding. This quantity will depend on the RREF resistor and the TRQ setting. During stepping, I_{FS} defines the current chopping threshold (I_{TRIP}) for the maximum current step.

$$I_{FS}\ (\text{A}) = \frac{A_{RREF}\ (\text{kA}\Omega)}{\text{RREF}\ (\text{k}\Omega)} = \frac{30\ (\text{kA}\Omega) \times \text{TRQ}\%}{\text{RREF}\ (\text{k}\Omega)} \tag{5}$$

Note that I_{FS} must also follow Equation 6 in order to avoid saturating the motor. VM is the motor supply voltage, and R_L is the motor winding resistance.

$$I_{FS}\ (\text{A}) < \frac{\text{VM}\ (\text{V})}{R_L\ (\Omega) + 2 \times R_{DS(ON)}\ (\Omega)} \tag{6}$$

8.2.2.3 Decay Modes

The DRV8884 supports three different decay modes: slow decay, slow/mixed and all mixed decay. The current through the motor windings is regulated using an adjustable fixed-time-off scheme. This means that after any drive phase, when a motor winding current has hit the current chopping threshold (I_{TRIP}), the DRV8884 will place the winding in one of the three decay modes for t_{OFF}. After t_{OFF}, a new drive phase starts.

The blanking time t_{BLANK} defines the minimum drive time for the PWM current chopping. I_{TRIP} is ignored during t_{BLANK}, so the winding current may overshoot the trip level.

Copyright © 2016–2018, Texas Instruments Incorporated

8.2.3 Application Curves

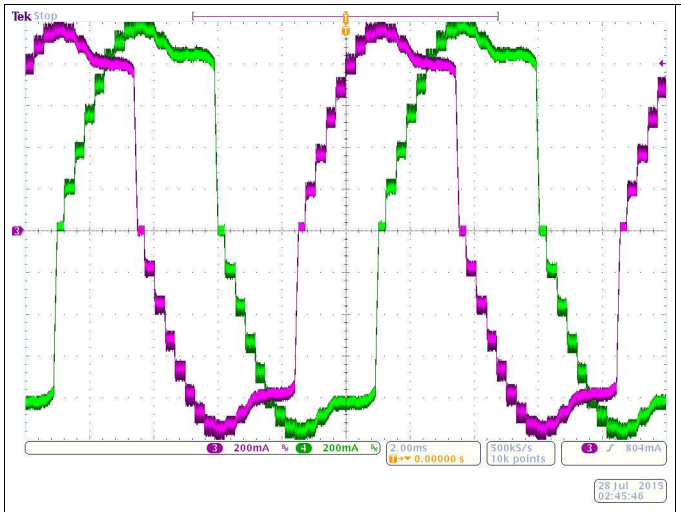

Figure 27. Microstepping Using Slow Decay on Increasing and Decreasing Steps; Current Loses Regulation on Falling Steps

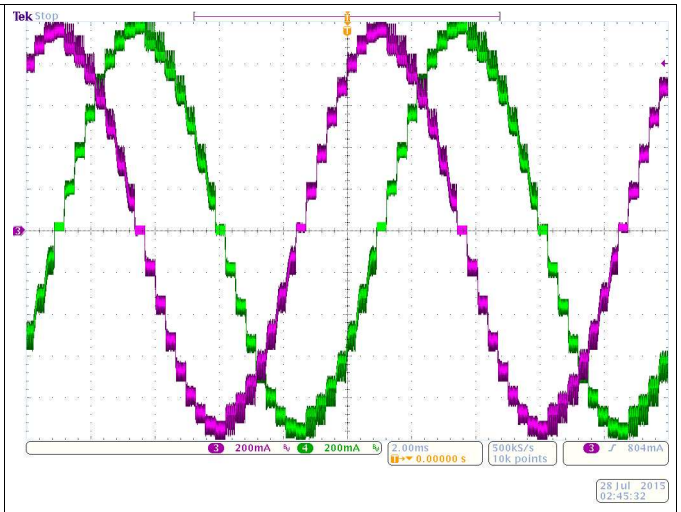

Figure 28. Microstepping Using Slow Decay on Increasing Steps and Mixed 30% Fast Decay on Decreasing Steps

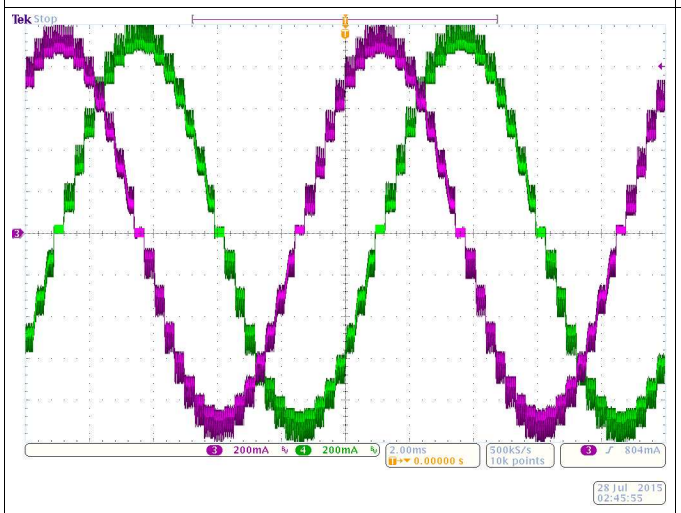

Figure 29. Microstepping Using Mixed 30% Fast Decay on Increasing and Decreasing Steps

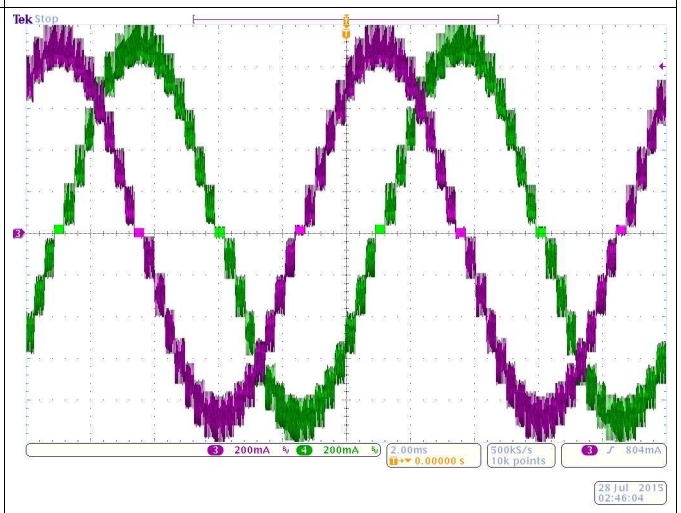

Figure 30. Microstepping Using Mixed 60% Fast Decay on Increasing and Decreasing Steps

9 Power Supply Recommendations

The DRV8884 is designed to operate from an input voltage supply (VM) range between 8 and 35 V. A 0.01-µF ceramic capacitor rated for VM must be placed at each VM pin as close to the DRV8884 as possible. In addition, a bulk capacitor must be included on VM.

9.1 Bulk Capacitance

Having appropriate local bulk capacitance is an important factor in motor drive system design. It is generally beneficial to have more bulk capacitance, while the disadvantages are increased cost and physical size.

The amount of local capacitance needed depends on a variety of factors, including:

- The highest current required by the motor system
- The power supply's capacitance and ability to source current
- The amount of parasitic inductance between the power supply and motor system
- The acceptable voltage ripple
- The type of motor used (brushed DC, brushless DC, stepper)
- The motor braking method

The inductance between the power supply and motor drive system will limit the rate current can change from the power supply. If the local bulk capacitance is too small, the system will respond to excessive current demands or dumps from the motor with a change in voltage. When adequate bulk capacitance is used, the motor voltage remains stable and high current can be quickly supplied.

The data sheet generally provides a recommended value, but system-level testing is required to determine the appropriate sized bulk capacitor.

The voltage rating for bulk capacitors should be higher than the operating voltage, to provide margin for cases when the motor transfers energy to the supply.

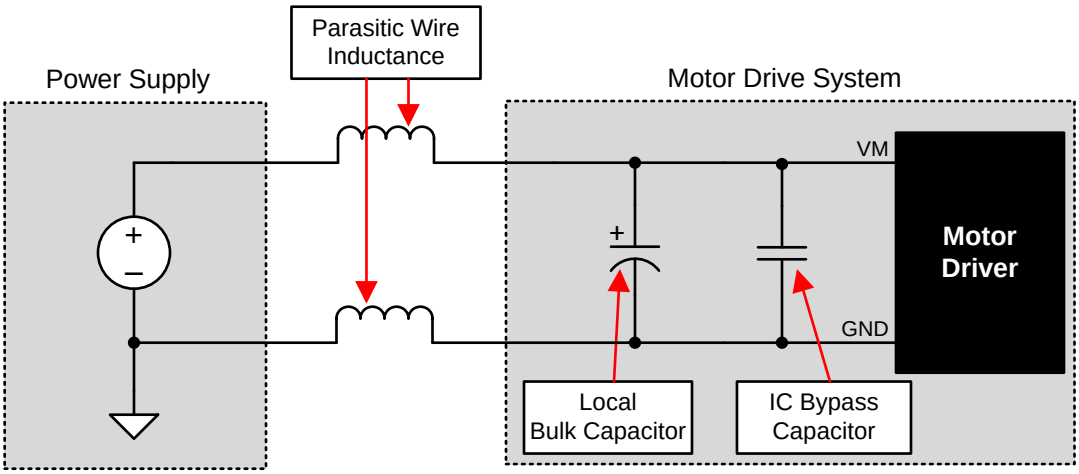

Copyright © 2016, Texas Instruments Incorporated

Figure 31. Example Setup of Motor Drive System With External Power Supply

Copyright © 2016–2018, Texas Instruments Incorporated

10 Layout

10.1 Layout Guidelines

The VM terminal should be bypassed to GND using a low-ESR ceramic bypass capacitor with a recommended value of 0.01 µF rated for VM. This capacitor should be placed as close to the VM pin as possible with a thick trace or ground plane connection to the device GND pin.

The VM pin must be bypassed to ground using a bulk capacitor rated for VM. This component may be an electrolytic.

A low-ESR ceramic capacitor must be placed in between the CPL and CPH pins. TI recommends a value of 0.022 µF rated for VM. Place this component as close as possible to the pins.

A low-ESR ceramic capacitor must be placed in between the VM and VCP pins. TI recommends a value of 0.22 µF rated for 16 V. Place this component as close as possible to the pins.

Bypass AVDD and DVDD to ground with a ceramic capacitor rated 6.3 V. Place this bypassing capacitor as close as possible to the pin.

10.2 Layout Example

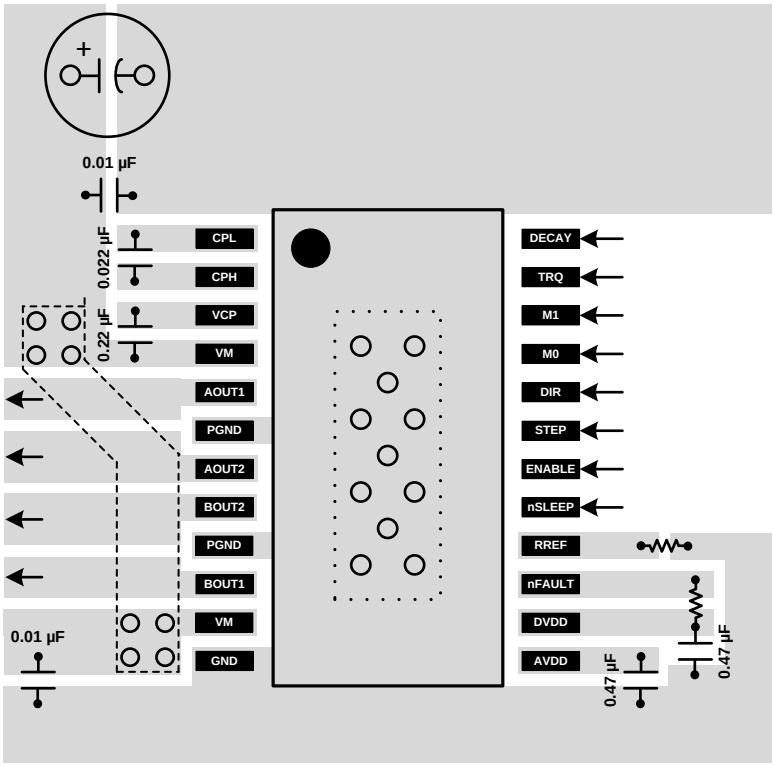

Figure 32. Layout Recommendation

11 器件和文档支持

11.1 文档支持

11.1.1 相关文档

- 德州仪器 (TI)，*《电流再循环和衰减模式》应用报告*
- 德州仪器 (TI)，*《计算电机驱动器的功耗》应用报告*
- 德州仪器 (TI)，*《使用数模转换器 (DAC) 调整满量程电流》应用报告*
- 德州仪器 (TI)，*《DRV8884 评估模块 (EVM) 用户指南》*
- 德州仪器 (TI)，*《PowerPAD™ 热增强型封装》应用报告*
- 德州仪器 (TI)，*《PowerPAD™ 速成》应用报告*
- 德州仪器 (TI)，*《了解电机驱动器电流额定值》应用报告*

11.2 接收文档更新通知

要接收文档更新通知，请导航至 TI.com.cn 上的器件产品文件夹。单击右上角的*通知我*进行注册，即可每周接收产品信息更改摘要。有关更改的详细信息，请查看任何已修订文档中包含的修订历史记录。

11.3 社区资源

下列链接提供到 TI 社区资源的连接。链接的内容由各个分销商"按照原样"提供。这些内容并不构成 TI 技术规范，并且不一定反映 TI 的观点；请参阅 TI 的 《使用条款》。

TI E2E™ 在线社区 ***TI 的工程师对工程师 (E2E) 社区。***此社区的创建目的在于促进工程师之间的协作。在 e2e.ti.com 中，您可以咨询问题、分享知识、拓展思路并与同行工程师一道帮助解决问题。

设计支持 ***TI 参考设计支持*** 可帮助您快速查找有帮助的 E2E 论坛、设计支持工具以及技术支持的联系信息。

11.4 商标

PowerPAD, E2E are trademarks of Texas Instruments.
All other trademarks are the property of their respective owners.

11.5 静电放电警告

这些装置包含有限的内置 ESD 保护。 存储或装卸时，应将导线一起截短或将装置放置于导电泡棉中，以防止 MOS 门极遭受静电损伤。

11.6 术语表

SLYZ022 — *TI 术语表*。

这份术语表列出并解释术语、缩写和定义。

12 机械、封装和可订购信息

以下页面包含机械、封装和可订购信息。这些信息是指定器件的最新可用数据。数据如有变更，恕不另行通知，且不会对此文档进行修订。如需获取此数据表的浏览器版本，请查阅左侧的导航栏。

版权 © 2016–2018, Texas Instruments Incorporated

PACKAGING INFORMATION

Orderable Device	Status (1)	Package Type	Package Drawing	Pins	Package Qty	Eco Plan (2)	Lead finish/ Ball material (6)	MSL Peak Temp (3)	Op Temp (°C)	Device Marking (4/5)	Samples
DRV8884PWP	ACTIVE	HTSSOP	PWP	24	60	RoHS & Green	NIPDAU	Level-3-260C-168 HR	-40 to 125	DRV8884	Samples
DRV8884PWPR	ACTIVE	HTSSOP	PWP	24	2000	RoHS & Green	NIPDAU	Level-3-260C-168 HR	-40 to 125	DRV8884	Samples
DRV8884RHRR	ACTIVE	WQFN	RHR	28	3000	RoHS & Green	NIPDAU	Level-1-260C-UNLIM	-40 to 125	DRV8884	Samples
DRV8884RHRT	ACTIVE	WQFN	RHR	28	250	RoHS & Green	NIPDAU	Level-1-260C-UNLIM	-40 to 125	DRV8884	Samples

(1) The marketing status values are defined as follows:
ACTIVE: Product device recommended for new designs.
LIFEBUY: TI has announced that the device will be discontinued, and a lifetime-buy period is in effect.
NRND: Not recommended for new designs. Device is in production to support existing customers, but TI does not recommend using this part in a new design.
PREVIEW: Device has been announced but is not in production. Samples may or may not be available.
OBSOLETE: TI has discontinued the production of the device.

(2) **RoHS:** TI defines "RoHS" to mean semiconductor products that are compliant with the current EU RoHS requirements for all 10 RoHS substances, including the requirement that RoHS substance do not exceed 0.1% by weight in homogeneous materials. Where designed to be soldered at high temperatures, "RoHS" products are suitable for use in specified lead-free processes. TI may reference these types of products as "Pb-Free".
RoHS Exempt: TI defines "RoHS Exempt" to mean products that contain lead but are compliant with EU RoHS pursuant to a specific EU RoHS exemption.
Green: TI defines "Green" to mean the content of Chlorine (Cl) and Bromine (Br) based flame retardants meet JS709B low halogen requirements of <=1000ppm threshold. Antimony trioxide based flame retardants must also meet the <=1000ppm threshold requirement.

(3) MSL, Peak Temp. - The Moisture Sensitivity Level rating according to the JEDEC industry standard classifications, and peak solder temperature.

(4) There may be additional marking, which relates to the logo, the lot trace code information, or the environmental category on the device.

(5) Multiple Device Markings will be inside parentheses. Only one Device Marking contained in parentheses and separated by a "~" will appear on a device. If a line is indented then it is a continuation of the previous line and the two combined represent the entire Device Marking for that device.

(6) Lead finish/Ball material - Orderable Devices may have multiple material finish options. Finish options are separated by a vertical ruled line. Lead finish/Ball material values may wrap to two lines if the finish value exceeds the maximum column width.

Important Information and Disclaimer: The information provided on this page represents TI's knowledge and belief as of the date that it is provided. TI bases its knowledge and belief on information provided by third parties, and makes no representation or warranty as to the accuracy of such information. Efforts are underway to better integrate information from third parties. TI has taken and

continues to take reasonable steps to provide representative and accurate information but may not have conducted destructive testing or chemical analysis on incoming materials and chemicals.
TI and TI suppliers consider certain information to be proprietary, and thus CAS numbers and other limited information may not be available for release.

In no event shall TI's liability arising out of such information exceed the total purchase price of the TI part(s) at issue in this document sold by TI to Customer on an annual basis.

TAPE AND REEL INFORMATION

REEL DIMENSIONS

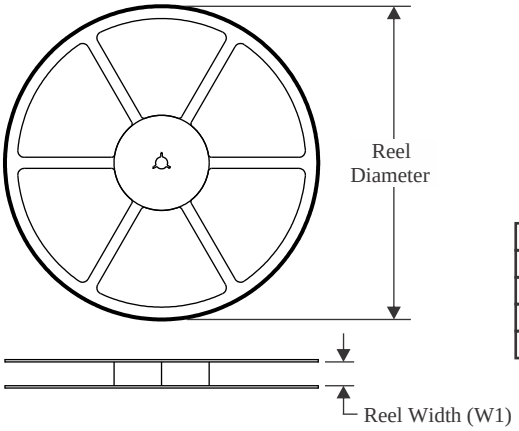

TAPE DIMENSIONS

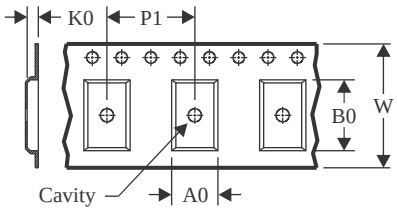

A0	Dimension designed to accommodate the component width
B0	Dimension designed to accommodate the component length
K0	Dimension designed to accommodate the component thickness
W	Overall width of the carrier tape
P1	Pitch between successive cavity centers

QUADRANT ASSIGNMENTS FOR PIN 1 ORIENTATION IN TAPE

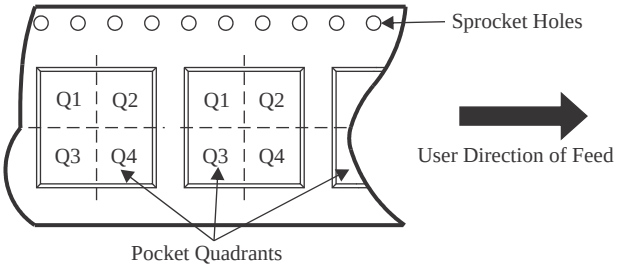

*All dimensions are nominal

Device	Package Type	Package Drawing	Pins	SPQ	Reel Diameter (mm)	Reel Width W1 (mm)	A0 (mm)	B0 (mm)	K0 (mm)	P1 (mm)	W (mm)	Pin1 Quadrant
DRV8884PWPR	HTSSOP	PWP	24	2000	330.0	16.4	6.95	8.3	1.6	8.0	16.0	Q1
DRV8884RHRR	WQFN	RHR	28	3000	330.0	12.4	3.8	5.8	1.2	8.0	12.0	Q1
DRV8884RHRT	WQFN	RHR	28	250	180.0	12.4	3.8	5.8	1.2	8.0	12.0	Q1

TAPE AND REEL BOX DIMENSIONS

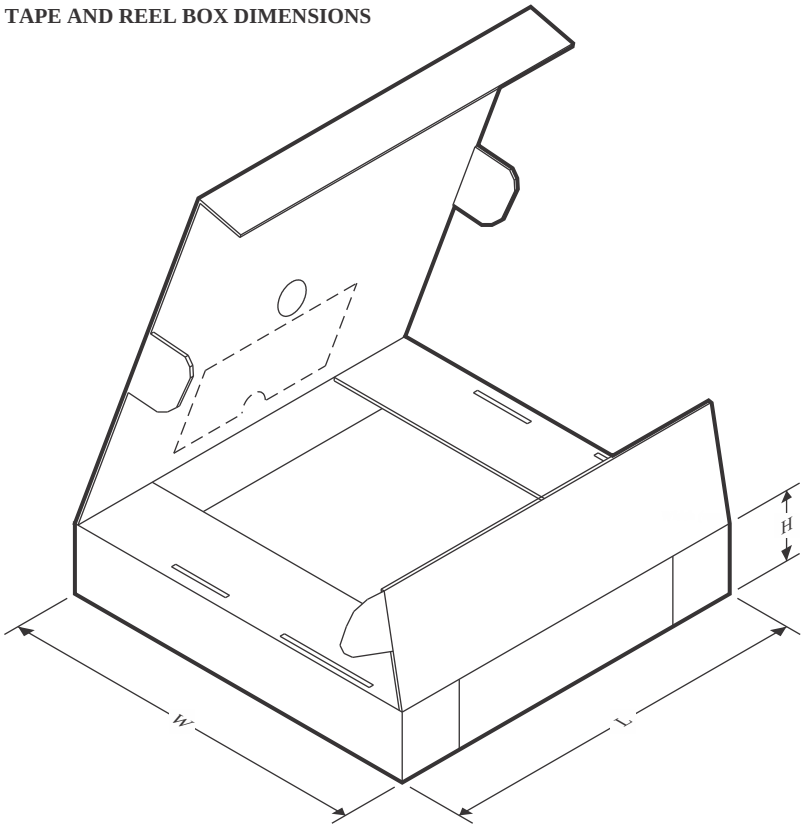

*All dimensions are nominal

Device	Package Type	Package Drawing	Pins	SPQ	Length (mm)	Width (mm)	Height (mm)
DRV8884PWPR	HTSSOP	PWP	24	2000	350.0	350.0	43.0
DRV8884RHRR	WQFN	RHR	28	3000	367.0	367.0	35.0
DRV8884RHRT	WQFN	RHR	28	250	210.0	185.0	35.0

TUBE

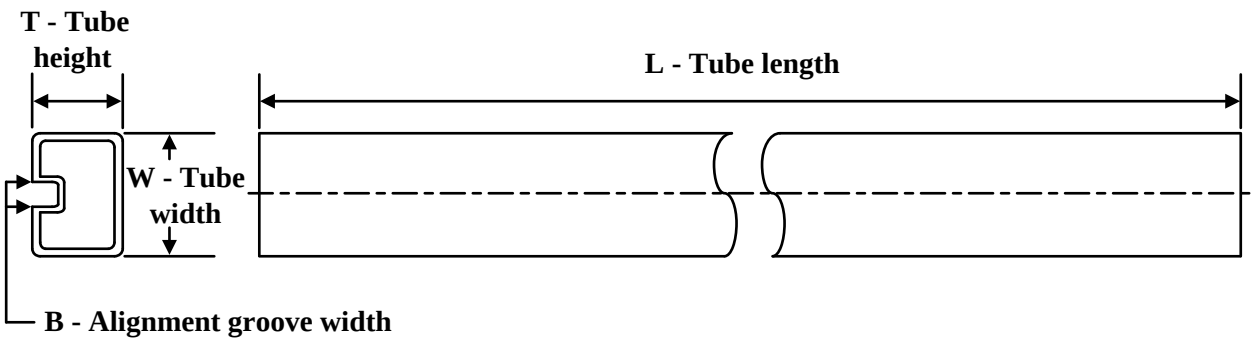

*All dimensions are nominal

Device	Package Name	Package Type	Pins	SPQ	L (mm)	W (mm)	T (µm)	B (mm)
DRV8884PWP	PWP	HTSSOP	24	60	530	10.2	3600	3.5

GENERIC PACKAGE VIEW

PWP 24

PowerPAD™ TSSOP - 1.2 mm max height

4.4 x 7.6, 0.65 mm pitch

PLASTIC SMALL OUTLINE

This image is a representation of the package family, actual package may vary.
Refer to the product data sheet for package details.

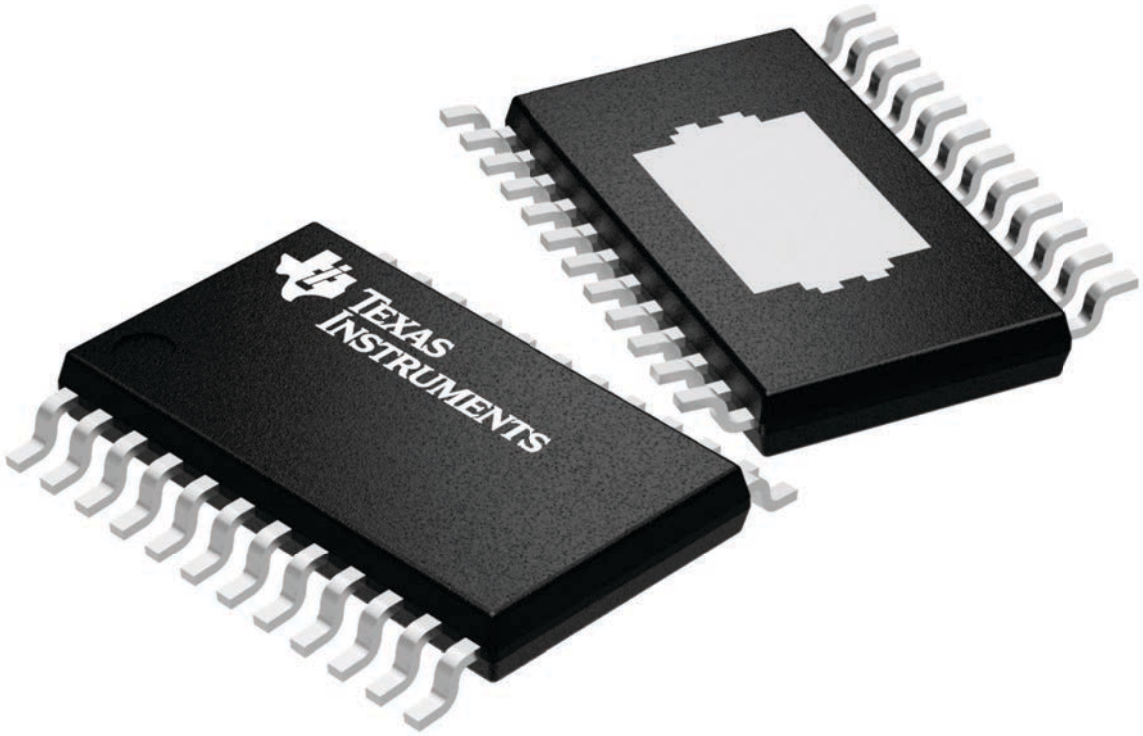

4224742/B

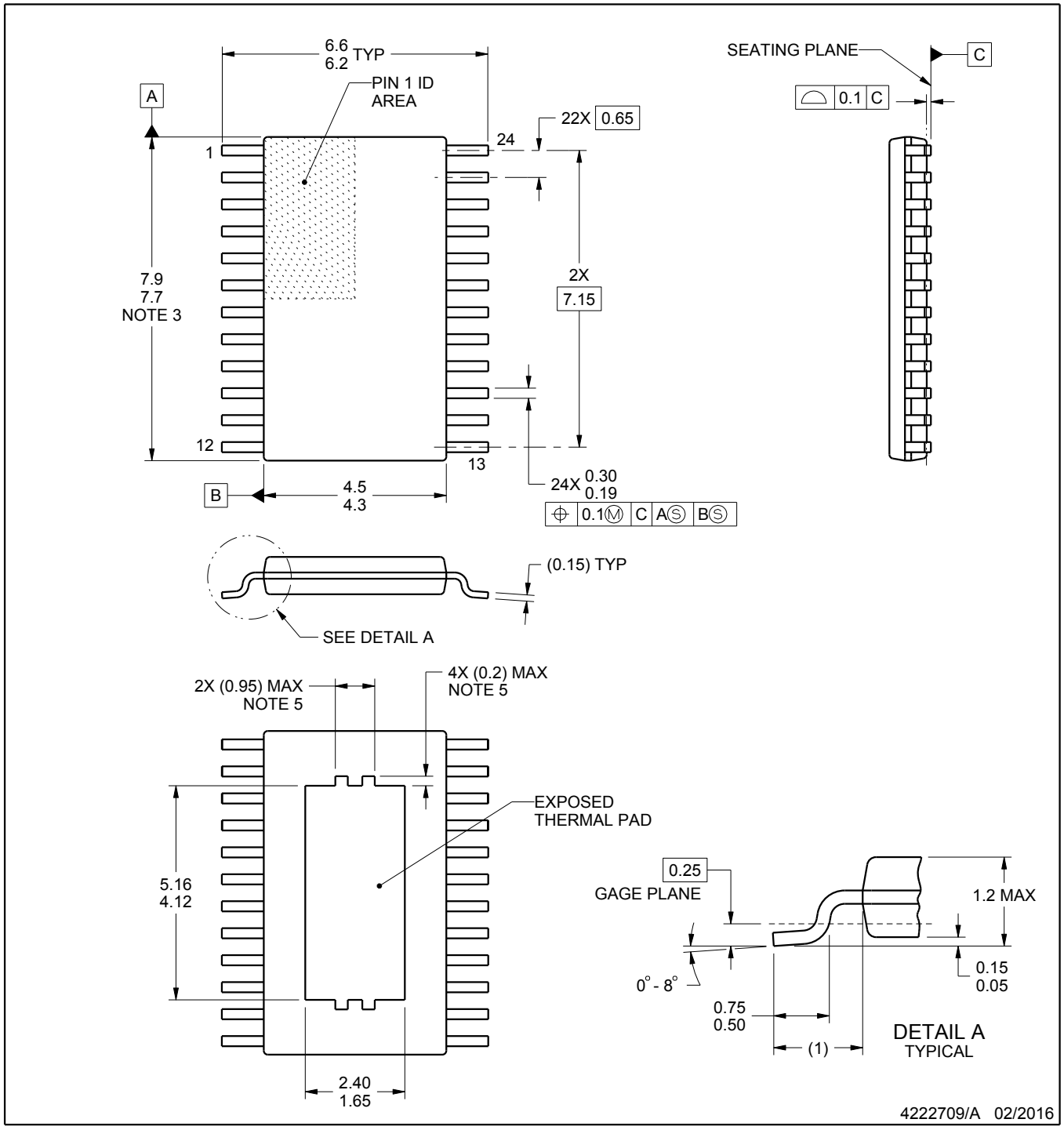

PowerPAD is a trademark of Texas Instruments.

NOTES:

1. All linear dimensions are in millimeters. Any dimensions in parenthesis are for reference only. Dimensioning and tolerancing per ASME Y14.5M.
2. This drawing is subject to change without notice.
3. This dimension does not include mold flash, protrusions, or gate burrs. Mold flash, protrusions, or gate burrs shall not exceed 0.15 mm per side.
4. Reference JEDEC registration MO-153.
5. Features may not be present and may vary.

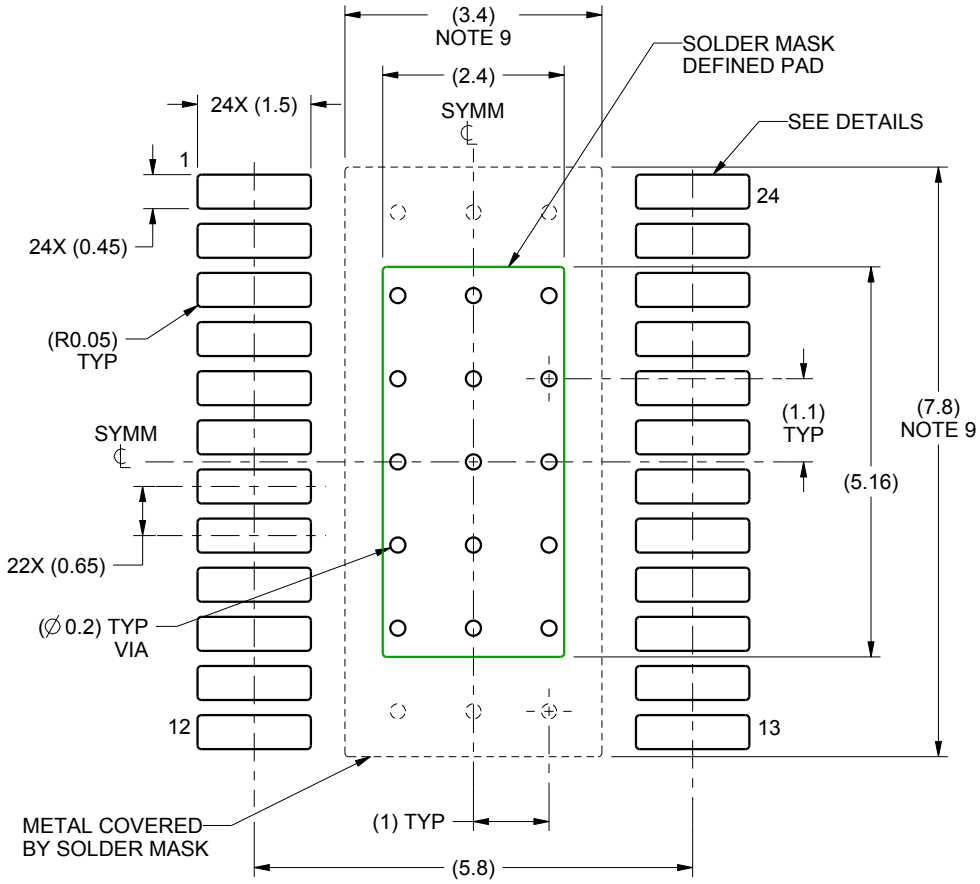

LAND PATTERN EXAMPLE
SCALE:10X

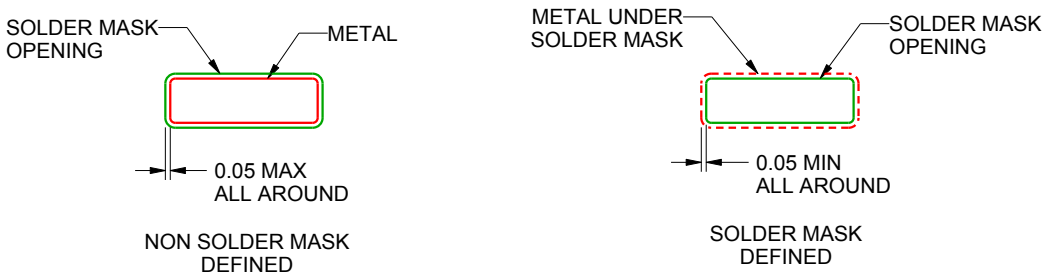

SOLDER MASK DETAILS
PADS 1-24

4222709/A 02/2016

NOTES: (continued)

6. Publication IPC-7351 may have alternate designs.
7. Solder mask tolerances between and around signal pads can vary based on board fabrication site.
8. This package is designed to be soldered to a thermal pad on the board. For more information, see Texas Instruments literature numbers SLMA002 (www.ti.com/lit/slma002) and SLMA004 (www.ti.com/lit/slma004).
9. Size of metal pad may vary due to creepage requirement.

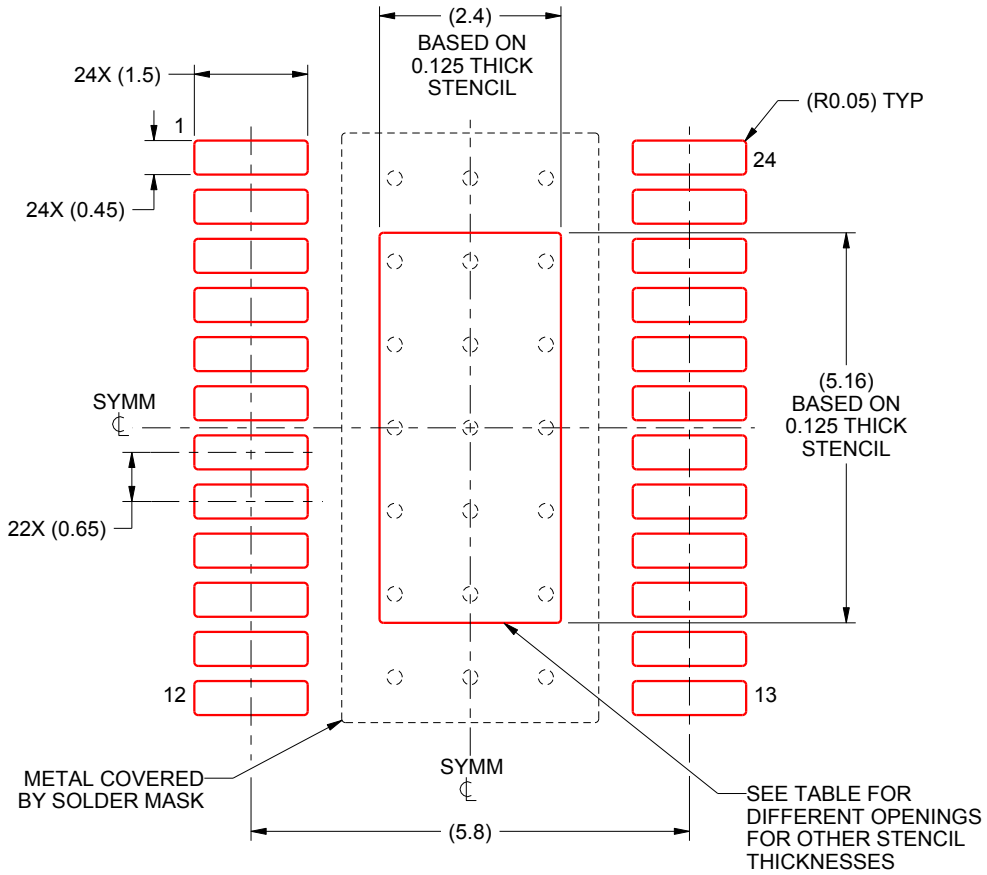

SOLDER PASTE EXAMPLE
EXPOSED PAD
100% PRINTED SOLDER COVERAGE BY AREA
SCALE:10X

STENCIL THICKNESS	SOLDER STENCIL OPENING
0.1	2.68 X 5.77
0.125	2.4 X 5.16 (SHOWN)
0.15	2.19 X 4.71
0.175	2.03 X 4.36

4222709/A 02/2016

NOTES: (continued)

10. Laser cutting apertures with trapezoidal walls and rounded corners may offer better paste release. IPC-7525 may have alternate design recommendations.
11. Board assembly site may have different recommendations for stencil design.

GENERIC PACKAGE VIEW

RHR 28

WQFN - 0.8 mm max height

3.5 x 5.5, 0.5 mm pitch

PLASTIC QUAD FLATPACK - NO LEAD

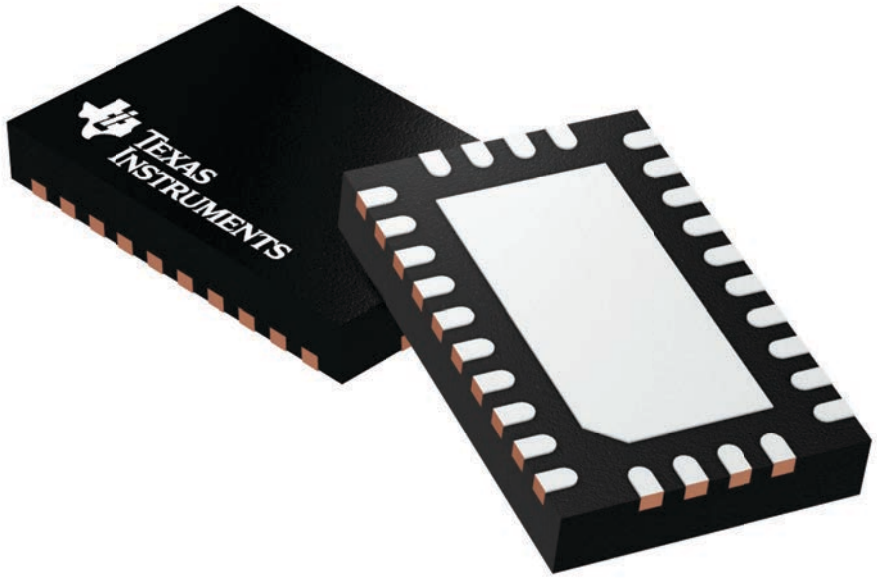

Images above are just a representation of the package family, actual package may vary.
Refer to the product data sheet for package details.

4210249/B

PACKAGE OUTLINE

RHR0028A

WQFN - 0.8 mm max height

PLASTIC QUAD FLATPACK - NO LEAD

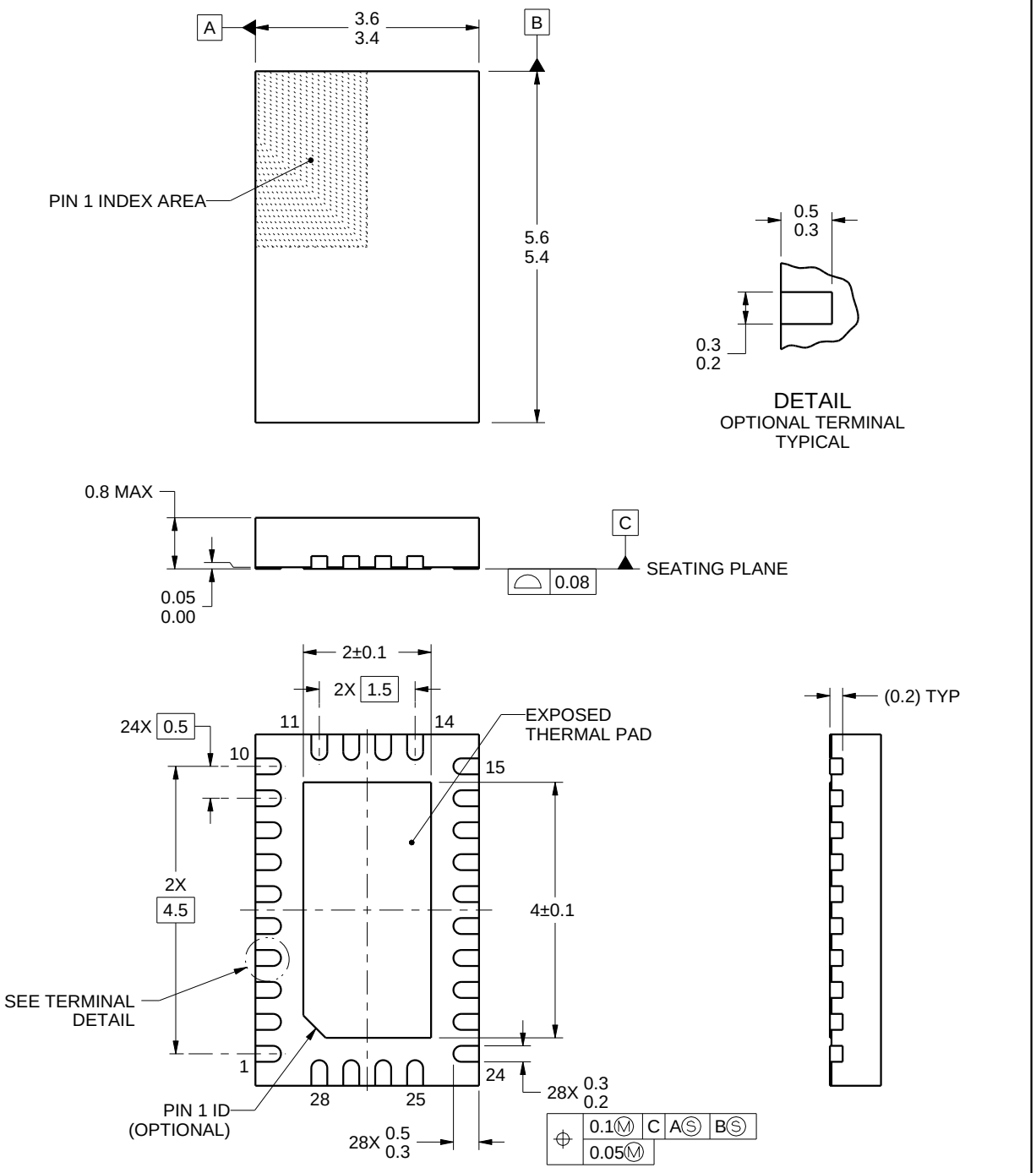

NOTES:

1. All linear dimensions are in millimeters. Any dimensions in parenthesis are for reference only. Dimensioning and tolerancing per ASME Y14.5M.
2. This drawing is subject to change without notice.
3. The package thermal pad must be soldered to the printed circuit board for thermal and mechanical performance.

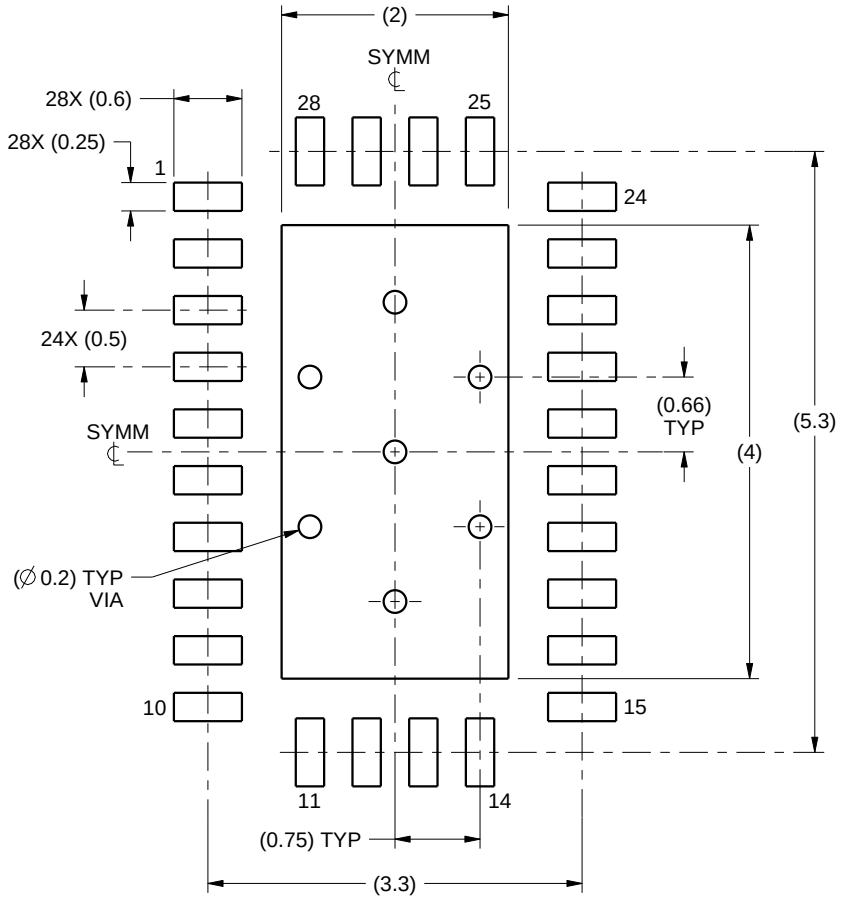

LAND PATTERN EXAMPLE
SCALE:15X

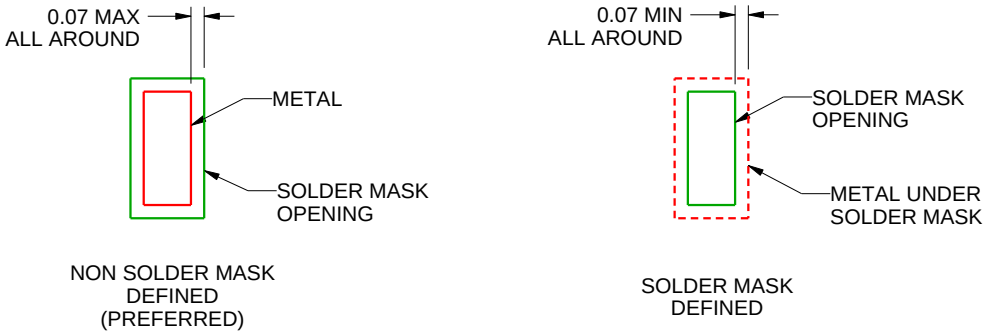

SOLDER MASK DETAILS

4219075/A 11/2014

NOTES: (continued)

4. This package is designed to be soldered to a thermal pad on the board. For more information, see Texas Instruments literature number SLUA271 (www.ti.com/lit/slua271).

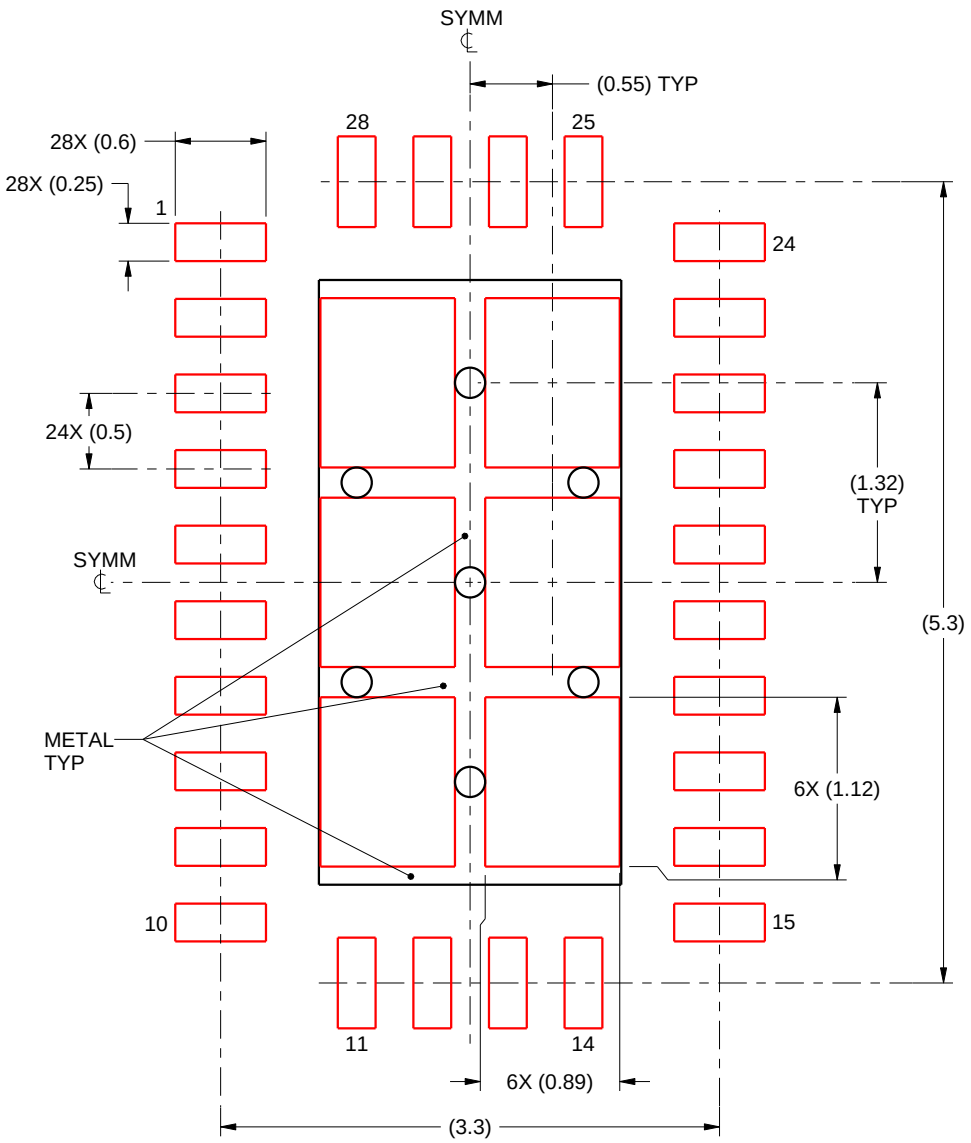

SOLDER PASTE EXAMPLE
BASED ON 0.125 mm THICK STENCIL

EXPOSED PAD
75% PRINTED SOLDER COVERAGE BY AREA
SCALE:20X

4219075/A 11/2014

NOTES: (continued)

5. Laser cutting apertures with trapezoidal walls and rounded corners may offer better paste release. IPC-7525 may have alternate design recommendations.

重要声明和免责声明

TI“按原样”提供技术和可靠性数据（包括数据表）、设计资源（包括参考设计）、应用或其他设计建议、网络工具、安全信息和其他资源，不保证没有瑕疵且不做出任何明示或暗示的担保，包括但不限于对适销性、某特定用途方面的适用性或不侵犯任何第三方知识产权的暗示担保。

这些资源可供使用 TI 产品进行设计的熟练开发人员使用。您将自行承担以下全部责任：(1) 针对您的应用选择合适的 TI 产品，(2) 设计、验证并测试您的应用，(3) 确保您的应用满足相应标准以及任何其他功能安全、信息安全、监管或其他要求。

这些资源如有变更，恕不另行通知。TI 授权您仅可将这些资源用于研发本资源所述的 TI 产品的应用。严禁对这些资源进行其他复制或展示。您无权使用任何其他 TI 知识产权或任何第三方知识产权。您应全额赔偿因在这些资源的使用中对 TI 及其代表造成的任何索赔、损害、成本、损失和债务，TI 对此概不负责。

TI 提供的产品受 TI 的销售条款或 ti.com 上其他适用条款/TI 产品随附的其他适用条款的约束。TI 提供这些资源并不会扩展或以其他方式更改 TI 针对 TI 产品发布的适用的担保或担保免责声明。

TI 反对并拒绝您可能提出的任何其他或不同的条款。

邮寄地址：Texas Instruments, Post Office Box 655303, Dallas, Texas 75265
Copyright © 2022，德州仪器 (TI) 公司