LMx37 3-Terminal Adjustable Regulators

1 Features

- Output Voltage Range Adjustable From –1.2 V to –37 V
- Output Current Capability of 1.5 A Max
- Input Regulation Typically 0.01% Per Input-Voltage Change
- Output Regulation Typically 0.3%
- Peak Output Current Constant Over Temperature Range of Regulator
- Ripple Rejection Typically 77 dB
- Direct Replacement for Industry-Standard LM237 and LM337

2 Applications

- Applications Requiring Negative Output Voltage or Precision Current Regulation
- Consumer Electronics
- End Equipment
- Portable Applications

3 Description

The LM237 and LM337 are adjustable 3-terminal negative-voltage regulators capable of supplying in excess of –1.5 A over an output voltage range of –1.2 V to –37 V. They require only two external resistors to set the output voltage and one output capacitor for frequency compensation.

Device Information(1)

PART NUMBER	PACKAGE	BODY SIZE (NOM)
LMx37	TO-220 (4)	10.16 mm x 8.82 mm
	TO-263 (4)	10.16 mm x 9.02 mm
	TO-252 (4)	6.6 mm x 6.10 mm

(1) For all available packages, see the orderable addendum at the end of the data sheet.

4 Simplified Schematic

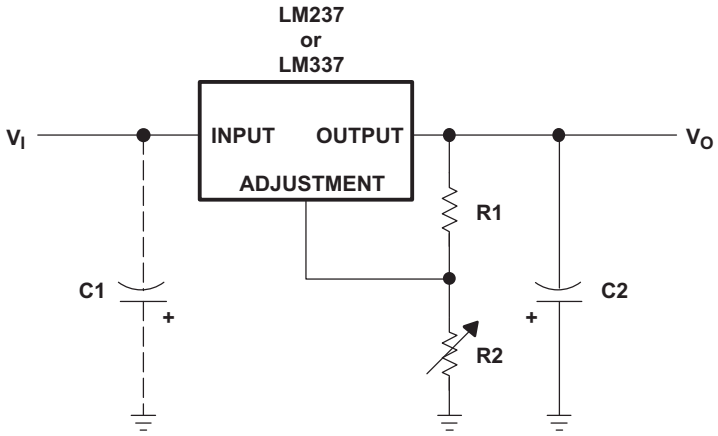

An IMPORTANT NOTICE at the end of this data sheet addresses availability, warranty, changes, use in safety-critical applications, intellectual property matters and other important disclaimers. PRODUCTION DATA.

Table of Contents

1 Features ... 1
2 Applications ... 1
3 Description ... 1
4 Simplified Schematic ... 1
5 Revision History ... 2
6 Pin Configuration and Functions ... 3
7 Specifications ... 4
7.1 Absolute Maximum Ratings ... 4
7.2 ESD Ratings ... 4
7.3 Recommended Operating Conditions ... 4
7.4 Thermal Information ... 4
7.5 Electrical Characteristics ... 5
7.6 Electrical Characteristics ... 5
7.7 Typical Characteristics ... 6
8 Detailed Description ... 7
8.1 Overview ... 7
8.2 Functional Block Diagram ... 7
8.3 Design Schematic ... 8
8.4 Feature Description ... 8
8.5 Device Functional Modes ... 8
9 Application and Implementation ... 9
9.1 Application Information ... 9
9.2 Typical Application ... 9
10 Power Supply Recommendations ... 10
11 Layout ... 11
11.1 Layout Guidelines ... 11
11.2 Layout Example ... 11
12 Device and Documentation Support ... 11
12.1 Related Links ... 11
12.2 Trademarks ... 11
12.3 Electrostatic Discharge Caution ... 11
12.4 Glossary ... 11
13 Mechanical, Packaging, and Orderable Information ... 11

5 Revision History

Changes from Revision K (November 2007) to Revision L	Page
• Added *Applications*, *Device Information* table, *Pin Functions* table, *ESD Ratings* table, *Thermal Information* table, *Typical Characteristics*, *Feature Description* section, *Device Functional Modes*, *Application and Implementation* section, *Power Supply Recommendations* section, *Layout* section, *Device and Documentation Support* section, and *Mechanical, Packaging, and Orderable Information* section.	1
• Deleted *Ordering Information* table.	1

Copyright © 1981–2015, Texas Instruments Incorporated

6 Pin Configuration and Functions

LM237, LM337...KC (TO-220) PACKAGE (TOP VIEW)

LM337...KCS (TO-220) PACKAGE (TOP VIEW)

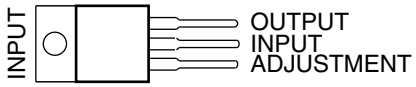

LM337...KTE, KTP, OR KVU PACKAGE (TOP VIEW)

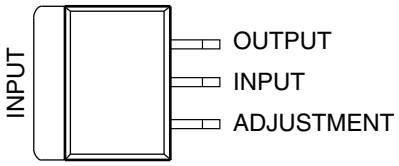

LM337...KTT (TO-263) PACKAGE (TOP VIEW)

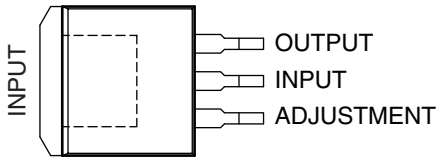

Pin Functions

PIN		TYPE	DESCRIPTION
NAME	NO.		
ADJUSTMENT	1	I	Adjustment pin for the output voltage. Connect two external resistors to adjust the output voltage.
INPUT	2	I	Input voltage. The input voltage and current will be designated V_I and I_I respectively.
OUTPUT	3	O	Output voltage. The output voltage and current will be designated V_O and I_O respectively.

7 Specifications

7.1 Absolute Maximum Ratings

over operating temperature ranges (unless otherwise noted)[1]

			MIN	MAX	UNIT
$V_I – V_O$	Input-to-output differential voltage			–40	V
T_J	Operating virtual junction temperature			150	°C
	Lead temperature	1.6 mm (1/16 in) from case for 10 s		260	°C
T_{stg}	Storage temperature range		–65	150	°C

(1) Stresses beyond those listed under *Absolute Maximum Ratings* may cause permanent damage to the device. These are stress ratings only, and functional operation of the device at these or any other conditions beyond those indicated under *Recommended Operating Conditions* is not implied. Exposure to absolute-maximum-rated conditions for extended periods may affect device reliability.

7.2 ESD Ratings

			VALUE	UNIT
$V_{(ESD)}$	Electrostatic discharge	Human body model (HBM), per ANSI/ESDA/JEDEC JS-001, all pins[1]	1500	V
		Charged device model (CDM), per JEDEC specification JESD22-C101, all pins[2]	1500	

(1) JEDEC document JEP155 states that 500-V HBM allows safe manufacturing with a standard ESD control process.
(2) JEDEC document JEP157 states that 250-V CDM allows safe manufacturing with a standard ESD control process.

7.3 Recommended Operating Conditions

			MIN	MAX	UNIT
V_I-V_O	Input-to-output differential voltage		-2.5	-37	
I_O	Output current	$\|V_I – V_O\| \le 40$ V, P ≤ 15 W	10	1500	mA
		$\|V_I – V_O\| \le 10$ V, P ≤ 15 W	6	1500	
T_J	Operating virtual junction temperature	LM237	–25	150	°C
		LM337	0	125	

7.4 Thermal Information

THERMAL METRIC[1]		LM237	LMx37		LM337			UNIT
		KC	KCS	KTE	KTP	KTT	KVU	
		4 PINS	4 PINS	4 PINS	4 PINS	4 PINS	4 PINS	
$R_{\theta JA}$	Junction-to-ambient thermal resistance	24.8	24.8	23	28	25.3	30.3	°C/W
$R_{\theta JC(top)}$	Junction-to-case (top) thermal resistance	3	3	3	19	30.3	N/A	

(1) For more information about traditional and new thermal metrics, see the *IC Package Thermal Metrics* application report (SPRA953).

Copyright © 1981–2015, Texas Instruments Incorporated

7.5 Electrical Characteristics

over recommended ranges of operating virtual junction temperature (unless otherwise noted)

PARAMETER	TEST CONDITIONS(1)		LM237			LM337			UNIT
			MIN	TYP	MAX	MIN	TYP	MAX	
Input regulation(2)	$V_I - V_O$ = –3 V to –40 V	T_J = 25°C		0.01	0.02		0.01	0.04	%/V
		T_J = MIN to MAX		0.02	0.05		0.02	0.07	
Ripple rejection	V_O = –10 V, f = 120 Hz			60			60		dB
	V_O = –10 V, f = 120 Hz, C_{ADJ} = 10 µF		66	77		66	77		
Output regulation	I_O = 10 mA to 1.5 A, T_J = 25°C	$\|V_O\| \le 5$ V			25			50	mV
		$\|V_O\| \ge 5$ V		0.3%	0.5%		0.3%	1%	—
	I_O = 10 mA to 1.5 A	$\|V_O\| \le 5$ V			50			70	mV
		$\|V_O\| \ge 5$ V			1%			1.5%	—
Output-voltage change with temperature	T_J = MIN to MAX			0.6%			0.6%		—
Output-voltage long-term drift	After 1000 h at T_J = MAX and $V_I - V_O$ = –40 V			0.3%	1%		0.3%	1%	—
Output noise voltage	f = 10 Hz to 10 kHz, T_J = 25°C			0.003%			0.003%		—
Minimum output current to maintain regulation	$\|V_I - V_O\| \le 40$ V			2.5	5		2.5	10	mA
	$\|V_I - V_O\| \le 10$ V			1.2	3		1.5	6	
Peak output current	$\|V_I - V_O\| \le 15$ V		1.5	2.2		1.5	2.2		A
	$\|V_I - V_O\| \le 40$ V, T_J = 25°C		0.24	0.4		0.15	0.4		
ADJUSTMENT current				65	100		65	100	µA
Change in ADJUSTMENT current	$V_I - V_O$ = –2.5 V to –40 V, I_O = 10 mA to MAX, T_J = 25°C			2	5		2	5	µA
Reference voltage (OUTPUT to ADJUSTMENT)	$V_I - V_O$ = –3 V to –40 V, I_O = 10 mA to 1.5 A, P ≤ rated dissipation	T_J = 25°C	–1.225	–1.25	–1.275	–1.213	–1.25	–1.287	V
		T_J = MIN to MAX	–1.2	–1.25	–1.3	–1.2	–1.25	–1.3	
Thermal regulation	Initial T_J = 25°C, 10-ms pulse			0.002	0.02		0.003	0.04	%/W

(1) Unless otherwise noted, the following test conditions apply: $|V_I - V_O|$ = 5 V and I_O = 0.5 A. For conditions shown as MIN or MAX, use the appropriate value specified under recommended operating conditions. All characteristics are measured with a 0.1-µF capacitor across the input and a 1-µF capacitor across the output. Pulse-testing techniques are used to maintain the junction temperature as close to the ambient temperature as possible. Thermal effects must be taken into account separately.
(2) Input regulation is expressed here as the percentage change in output voltage per 1-V change at the input.

7.6 Electrical Characteristics

T_J = 25°C

PARAMETER	TEST CONDITIONS(1)		LM237, LM337			UNIT
			MIN	TYP	MAX	
Input regulation(2)	$V_I - V_O$ = –3 V to –40 V			0.01	0.04	%/V
Ripple rejection	V_O = –10 V, f = 120 Hz			60		dB
	V_O = –10 V, f = 120 Hz, C_{ADJ} = 10 µF		66	77		
Output regulation	I_O = 10 mA to 1.5 A	$\|V_O\| \le 5$ V			50	mV
		$\|V_O\| \ge 5$ V		0.3%	1%	—
Output noise voltage	f = 10 Hz to 10 kHz			0.003%		—
Minimum output current to maintain regulation	$\|V_I - V_O\| \le 40$ V			2.5	10	mA
	$\|V_I - V_O\| \le 10$ V			1.5	6	
Peak output current	$\|V_I - V_O\| \le 15$ V		1.5	2.2		A
	$\|V_I - V_O\| \le 40$ V		0.15	0.4		
ADJUSTMENT current				65	100	µA
Change in ADJUSTMENT current	$V_I - V_O$ = –2.5 V to –40 V, I_O = 10 mA to MAX			2	5	µA
Reference voltage (OUTPUT to ADJUSTMENT)	$V_I - V_O$ = –3 V to –40 V, I_O = 10 mA to 1.5 A, P ≤ rated dissipation		–1.213	–1.25	–1.287	V

(1) Unless otherwise noted, the following test conditions apply: $|V_I - V_O|$ = 5 V and I_O = 0.5 A. All characteristics are measured with a 0.1-µF capacitor across the input and a 1-µF capacitor across the output. Pulse-testing techniques are used to maintain the junction temperature as close to the ambient temperature as possible. Thermal effects must be taken into account separately.
(2) Input regulation is expressed here as the percentage change in output voltage per 1-V change at the input.

Copyright © 1981–2015, Texas Instruments Incorporated

7.7 Typical Characteristics

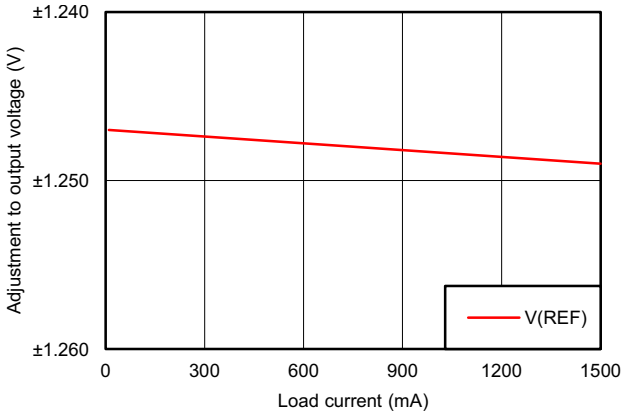

Figure 1. Adjustment Voltage vs Load current (V_{IN} = -4.3 V)

Copyright © 1981–2015, Texas Instruments Incorporated

8 Detailed Description

8.1 Overview

The LMx37 devices are adjustable 3-terminal negative-voltage regulators capable of supplying in excess of –1.5 A over an output voltage range of –1.2 V to –37 V. They are exceptionally easy to use, requiring only two external resistors to set the output voltage and one output capacitor for frequency compensation. The current design is optimized for excellent regulation and low thermal transients. In addition, LM237 and LM337 feature internal current limiting, thermal shutdown, and safe-area compensation, making them virtually immune to failure by overloads. The LMx37 devices serve a wide variety of applications, including local on-card regulation, programmable output-voltage regulation, and precision current regulation.

8.2 Functional Block Diagram

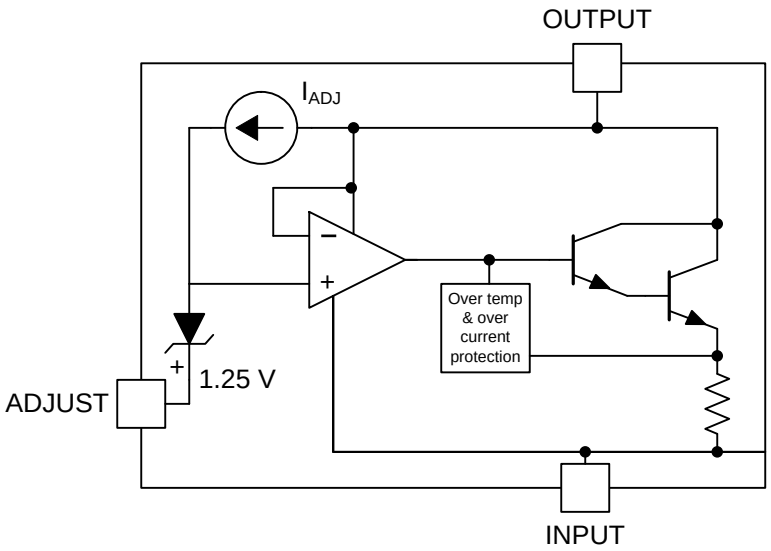

8.3 Design Schematic

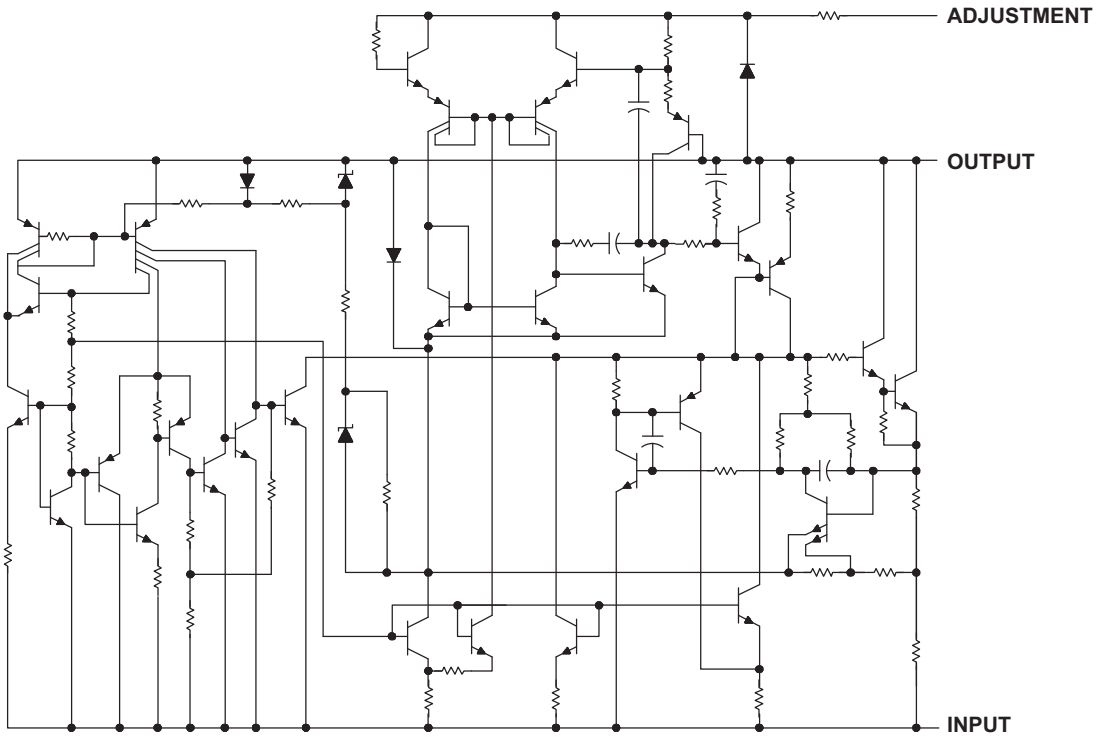

8.4 Feature Description

8.4.1 Output Voltage Adjustment

The ADJUSTMENT pin serves as a voltage adjustment reference for the output. The ADJUSTMENT pin can be attached to a resistor divider circuit to adjust its own voltage level. The reference voltage $V_{ADJUSTMENT}$ will typically be 1.25 V higher than V_O.

8.5 Device Functional Modes

8.5.1 Adjustable Output Mode

The device has a single functional mode: Adjustable output voltage mode. A resistor divider circuit on the ADJUSTMENT pin determines the output voltage.

Copyright © 1981–2015, Texas Instruments Incorporated

9 Application and Implementation

NOTE

Information in the following applications sections is not part of the TI component specification, and TI does not warrant its accuracy or completeness. TI's customers are responsible for determining suitability of components for their purposes. Customers should validate and test their design implementation to confirm system functionality.

9.1 Application Information

9.1.1 General Configurations

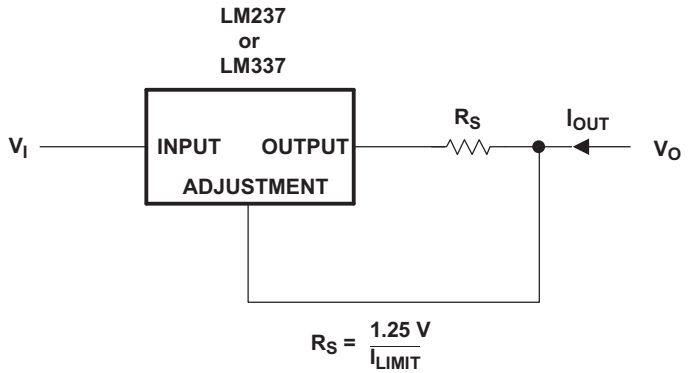

Figure 2. Current-Limiting Circuit

This application uses the LMx37 device's reference voltage, combined with the series resistor R_S, to limit the current to 1.25 V ÷ R_S

9.2 Typical Application

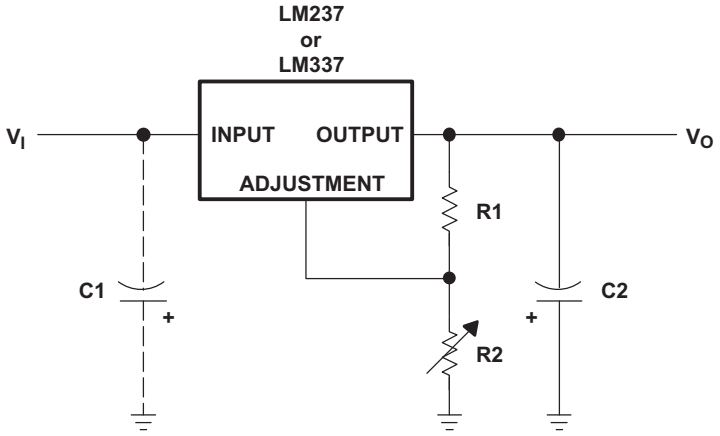

Figure 3. Adjustable Negative-Voltage Regulator

9.2.1 Design Requirements

- 1-µF solid tantalum on the input pin if the regulator is more than 10 cm from the power supply filter capacitor
- 1-µF solid tantalum or 10-µF aluminum electrolytic capacitor is required on the output pin for stability.
- R1, which is usually 120 Ω as part of the resistor divider.
- R2, which can be varied to change the value of V_O.

Typical Application (continued)

9.2.2 Detailed Design Procedure

V_O is determined by the values of R1 and R2. Choosing R1 = 120 Ω means that about 10.42 mA of current will flow through R1. The ~10 mA of current satisfies the minimum operating current and renders I_{REF} negligible. Since the current is coming from ground, the same amount of current will flow through R2. Therefore, the size of R2 will be the dominant factor in adjusting V_O. The relationship between R1, R2, and V_O is as follows:

$$R2 = R1\left(\frac{V_O}{-1.25} - 1\right)$$

where V_O is the output in volts. (1)

9.2.3 Application Curves

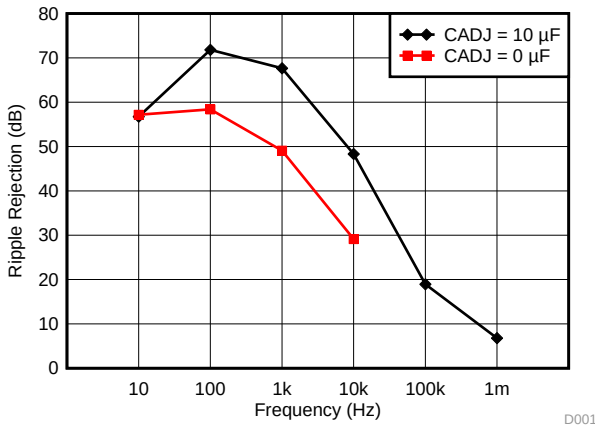

Figure 4. Ripple Rejection Over Frequency

10 Power Supply Recommendations

For best performance, the difference in voltage between the output and input must be between -2.5 V and -37 V. A 1-µF solid tantalum capacitor is required on the input pin if the regulator is more than 10 cm from the power supply filter capacitor. A 1-µF solid tantalum or 10-µF aluminum electrolytic capacitor is required on the output pin for stability.

Copyright © 1981–2015, Texas Instruments Incorporated

11 Layout

11.1 Layout Guidelines

Traces on the input and output pins should be thick enough to carry 1.5 A of current without violating thermal requirements of the device or the system. In addition, a 1-µF solid tantalum capacitor is required on the input pin if the regulator is more than 10 cm from the power supply filter capacitor. A 1-µF solid tantalum or 10-µF aluminum electrolytic capacitor is required on the output pin for stability.

11.2 Layout Example

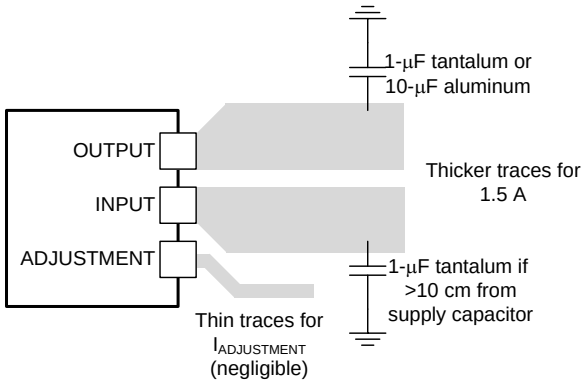

Figure 5. Layout Diagram

12 Device and Documentation Support

12.1 Related Links

The table below lists quick access links. Categories include technical documents, support and community resources, tools and software, and quick access to sample or buy.

Table 1. Related Links

PARTS	PRODUCT FOLDER	SAMPLE & BUY	TECHNICAL DOCUMENTS	TOOLS & SOFTWARE	SUPPORT & COMMUNITY
LM237	Click here	Click here	Click here	Click here	Click here
LM337	Click here	Click here	Click here	Click here	Click here

12.2 Trademarks

12.3 Electrostatic Discharge Caution

These devices have limited built-in ESD protection. The leads should be shorted together or the device placed in conductive foam during storage or handling to prevent electrostatic damage to the MOS gates.

12.4 Glossary

SLYZ022 — *TI Glossary*.

This glossary lists and explains terms, acronyms, and definitions.

13 Mechanical, Packaging, and Orderable Information

The following pages include mechanical, packaging, and orderable information. This information is the most current data available for the designated devices. This data is subject to change without notice and revision of this document. For browser-based versions of this data sheet, refer to the left-hand navigation.

PACKAGING INFORMATION

Orderable Device	Status (1)	Package Type	Package Drawing	Pins	Package Qty	Eco Plan (2)	Lead/Ball Finish (6)	MSL Peak Temp (3)	Op Temp (°C)	Device Marking (4/5)	Samples
LM237KC	OBSOLETE	TO-220	KC	3		TBD	Call TI	Call TI	-25 to 150	LM237	
LM237KCE3	OBSOLETE	TO-220	KC	3		TBD	Call TI	Call TI	-25 to 150	LM237	
LM237KCSE3	ACTIVE	TO-220	KCS	3	50	Pb-Free (RoHS)	CU SN	N / A for Pkg Type	-25 to 150	LM237	Samples
LM237KTER	OBSOLETE	PFM	KTE	3		TBD	Call TI	Call TI	-25 to 150		
LM337KC	OBSOLETE	TO-220	KC	3		TBD	Call TI	Call TI	0 to 125	LM337	
LM337KCE3	OBSOLETE	TO-220	KC	3		TBD	Call TI	Call TI	0 to 125	LM337	
LM337KCSE3	ACTIVE	TO-220	KCS	3	50	Pb-Free (RoHS)	CU SN	N / A for Pkg Type	0 to 125	LM337	Samples
LM337KTER	OBSOLETE	PFM	KTE	3		TBD	Call TI	Call TI	0 to 125	LM337	
LM337KTPR	OBSOLETE	PFM	KTP	2		TBD	Call TI	Call TI	0 to 125	L337	
LM337KTPRG3	OBSOLETE	PFM	KTP	2		TBD	Call TI	Call TI	0 to 125	L337	
LM337KTTR	ACTIVE	DDPAK/ TO-263	KTT	3	500	Green (RoHS & no Sb/Br)	CU SN	Level-3-245C-168 HR	0 to 125	LM337	Samples
LM337KTTRG3	ACTIVE	DDPAK/ TO-263	KTT	3	500	Green (RoHS & no Sb/Br)	CU SN	Level-3-245C-168 HR	0 to 125	LM337	Samples
LM337KVURG3	ACTIVE	TO-252	KVU	3	2500	Green (RoHS & no Sb/Br)	CU SN	Level-3-260C-168 HR	0 to 125	LM337	Samples
LM337Y	OBSOLETE	DIESALE	Y	0		TBD	Call TI	Call TI	0 to 125		

(1) The marketing status values are defined as follows:
ACTIVE: Product device recommended for new designs.
LIFEBUY: TI has announced that the device will be discontinued, and a lifetime-buy period is in effect.
NRND: Not recommended for new designs. Device is in production to support existing customers, but TI does not recommend using this part in a new design.
PREVIEW: Device has been announced but is not in production. Samples may or may not be available.
OBSOLETE: TI has discontinued the production of the device.

(2) Eco Plan - The planned eco-friendly classification: Pb-Free (RoHS), Pb-Free (RoHS Exempt), or Green (RoHS & no Sb/Br) - please check http://www.ti.com/productcontent for the latest availability information and additional product content details.
TBD: The Pb-Free/Green conversion plan has not been defined.
Pb-Free (RoHS): TI's terms "Lead-Free" or "Pb-Free" mean semiconductor products that are compatible with the current RoHS requirements for all 6 substances, including the requirement that lead not exceed 0.1% by weight in homogeneous materials. Where designed to be soldered at high temperatures, TI Pb-Free products are suitable for use in specified lead-free processes.
Pb-Free (RoHS Exempt): This component has a RoHS exemption for either 1) lead-based flip-chip solder bumps used between the die and package, or 2) lead-based die adhesive used between the die and leadframe. The component is otherwise considered Pb-Free (RoHS compatible) as defined above.

Green (RoHS & no Sb/Br): TI defines "Green" to mean Pb-Free (RoHS compatible), and free of Bromine (Br) and Antimony (Sb) based flame retardants (Br or Sb do not exceed 0.1% by weight in homogeneous material)

(3) MSL, Peak Temp. - The Moisture Sensitivity Level rating according to the JEDEC industry standard classifications, and peak solder temperature.

(4) There may be additional marking, which relates to the logo, the lot trace code information, or the environmental category on the device.

(5) Multiple Device Markings will be inside parentheses. Only one Device Marking contained in parentheses and separated by a "~" will appear on a device. If a line is indented then it is a continuation of the previous line and the two combined represent the entire Device Marking for that device.

(6) Lead/Ball Finish - Orderable Devices may have multiple material finish options. Finish options are separated by a vertical ruled line. Lead/Ball Finish values may wrap to two lines if the finish value exceeds the maximum column width.

Important Information and Disclaimer: The information provided on this page represents TI's knowledge and belief as of the date that it is provided. TI bases its knowledge and belief on information provided by third parties, and makes no representation or warranty as to the accuracy of such information. Efforts are underway to better integrate information from third parties. TI has taken and continues to take reasonable steps to provide representative and accurate information but may not have conducted destructive testing or chemical analysis on incoming materials and chemicals. TI and TI suppliers consider certain information to be proprietary, and thus CAS numbers and other limited information may not be available for release.

In no event shall TI's liability arising out of such information exceed the total purchase price of the TI part(s) at issue in this document sold by TI to Customer on an annual basis.

TAPE AND REEL INFORMATION

REEL DIMENSIONS

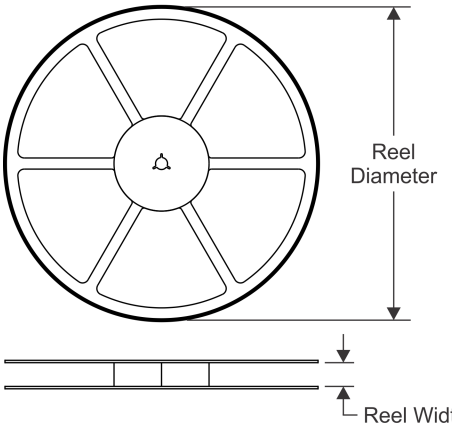

TAPE DIMENSIONS

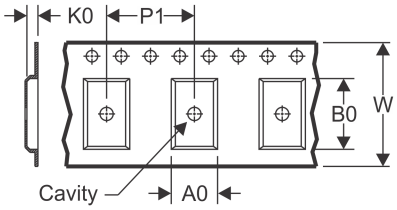

A0	Dimension designed to accommodate the component width
B0	Dimension designed to accommodate the component length
K0	Dimension designed to accommodate the component thickness
W	Overall width of the carrier tape
P1	Pitch between successive cavity centers

QUADRANT ASSIGNMENTS FOR PIN 1 ORIENTATION IN TAPE

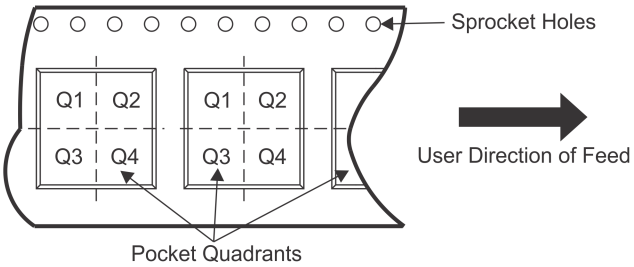

*All dimensions are nominal

Device	Package Type	Package Drawing	Pins	SPQ	Reel Diameter (mm)	Reel Width W1 (mm)	A0 (mm)	B0 (mm)	K0 (mm)	P1 (mm)	W (mm)	Pin1 Quadrant
LM337KTTR	DDPAK/ TO-263	KTT	3	500	330.0	24.4	10.8	16.3	5.11	16.0	24.0	Q2
LM337KVURG3	TO-252	KVU	3	2500	330.0	16.4	6.9	10.5	2.7	8.0	16.0	Q2

TAPE AND REEL BOX DIMENSIONS

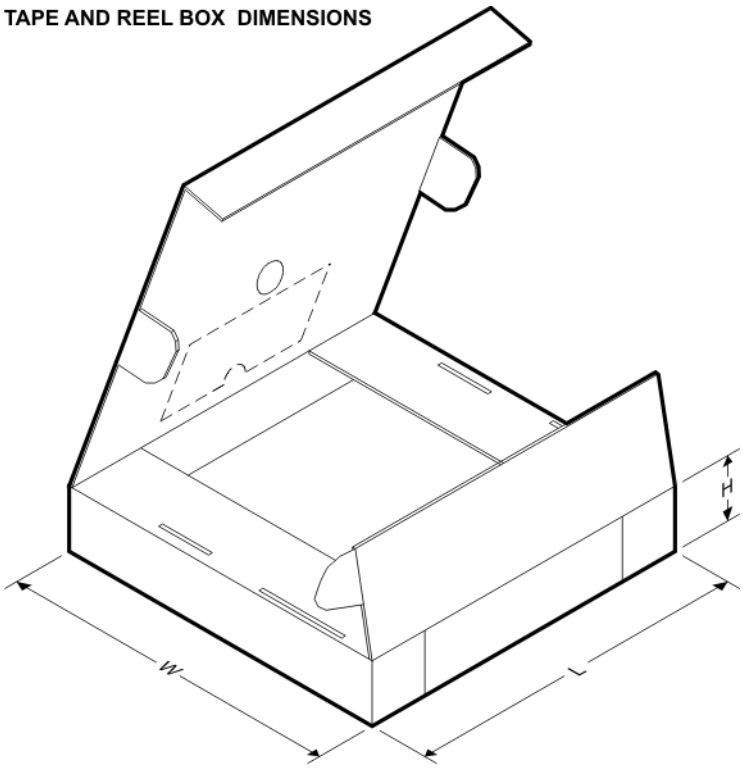

*All dimensions are nominal

Device	Package Type	Package Drawing	Pins	SPQ	Length (mm)	Width (mm)	Height (mm)
LM337KTTR	DDPAK/TO-263	KTT	3	500	340.0	340.0	38.0
LM337KVURG3	TO-252	KVU	3	2500	340.0	340.0	38.0

MPFM001E – OCTOBER 1994 – REVISED JANUARY 2001

KTE (R-PSFM-G3) **PowerFLEX™ PLASTIC FLANGE-MOUNT**

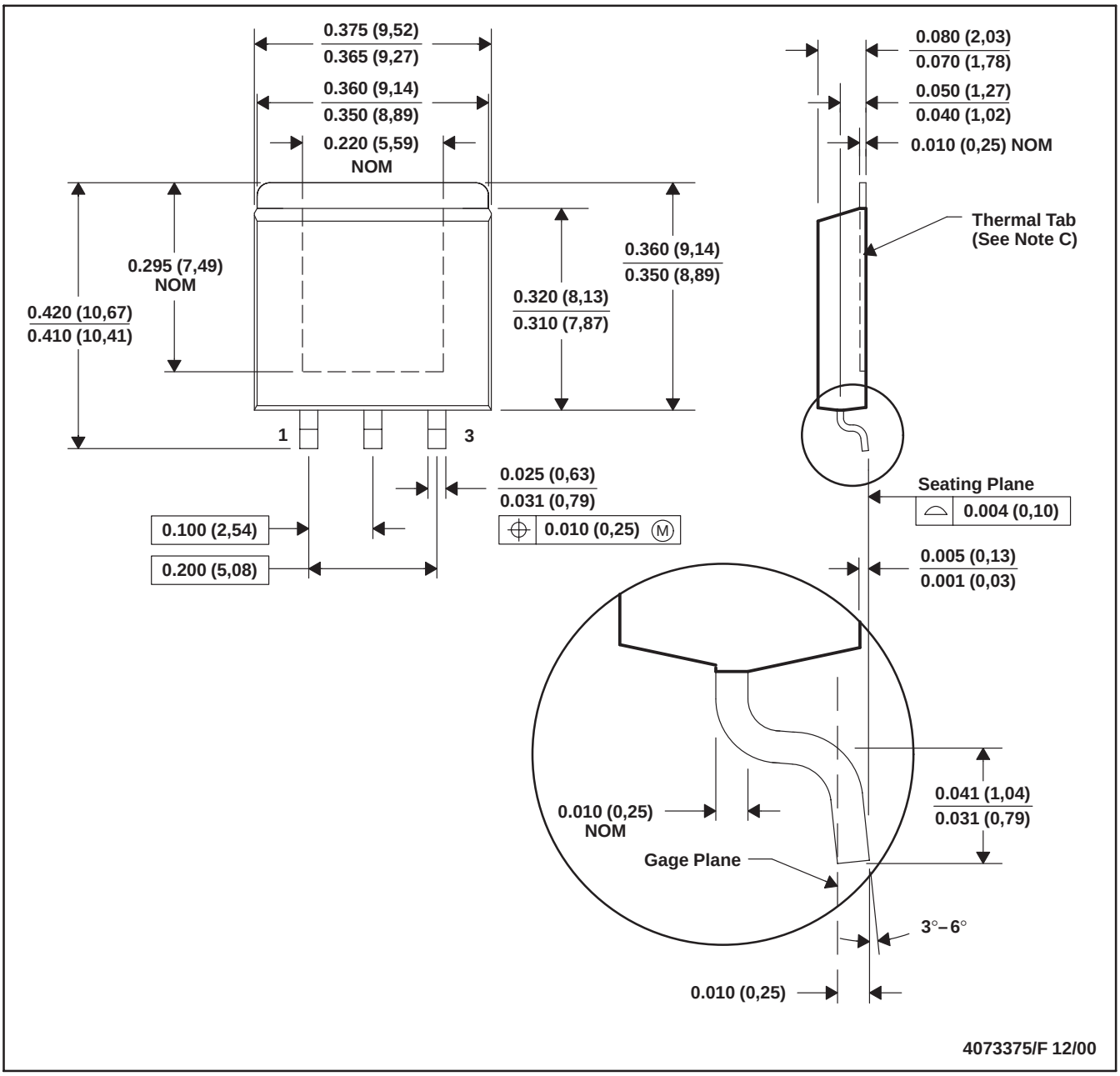

NOTES: A. All linear dimensions are in inches (millimeters).
B. This drawing is subject to change without notice.
C. The center lead is in electrical contact with the thermal tab.
D. Dimensions do not include mold protrusions, not to exceed 0.006 (0,15).
E. Falls within JEDEC MO-169

PowerFLEX is a trademark of Texas Instruments.

KTP (R-PSFM-G2) **PowerFLEX™ PLASTIC FLANGE-MOUNT PACKAGE**

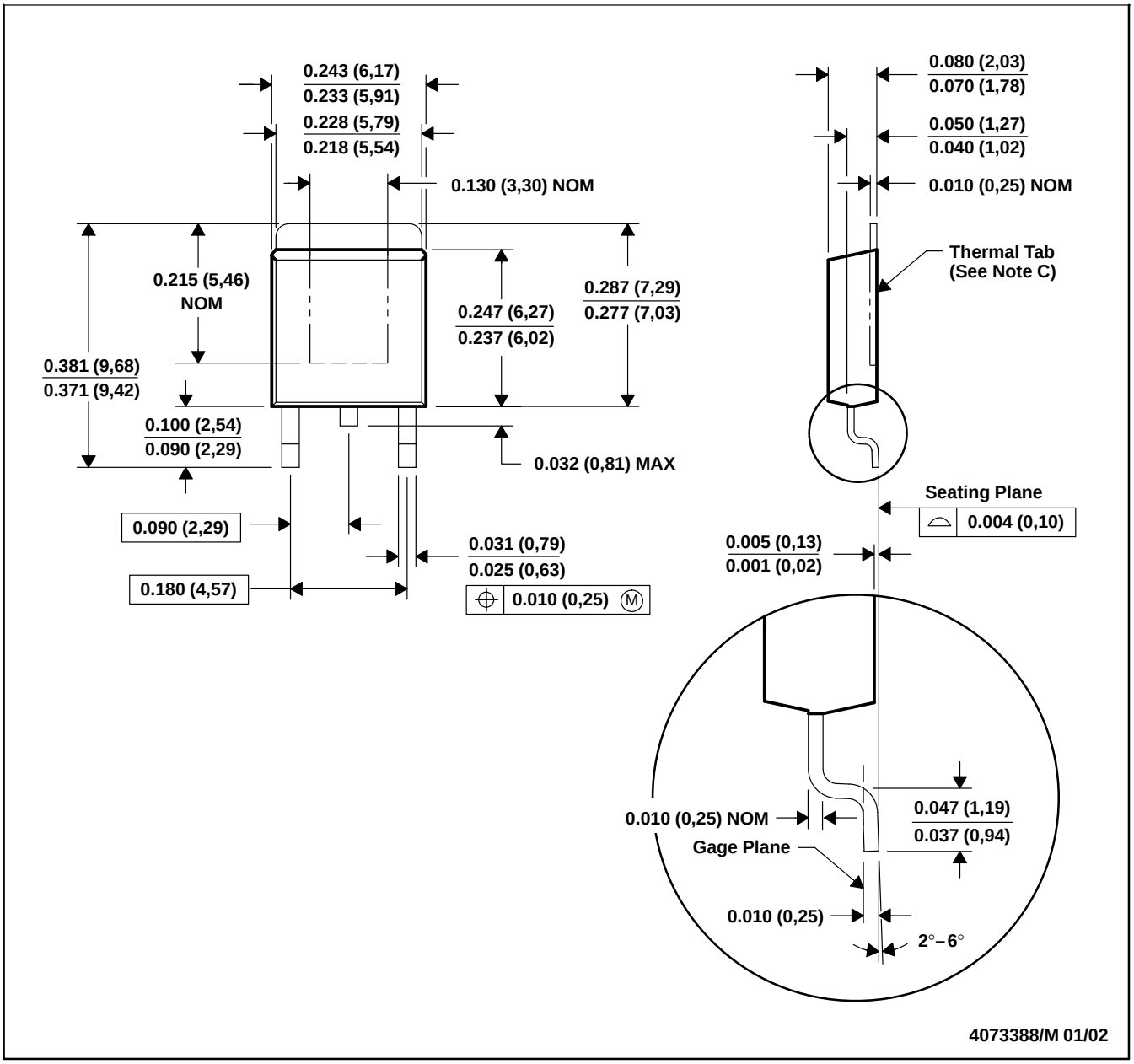

NOTES:
A. All linear dimensions are in inches (millimeters).
B. This drawing is subject to change without notice.
C. The center lead is in electrical contact with the thermal tab.
D. Dimensions do not include mold protrusions, not to exceed 0.006 (0,15).
E. Falls within JEDEC TO-252 variation AC.

PowerFLEX is a trademark of Texas Instruments.

KTT (R–PSFM–G3) PLASTIC FLANGE–MOUNT PACKAGE

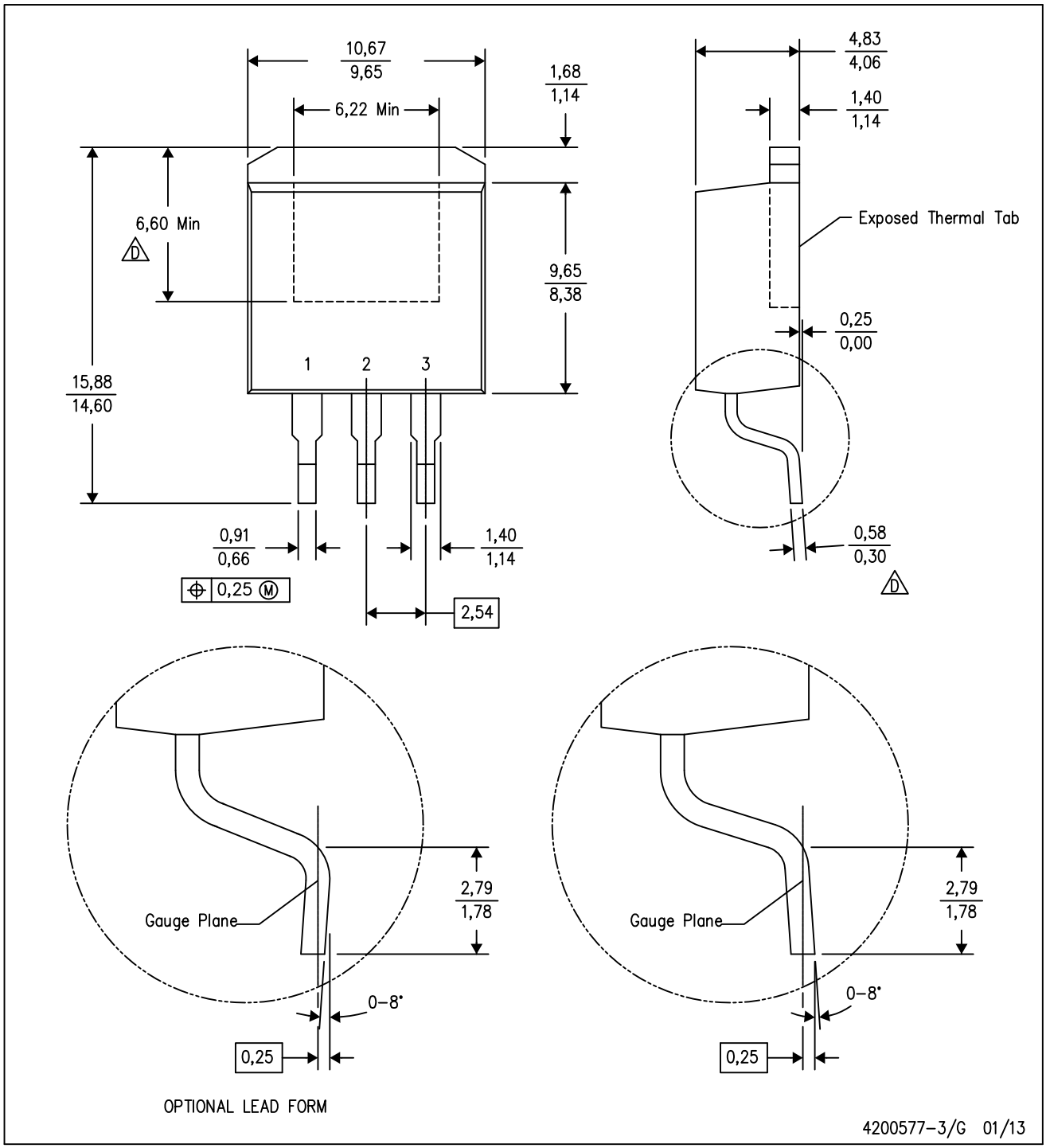

NOTES:
A. All linear dimensions are in millimeters.
B. This drawing is subject to change without notice.
C. Body dimensions do not include mold flash or protrusion. Mold flash or protrusion not to exceed 0.005 (0,13) per side.
D. Falls within JEDEC TO–263 variation AA, except minimum lead thickness and minimum exposed pad length.

KTT (R–PSFM–G3) PLASTIC FLANGE–MOUNT PACKAGE

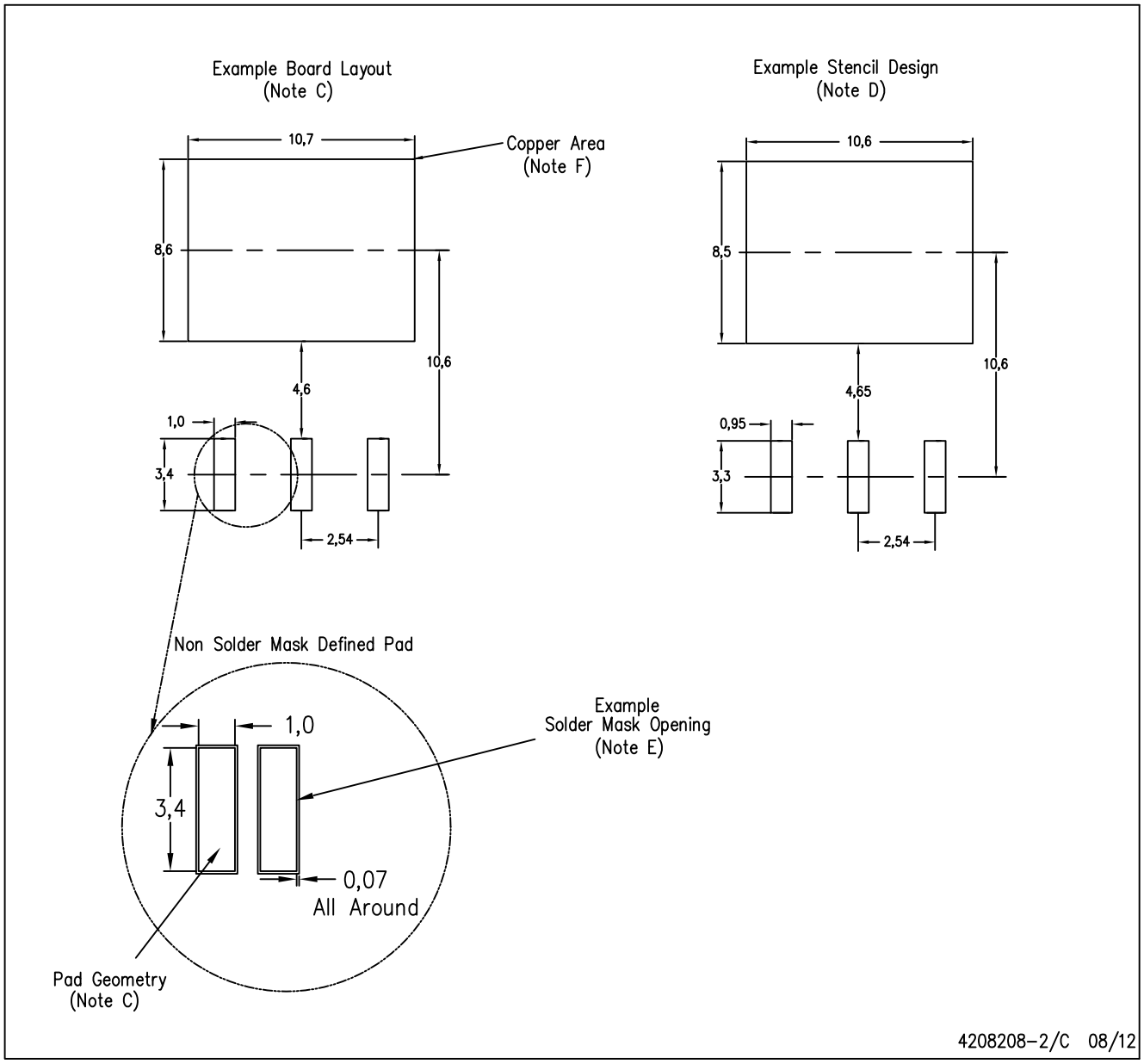

NOTES:
A. All linear dimensions are in millimeters.
B. This drawing is subject to change without notice.
C. Publication IPC–SM–782 is recommended for alternate designs.
D. Laser cutting apertures with trapezoidal walls and also rounding corners will offer better paste release. Customers should contact their board assembly site for stencil design recommendations. Refer to IPC–7525.
E. Customers should contact their board fabrication site for solder mask tolerances between and around signal pads.
F. This package is designed to be soldered to a thermal pad on the board. Refer to the Product Datasheet for specific thermal information, via requirements, and recommended thermal pad size. For thermal pad sizes larger than shown a solder mask defined pad is recommended in order to maintain the solderable pad geometry while increasing copper area.

KVU (R–PSFM–G3) PLASTIC FLANGE–MOUNT PACKAGE

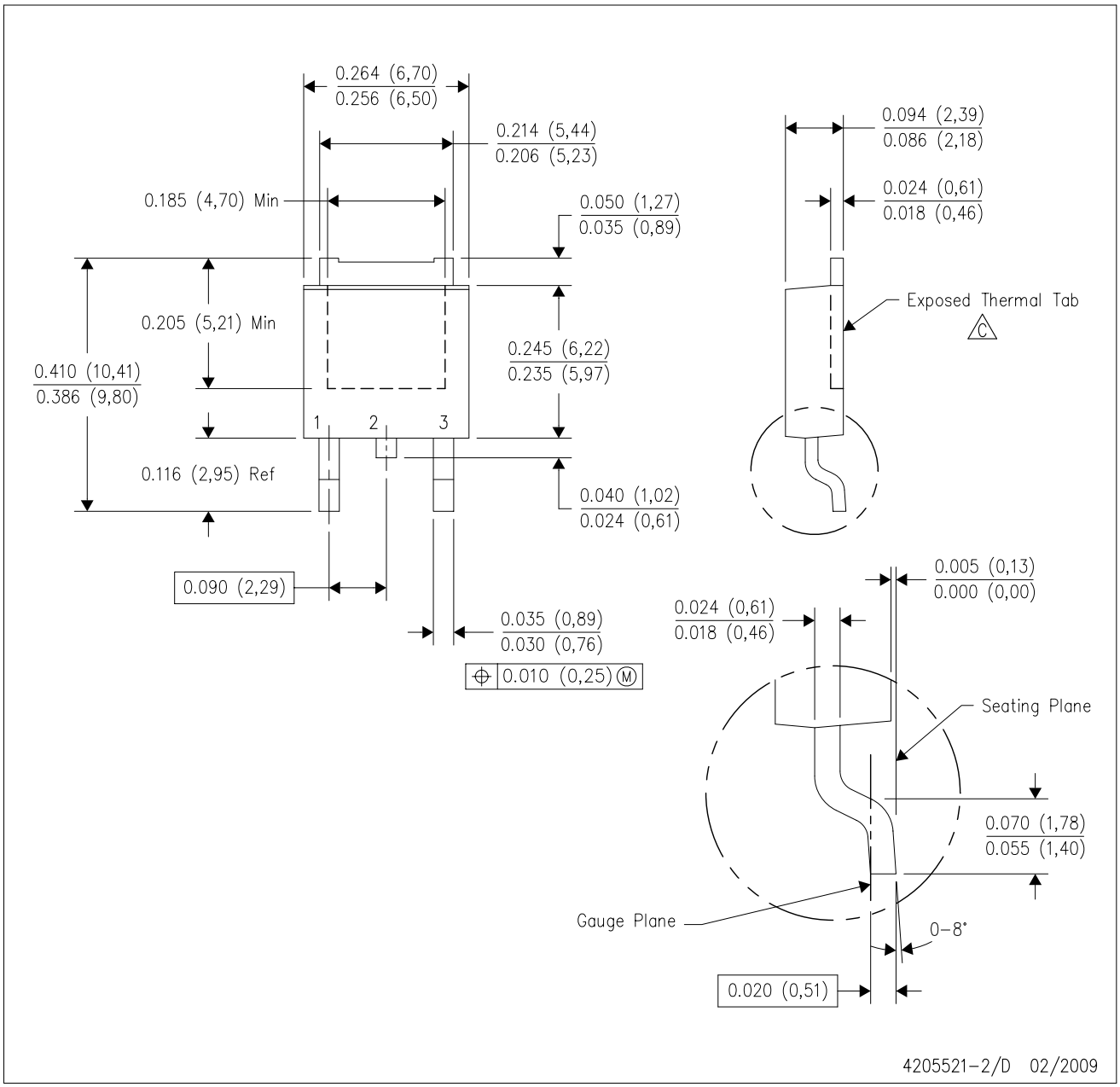

NOTES:
A. All linear dimensions are in inches (millimeters).
B. This drawing is subject to change without notice.
C. The center lead is in electrical contact with the exposed thermal tab.
D. Body Dimensions do not include mold flash or protrusions. Mold flash and protrusion shall not exceed 0.006 (0,15) per side.
E. Falls within JEDEC TO–252 variation AA.

KVU (R–PSFM–G3) PLASTIC FLANGE MOUNT PACKAGE

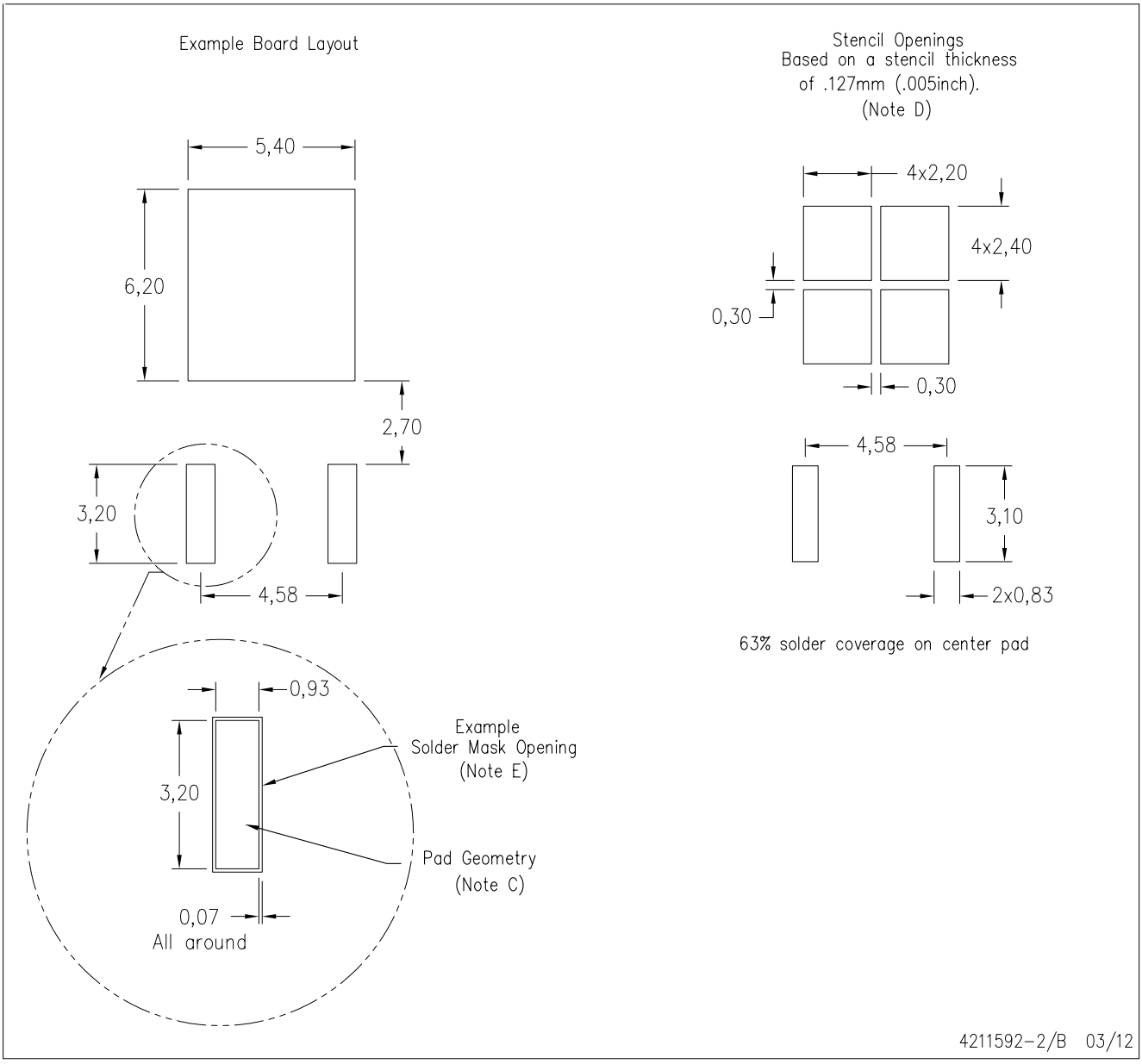

NOTES:
A. All linear dimensions are in millimeters.
B. This drawing is subject to change without notice.
C. Publication IPC–SM–782 is an alternate information source for PCB land pattern designs.
D. Laser cutting apertures with trapezoidal walls and also rounding corners will offer better paste release. Customers should contact their board assembly site for stencil design recommendations. Refer to IPC–7525 for other stencil recommendations.
E. Customers should contact their board fabrication site for recommended solder mask tolerances and via tenting recommendations for vias placed in thermal pad.

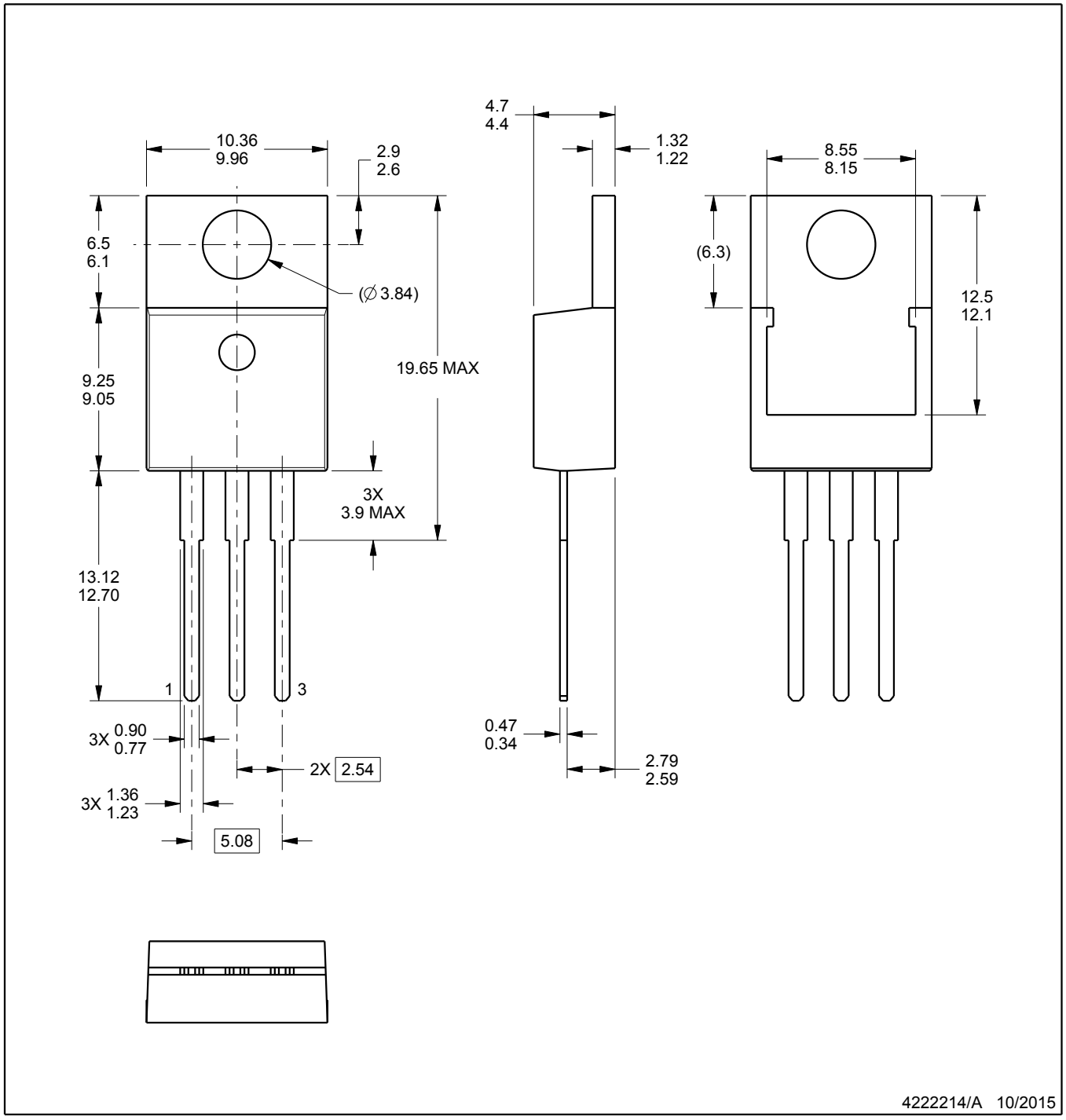

NOTES:

1. All controlling linear dimensions are in inches. Dimensions in brackets are in millimeters. Any dimension in brackets or parenthesis are for reference only. Dimensioning and tolerancing per ASME Y14.5M.
2. This drawing is subject to change without notice.
3. Reference JEDEC registration TO-220.

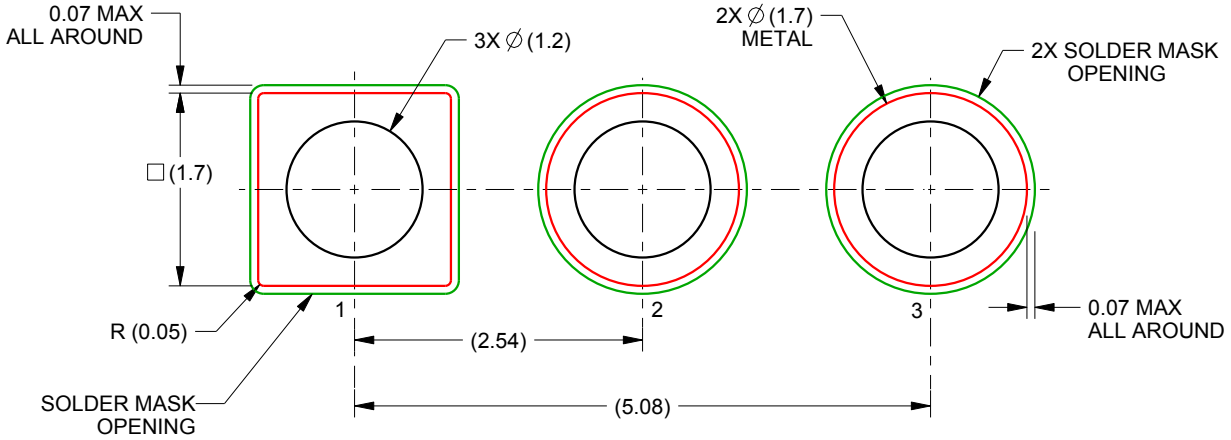

LAND PATTERN EXAMPLE
NON-SOLDER MASK DEFINED
SCALE:15X

4222214/A 10/2015

KC (R–PSFM–T3) PLASTIC FLANGE–MOUNT PACKAGE

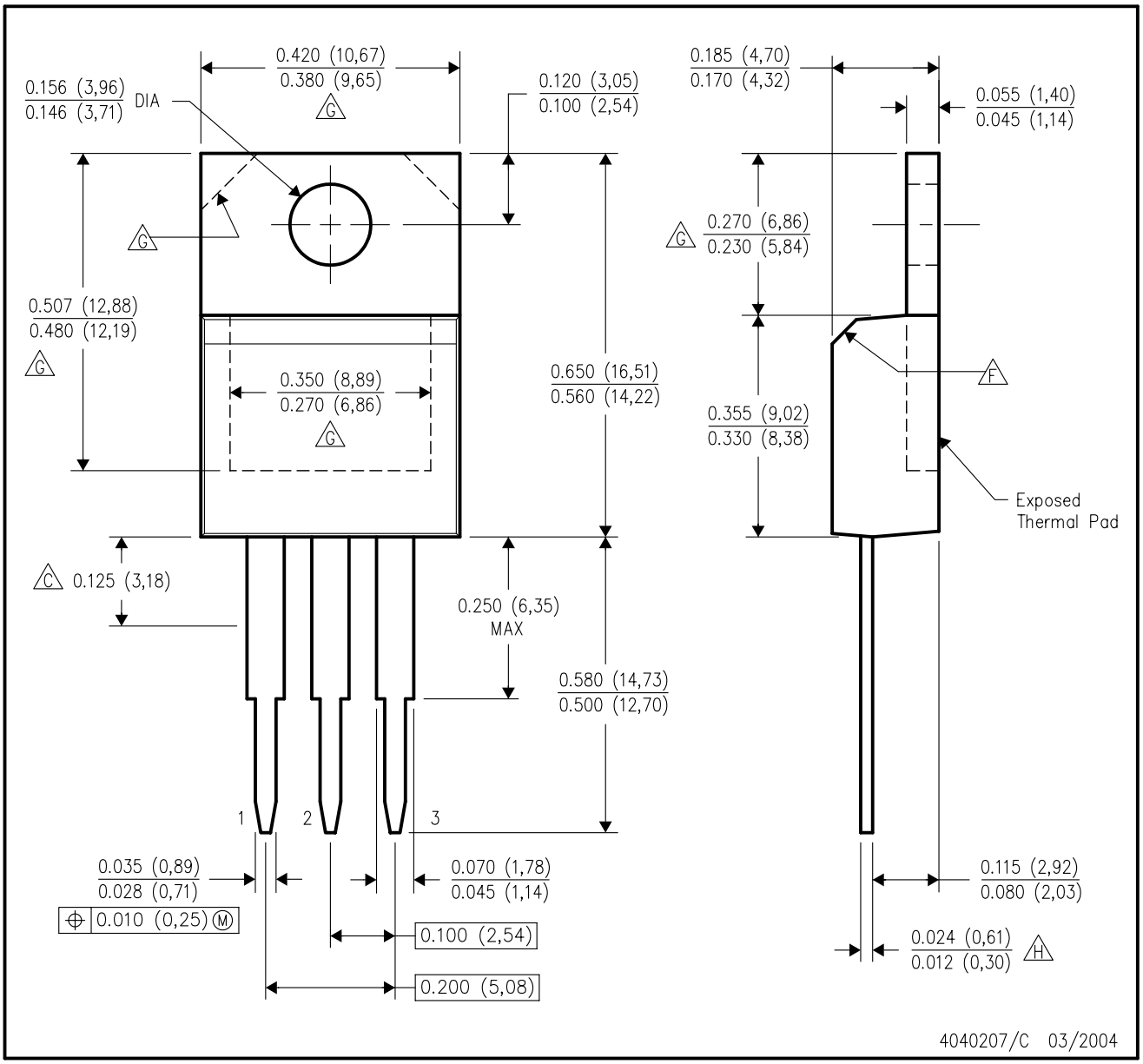

NOTES:
- A. All linear dimensions are in inches (millimeters).
- B. This drawing is subject to change without notice.
- C. Lead dimensions are not controlled within this area.
- D. All lead dimensions apply before solder dip.
- E. The center lead is in electrical contact with the mounting tab.
- F. The chamfer is optional.
- G. Thermal pad contour optional within these dimensions.
- H. Falls within JEDEC TO–220 variation AB, except minimum lead thickness.

IMPORTANT NOTICE

Texas Instruments Incorporated and its subsidiaries (TI) reserve the right to make corrections, enhancements, improvements and other changes to its semiconductor products and services per JESD46, latest issue, and to discontinue any product or service per JESD48, latest issue. Buyers should obtain the latest relevant information before placing orders and should verify that such information is current and complete. All semiconductor products (also referred to herein as “components”) are sold subject to TI’s terms and conditions of sale supplied at the time of order acknowledgment.

TI warrants performance of its components to the specifications applicable at the time of sale, in accordance with the warranty in TI’s terms and conditions of sale of semiconductor products. Testing and other quality control techniques are used to the extent TI deems necessary to support this warranty. Except where mandated by applicable law, testing of all parameters of each component is not necessarily performed.

TI assumes no liability for applications assistance or the design of Buyers’ products. Buyers are responsible for their products and applications using TI components. To minimize the risks associated with Buyers’ products and applications, Buyers should provide adequate design and operating safeguards.

TI does not warrant or represent that any license, either express or implied, is granted under any patent right, copyright, mask work right, or other intellectual property right relating to any combination, machine, or process in which TI components or services are used. Information published by TI regarding third-party products or services does not constitute a license to use such products or services or a warranty or endorsement thereof. Use of such information may require a license from a third party under the patents or other intellectual property of the third party, or a license from TI under the patents or other intellectual property of TI.

Reproduction of significant portions of TI information in TI data books or data sheets is permissible only if reproduction is without alteration and is accompanied by all associated warranties, conditions, limitations, and notices. TI is not responsible or liable for such altered documentation. Information of third parties may be subject to additional restrictions.

Resale of TI components or services with statements different from or beyond the parameters stated by TI for that component or service voids all express and any implied warranties for the associated TI component or service and is an unfair and deceptive business practice. TI is not responsible or liable for any such statements.

Buyer acknowledges and agrees that it is solely responsible for compliance with all legal, regulatory and safety-related requirements concerning its products, and any use of TI components in its applications, notwithstanding any applications-related information or support that may be provided by TI. Buyer represents and agrees that it has all the necessary expertise to create and implement safeguards which anticipate dangerous consequences of failures, monitor failures and their consequences, lessen the likelihood of failures that might cause harm and take appropriate remedial actions. Buyer will fully indemnify TI and its representatives against any damages arising out of the use of any TI components in safety-critical applications.

In some cases, TI components may be promoted specifically to facilitate safety-related applications. With such components, TI’s goal is to help enable customers to design and create their own end-product solutions that meet applicable functional safety standards and requirements. Nonetheless, such components are subject to these terms.

No TI components are authorized for use in FDA Class III (or similar life-critical medical equipment) unless authorized officers of the parties have executed a special agreement specifically governing such use.

Only those TI components which TI has specifically designated as military grade or “enhanced plastic” are designed and intended for use in military/aerospace applications or environments. Buyer acknowledges and agrees that any military or aerospace use of TI components which have ***not*** been so designated is solely at the Buyer's risk, and that Buyer is solely responsible for compliance with all legal and regulatory requirements in connection with such use.

TI has specifically designated certain components as meeting ISO/TS16949 requirements, mainly for automotive use. In any case of use of non-designated products, TI will not be responsible for any failure to meet ISO/TS16949.

Products		**Applications**	
Audio	www.ti.com/audio	Automotive and Transportation	www.ti.com/automotive
Amplifiers	amplifier.ti.com	Communications and Telecom	www.ti.com/communications
Data Converters	dataconverter.ti.com	Computers and Peripherals	www.ti.com/computers
DLP® Products	www.dlp.com	Consumer Electronics	www.ti.com/consumer-apps
DSP	dsp.ti.com	Energy and Lighting	www.ti.com/energy
Clocks and Timers	www.ti.com/clocks	Industrial	www.ti.com/industrial
Interface	interface.ti.com	Medical	www.ti.com/medical
Logic	logic.ti.com	Security	www.ti.com/security
Power Mgmt	power.ti.com	Space, Avionics and Defense	www.ti.com/space-avionics-defense
Microcontrollers	microcontroller.ti.com	Video and Imaging	www.ti.com/video
RFID	www.ti-rfid.com		
OMAP Applications Processors	www.ti.com/omap	**TI E2E Community**	e2e.ti.com
Wireless Connectivity	www.ti.com/wirelessconnectivity		

Mailing Address: Texas Instruments, Post Office Box 655303, Dallas, Texas 75265
Copyright © 2015, Texas Instruments Incorporated