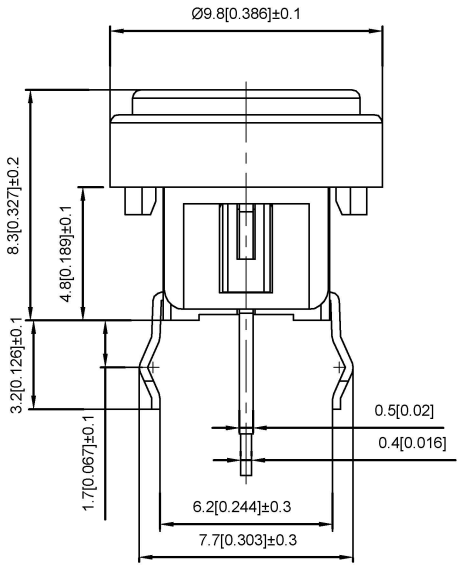

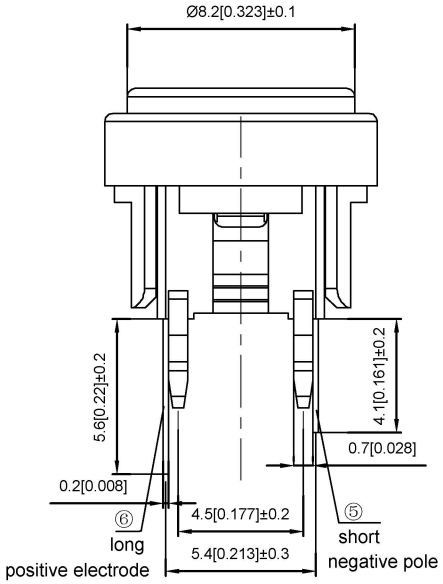

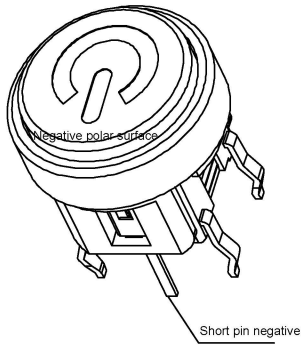

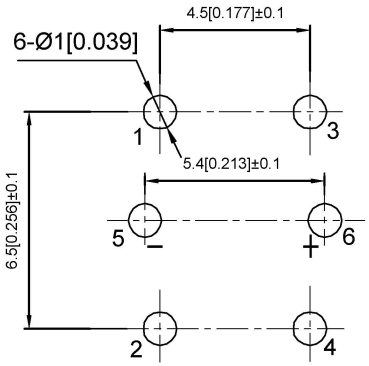

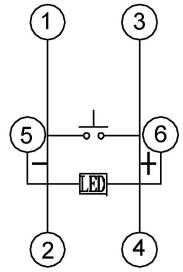

Led Color	Part No	VR	IF	Recommended Operating	IF	
					Nom	Max
White	TM-001-D1-01	DC5V	20mA	20mA	3.0V	3.6V
Red	TM-001-D1-02	DC5V	20mA	20mA	1.7V	2.4V
Blue	TM-001-D1-03	DC5V	20mA	20mA	3.0V	3.6V
Green	TM-001-D1-04	DC5V	20mA	20mA	1.9V	2.4V
Yellow	TM-001-D1-05	DC5V	20mA	20mA	1.9V	2.4V

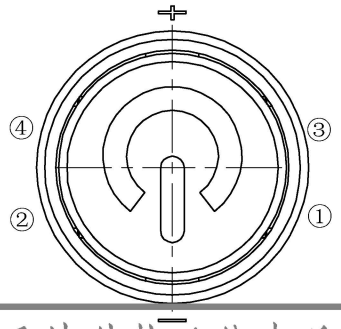

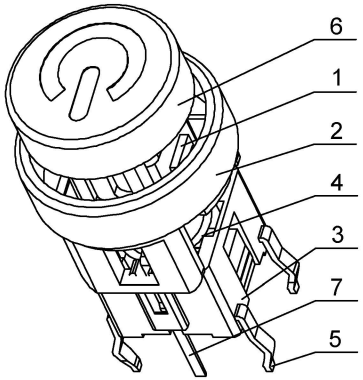

ITEM	PAPT NAMF	TER,NO	QTY	MATERIAL	FINISHING	REMARK
⑦	LED		1			
⑥	Hat		1	ABS		
⑤	Terminal	——	4	Brass（0.30t）	ag Plated	——
④	Contact	——	1	F.ag/SUS		——
③	Base	——	1	PA66		——
②	Cover	——	1	PA66		——
①	Keystake	——	1	PA66		——

广东星坤科技股份有限公司

生效		日期

MARK	DESCRIPTION	DATE	REVISED	APPROVED
ΔX				
ΔX				
ΔX				

REVISIONS

文件工程章

units:	mm
tolerance:	
X.X	±0.2mm
X.XX	±0.1mm
X.XXX	±0.05mm

UNSPECIFIED TOLERANCES

www.xk-dg.cn www.helloxkb.com www.helloxkb.cn

DSND		DATE		SCALE: N/A	MODEL TYPE: LED SWITCH
DWN		DATE		VIEW:	PART NO.:
CHKD		DATE		UNIT: mm/in	DWG NO.: TM-001-D1-X
APPD		DATE		SIZE: A4	

XKB INDUSTRIAL PRECISION CO.,LIMITED

WEIGHT	SHEET	REVISION
1.0g	1/1	A0