MSP430F5310, MSP430F530x Mixed-Signal Microcontrollers

1 Device Overview

1.1 Features

- Low supply-voltage range:
  3.6 V down to 1.8 V
- Ultra-low power consumption
  - Active mode (AM)
    All system clocks active
    - 195 µA/MHz (typical) at 8 MHz, 3 V, flash program execution
    - 115 µA/MHz (typical) at 8 MHz, 3 V, RAM program execution
  - Standby mode (LPM3)
    - Real-time clock (RTC) with crystal, watchdog, and supply supervisor operational, full RAM retention, fast wakeup:
      1.9 µA (typical) at 2.2 V,
      2.1 µA (typical) at 3 V
    - Low-power oscillator (VLO), general-purpose counter, watchdog, and supply supervisor operational, full RAM retention, fast wakeup:
      1.4 µA (Typical) at 3 V
  - Off mode (LPM4)
    Full RAM retention, supply supervisor operational, fast wakeup:
    1.1 µA at 3 V (typical)
  - Shutdown mode (LPM4.5)
    0.18 µA at 3 V (typical)
- Wake up from standby mode in less than 5 µs
- 16-bit RISC architecture, extended memory, up to 25-MHz system clock
- Flexible power-management system
  - Fully integrated LDO with programmable regulated core supply voltage
  - Supply voltage supervision, monitoring, and brownout
- Unified clock system (UCS)
  - FLL control loop for frequency stabilization
  - Low-power low-frequency internal clock source (VLO)
  - Low-frequency trimmed internal reference source (REFO)
  - 32-kHz watch crystals (XT1)
  - High-frequency crystals up to 32 MHz (XT2)
- 16-bit Timer TA0, Timer_A with five capture/compare registers
- 16-bit Timer TA1, Timer_A with three capture/compare registers
- 16-bit Timer TA2, Timer_A with three capture/compare registers
- 16-bit Timer TB0, Timer_B with seven capture/compare shadow registers
- Two universal serial communication interfaces (USCIs)
  - USCI_A0 and USCI_A1
    - Enhanced UART supports automatic baud-rate detection
    - IrDA encoder and decoder
    - Synchronous SPI
  - USCI_B0 and USCI_B1
    - I^2C
    - Synchronous SPI
- Integrated 3.3-V power system
- 10-bit analog-to-digital converter (ADC) with window comparator
- Comparator
- Hardware multiplier supports 32-bit operations
- Serial onboard programming, no external programming voltage needed
- 3-channel internal DMA
- Basic timer with RTC feature
- Device Comparison summarizes the available family members

1.2 Applications

- Analog and digital sensor systems
- Digital motor control
- Remote controls
- Thermostats
- Digital timers
- Hand-held meters

An IMPORTANT NOTICE at the end of this data sheet addresses availability, warranty, changes, use in safety-critical applications, intellectual property matters and other important disclaimers. PRODUCTION DATA.

1.3 Description

The TI MSP family of ultra-low-power microcontrollers consists of several devices featuring different sets of peripherals targeted for various applications. The architecture, combined with five low-power modes, is optimized to achieve extended battery life in portable measurement applications. The device features a powerful 16-bit RISC CPU, 16-bit registers, and constant generators that contribute to maximum code efficiency. The digitally controlled oscillator (DCO) allows the device to wake up from low-power modes to active mode in less than 5 µs.

The MSP430F5310, MSP430F5309, and MSP430F5308 devices are microcontroller configurations with a 3.3-V LDO, four 16-bit timers, a high-performance 10-bit ADC, two USCIs [(1)], a hardware multiplier, DMA, an RTC module with alarm capabilities, and 31 or 47 I/O pins.

The MSP430F5304 device is a configuration with a 3.3-V LDO, four 16-bit timers, a high-performance 10-bit ADC, one USCI, a hardware multiplier, DMA, an RTC module with alarm capabilities, and 31 I/O pins.

For complete module descriptions, see the *MSP430F5xx and MSP430F6xx Family User's Guide*.

(1) In the 48-pin packages, the USCI functions that are pinned out are limited to what the user configures on port 4 with the port mapping controller. It may not be possible to bring out all functions simultaneously.

Device Information[(1)]

PART NUMBER	PACKAGE	BODY SIZE[(2)]
MSP430F5310IRGC	VQFN (64)	9 mm × 9 mm
MSP430F5310IPT	LQFP (48)	7 mm × 7 mm
MSP430F5310IRGZ	VQFN (48)	7 mm × 7 mm
MSP430F5310IZXH	nFBGA (80)	5 mm × 5 mm
MSP430F5310IZQE[(3)]	MicroStar Junior™ BGA (80)	5 mm × 5 mm

(1) For the most current part, package, and ordering information, see the *Package Option Addendum* in Section 8, or see the TI website at www.ti.com.
(2) The sizes shown here are approximations. For the package dimensions with tolerances, see the *Mechanical Data* in Section 8.
(3) All orderable part numbers in the ZQE package have been changed to a status of Last Time Buy. Visit the Product life cycle page for details on this status.

Copyright © 2010–2020, Texas Instruments Incorporated

1.4 Functional Block Diagrams

Figure 1-1 through Figure 1-3 show the functional block diagrams.

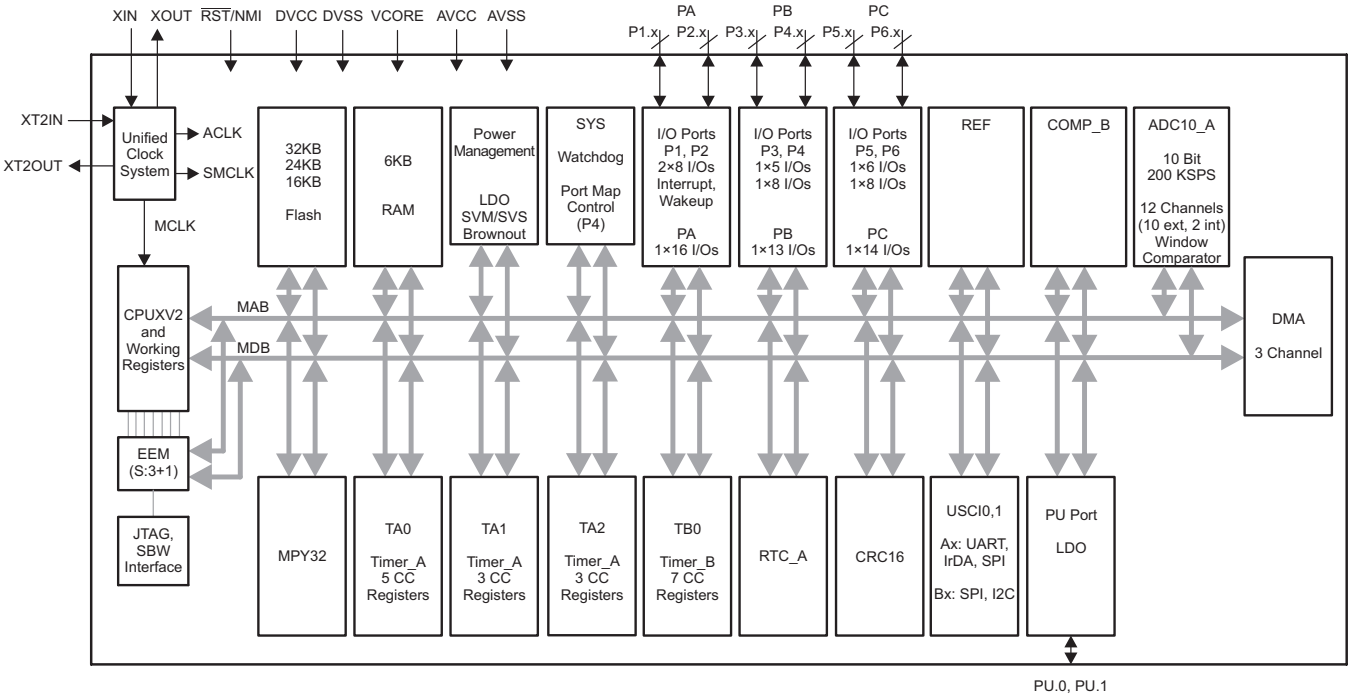

Figure 1-1. Functional Block Diagram – RGC, ZXH, or ZQE Package – MSP430F5310, MSP430F5309, MSP430F5308

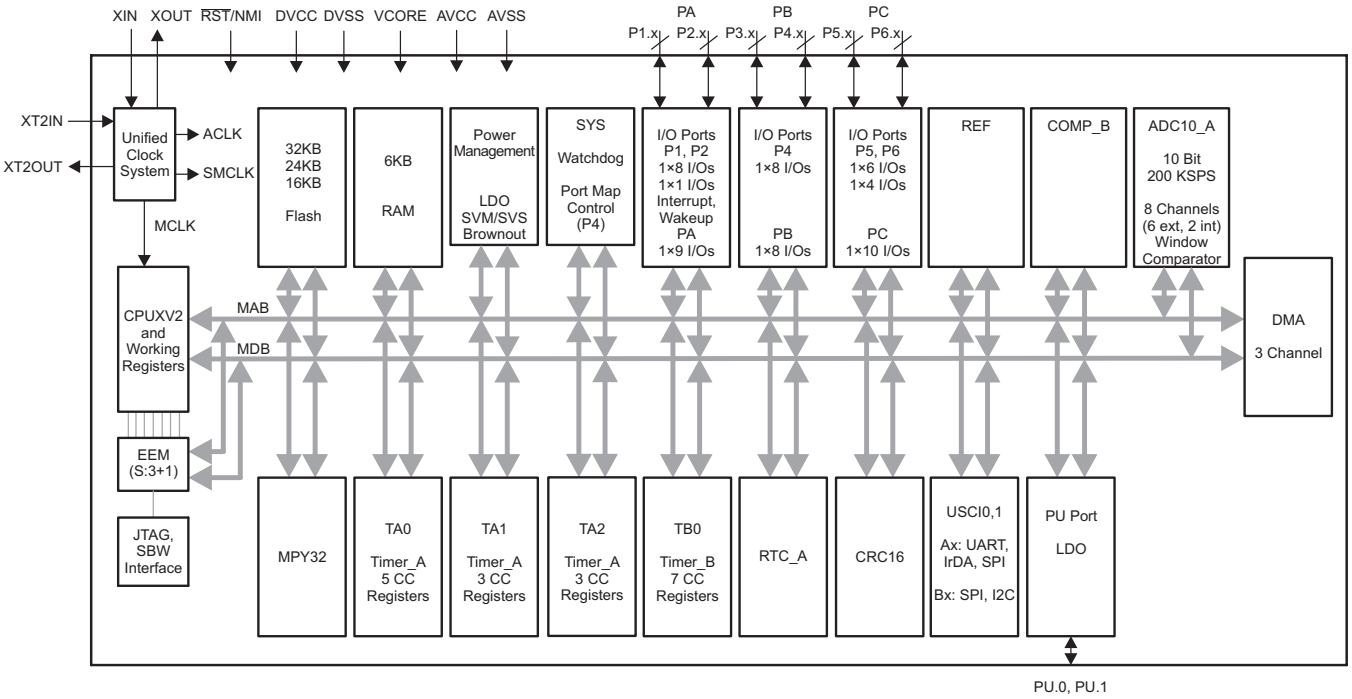

NOTE: See Table 3-1 for limitations on the simultaneous availability of USCI module signals.

Figure 1-2. Functional Block Diagram – RGZ or PT Package – MSP430F5310, MSP430F5309, MSP430F5308

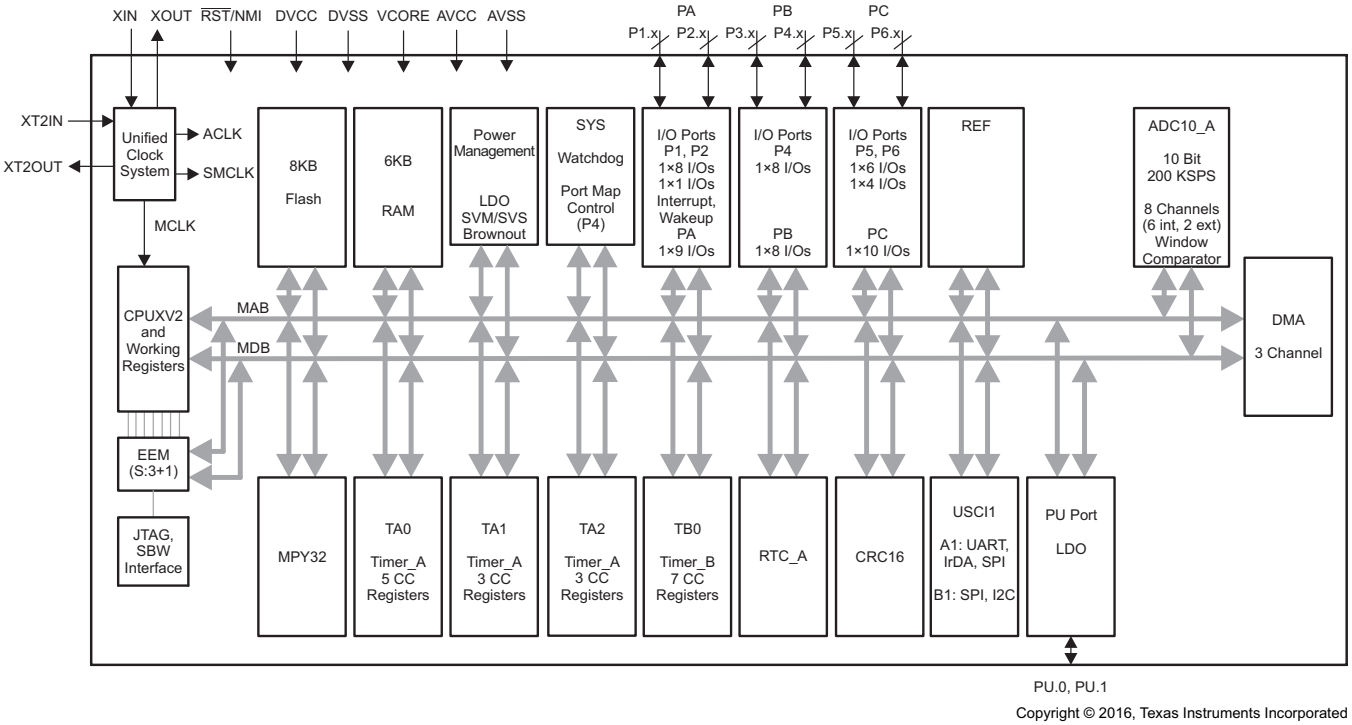

Figure 1-3. Functional Block Diagram – RGZ or PT Package – MSP430F5304

Table of Contents

1 Device Overview **1**
1.1 Features 1
1.2 Applications 1
1.3 Description 2
1.4 Functional Block Diagrams 3
2 Revision History **6**
3 Device Comparison **7**
3.1 Related Products 7
4 Terminal Configuration and Functions **8**
4.1 Pin Diagrams 8
4.2 Signal Descriptions 12
5 Specifications **16**
5.1 Absolute Maximum Ratings 16
5.2 ESD Ratings 16
5.3 Recommended Operating Conditions 16
5.4 Active Mode Supply Current Into V_{CC} Excluding External Current 17
5.5 Low-Power Mode Supply Currents (Into V_{CC}) Excluding External Current 18
5.6 Thermal Resistance Characteristics 19
5.7 Schmitt-Trigger Inputs – General-Purpose I/O (P1.0 to P1.7, P2.0 to P2.7, P3.0 to P3.4, P4.0 to P4.7) (P5.0 to P5.5, P6.0 to P6.7, PJ.0 to PJ.3, $\overline{\text{RST}}$/NMI) 20
5.8 Inputs – Ports P1 and P2 (P1.0 to P1.7, P2.0 to P2.7) 20
5.9 Leakage Current – General-Purpose I/O (P1.0 to P1.7, P2.0 to P2.7, P3.0 to P3.4, P4.0 to P4.7) (P5.0 to P5.5, P6.0 to P6.7, PJ.0 to PJ.3, RST/NMI) 20
5.10 Outputs – General-Purpose I/O (Full Drive Strength) (P1.0 to P1.7, P2.0 to P2.7, P3.0 to P3.4, P4.0 to P4.7, P5.0 to P5.5, P6.0 to P6.7, PJ.0 to PJ.3) 20
5.11 Outputs – General-Purpose I/O (Reduced Drive Strength) (P1.0 to P1.7, P2.0 to P2.7, P3.0 to P3.4, P4.0 to P4.7, P5.0 to P5.5, P6.0 to P6.7, PJ.0 to PJ.3) 21
5.12 Output Frequency – General-Purpose I/O (P1.0 to P1.7, P2.0 to P2.7, P3.0 to P3.4, P4.0 to P4.7, P5.0 to P5.5, P6.0 to P6.7, PJ.0 to PJ.3) 21
5.13 Typical Characteristics – Outputs, Reduced Drive Strength (PxDS.y = 0) 22
5.14 Crystal Oscillator, XT1, Low-Frequency Mode 23
5.15 Crystal Oscillator, XT2 24
5.16 Internal Very-Low-Power Low-Frequency Oscillator (VLO) 25
5.17 Internal Reference, Low-Frequency Oscillator (REFO) 25
5.18 DCO Frequency 26
5.19 PMM, Brownout Reset (BOR) 27
5.20 PMM, Core Voltage 27
5.21 PMM, SVS High Side 27
5.22 PMM, SVM High Side 28
5.23 PMM, SVS Low Side 28
5.24 PMM, SVM Low Side 28
5.25 Wake-up Times From Low-Power Modes and Reset 29
5.26 Timer_A 29
5.27 Timer_B 29
5.28 USCI (UART Mode) Clock Frequency 30
5.29 USCI (UART Mode) 30
5.30 USCI (SPI Master Mode) Clock Frequency 30
5.31 USCI (SPI Master Mode) 30
5.32 USCI (SPI Slave Mode) 32
5.33 USCI (I^2C Mode) 34
5.34 10-Bit ADC, Power Supply and Input Range Conditions 35
5.35 10-Bit ADC, Timing Parameters 35
5.36 10-Bit ADC, Linearity Parameters 36
5.37 REF, External Reference 36
5.38 REF, Built-In Reference 37
5.39 Comparator_B 38
5.40 Ports PU.0 and PU.1 39
5.41 LDO-PWR (LDO Power System) 40
5.42 Flash Memory 41
5.43 JTAG and Spy-Bi-Wire Interface 41
6 Detailed Description **42**
6.1 CPU (Link to User's Guide) 42
6.2 Operating Modes 43
6.3 Interrupt Vector Addresses 44
6.4 Memory Organization 45
6.5 Bootloader (BSL) 46
6.6 JTAG Operation 46
6.7 Flash Memory (Link to User's Guide) 47
6.8 RAM (Link to User's Guide) 47
6.9 Peripherals 47
6.10 Peripheral File Map 58
6.11 Input/Output Diagrams 69
6.12 Device Descriptors 85
7 Device and Documentation Support **88**
7.1 Getting Started and Next Steps 88
7.2 Device Nomenclature 88
7.3 Tools and Software 90
7.4 Documentation Support 92
7.5 Related Links 93
7.6 Community Resources 93
7.7 Trademarks 93
7.8 Electrostatic Discharge Caution 93
7.9 Glossary 93
8 Mechanical, Packaging, and Orderable Information **94**

2 Revision History

NOTE: Page numbers for previous revisions may differ from page numbers in the current version.

Changes from September 26, 2018 to May 1, 2020	Page
• Throughout the document, added the ZXH package	1
• Changed the status of all orderable part numbers in the ZQE package	2

Copyright © 2010–2020, Texas Instruments Incorporated

3 Device Comparison

Table 3-1 summarizes the available family members.

Table 3-1. Family Members(1)(2)

DEVICE	PROGRAM MEMORY (KB)	SRAM (KB)	Timer_A(3)	Timer_B(4)	USCI_A: UART, LIN, IrDA, SPI	USCI_B: SPI, I²C	ADC10_A (CH)	Comp_B (CH)	I/Os	PACKAGE
MSP430F5310	32	6	5, 3, 3	7	2	2	10 ext, 2 int	8	47	64 RGC, 80 ZXH, 80 ZQE
					2(5)	2(5)	6 ext, 2 int	4	31	48 PT, 48 RGZ
MSP430F5309	24	6	5, 3, 3	7	2	2	10 ext, 2 int	8	47	64 RGC, 80 ZXH, 80 ZQE
					2(5)	2(5)	6 ext, 2 int	4	31	48 PT, 48 RGZ,
MSP430F5308	16	6	5, 3, 3	7	2	2	10 ext, 2 int	8	47	64 RGC, 80 ZXH, 80 ZQE
					2(5)	2(5)	6 ext, 2 int	4	31	48 PT, 48 RGZ,
MSP430F5304	8	6	5, 3, 3	7	1	1	6 ext, 2 int	-	31	48 PT, 48 RGZ

(1) For the most current package and ordering information, see the Package Option Addendum at the end of this document, or see the TI website at www.ti.com.
(2) Package drawings, standard packing quantities, thermal data, symbolization, and PCB design guidelines are available at www.ti.com/packaging.
(3) Each number in the sequence represents an instantiation of Timer_A with its associated number of capture compare registers and PWM output generators available. For example, a number sequence of 3, 5 would represent two instantiations of Timer_A, the first instantiation having 3 and the second instantiation having 5 capture compare registers and PWM output generators, respectively.
(4) Each number in the sequence represents an instantiation of Timer_B with its associated number of capture compare registers and PWM output generators available. For example, a number sequence of 3, 5 would represent two instantiations of Timer_B, the first instantiation having 3 and the second instantiation having 5 capture compare registers and PWM output generators, respectively.
(5) Two USCIs are available; however, pinned out functions are limited to what the user configures on port 4 with the port mapping controller (see Section 6.9.2). It may not be possible to bring out all functions simultaneously.

3.1 Related Products

For information about other devices in this family of products or related products, see the following links.

Products for TI Microcontrollers TI's low-power and high-performance MCUs, with wired and wireless connectivity options, are optimized for a broad range of applications.

Products for MSP430 Ultra-Low-Power Microcontrollers One platform. One ecosystem. Endless possibilities. Enabling the connected world with innovations in ultra-low-power microcontrollers with advanced peripherals for precise sensing and measurement.

Companion Products for MSP430F5310 Review products that are frequently purchased or used in conjunction with this product.

Reference Designs for MSP430F5310 Find reference designs that leverage the best in TI technology to solve your system-level challenges.

4 Terminal Configuration and Functions

4.1 Pin Diagrams

Figure 4-1 shows the pinout for the MSP430F5310, MSP430F5309, and MSP430F5308 devices in the 64-pin RGC package.

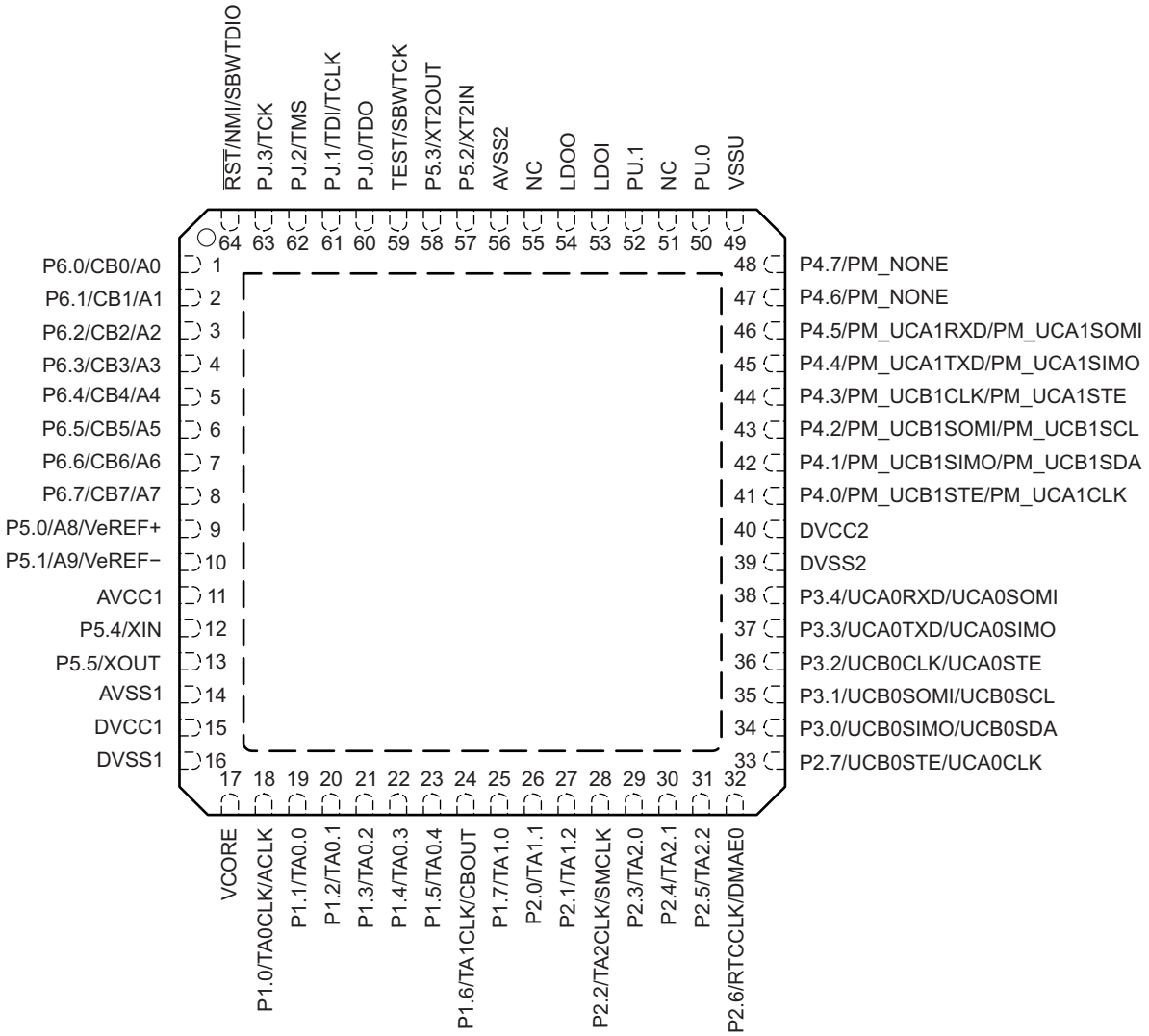

NOTE: TI recommends connection of exposed thermal pad to V_{SS}.

Figure 4-1. 64-Pin RGC Package (Top View)

Copyright © 2010–2020, Texas Instruments Incorporated

Figure 4-2 shows the pinout for the MSP430F5310, MSP430F5309, and MSP430F5308 devices in the 80-pin ZXH or ZQE package.

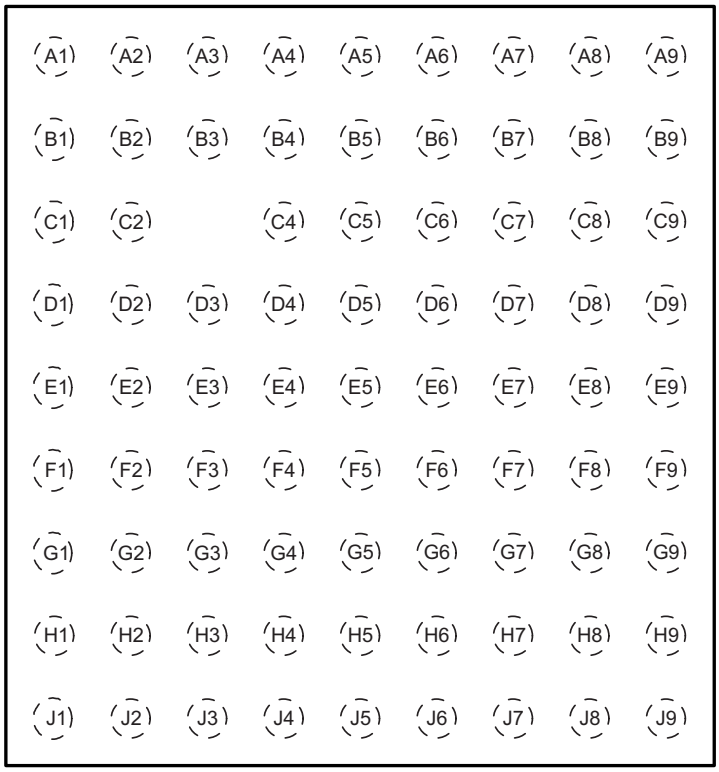

Figure 4-2. 80-Pin ZXH or ZQE Package (Top View)

Figure 4-3 shows the pinout for the MSP430F5310, MSP430F5309, and MSP430F5308 devices in the 48-pin RGZ and PT packages.

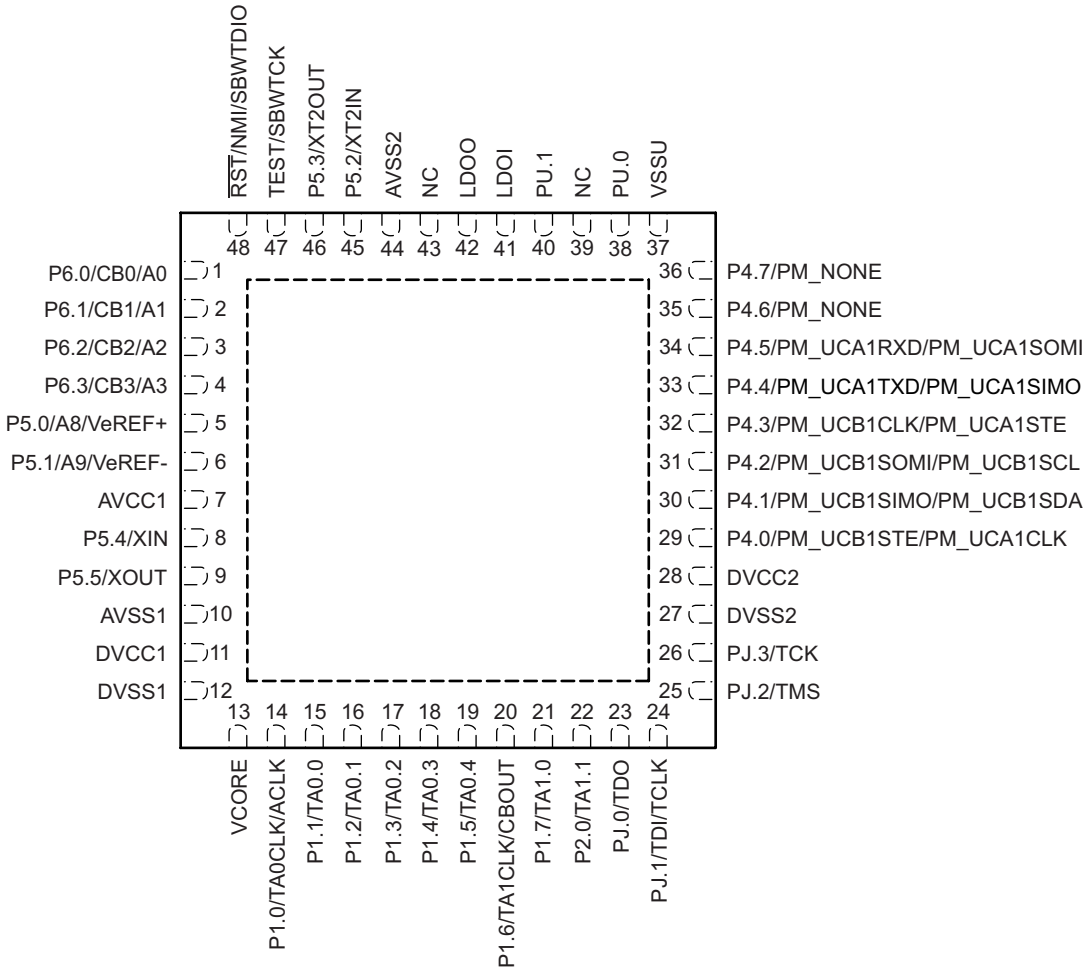

NOTE: For the RGZ package, TI recommends connection of exposed thermal pad to V_{SS}.

Figure 4-3. 48-Pin RGZ or PT Package (Top View) – MSP430F5310, MSP430F5309, MSP430F5308

Copyright © 2010–2020, Texas Instruments Incorporated

Figure 4-4 shows the pinout for the MSP430F5304 device in the 48-pin RGZ and PT packages.

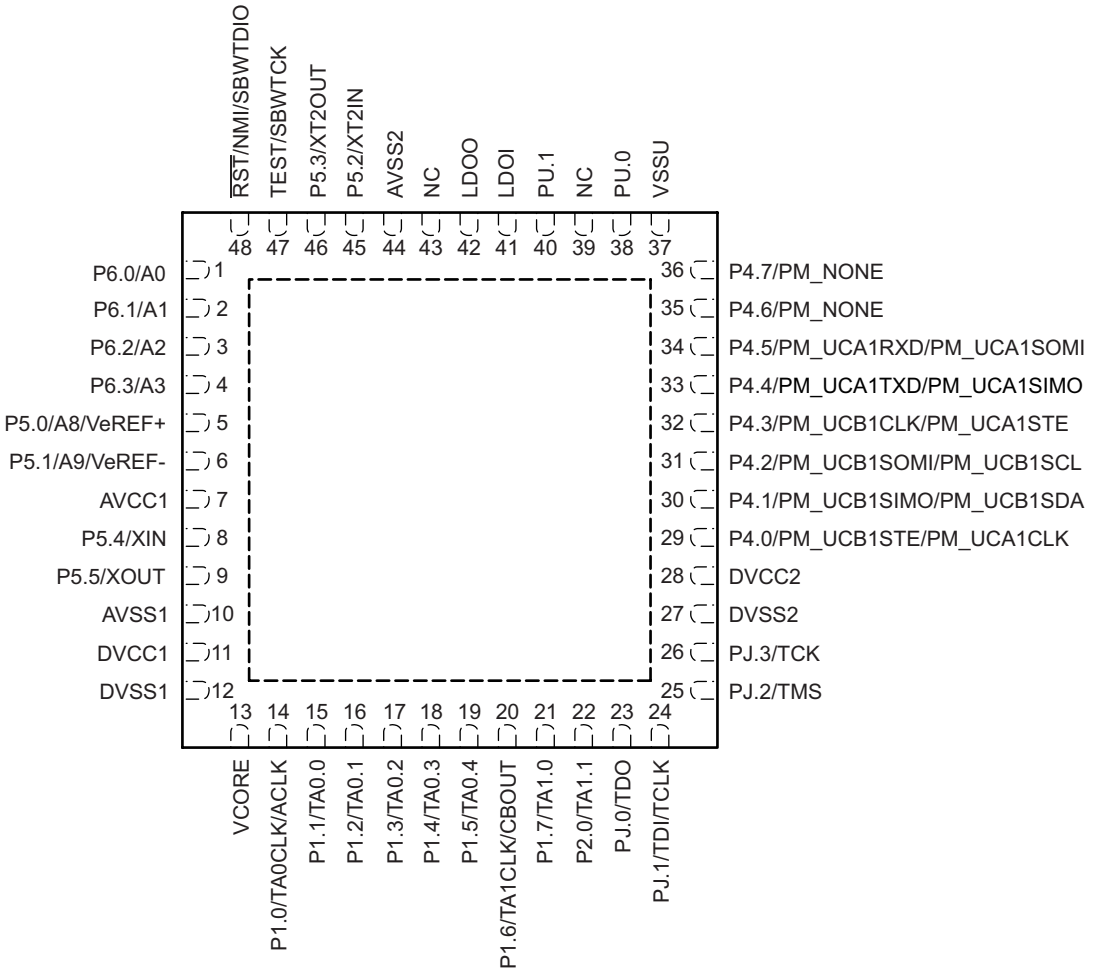

NOTE: For the RGZ package, TI recommends connection of exposed thermal pad to V_{SS}.

Figure 4-4. 48-Pin RGZ or RT Package (Top View) – MSP430F5304

4.2 Signal Descriptions

Table 4-1 describes the signals for all device variants and package options.

Table 4-1. Signal Descriptions

TERMINAL				I/O (1)	DESCRIPTION
NAME	NO.				
	RGC	RGZ, PT	ZXH, ZQE		
P6.4/CB4/A4	5	N/A	C1	I/O	General-purpose digital I/O Comparator_B input CB4 (not available on RGZ or PT package devices) Analog input A4 for ADC (not available on RGZ or PT package devices)
P6.5/CB5/A5	6	N/A	D2	I/O	General-purpose digital I/O Comparator_B input CB5 (not available on RGZ or PT package devices) Analog input A5 for ADC (not available on RGZ or PT package devices)
P6.6/CB6/A6	7	N/A	D1	I/O	General-purpose digital I/O Comparator_B input CB6 (not available on RGZ or PT package devices) Analog input A6 for ADC (not available on RGZ or PT package devices)
P6.7/CB7/A7	8	N/A	D3	I/O	General-purpose digital I/O Comparator_B input CB7 (not available on RGZ or PT package devices) Analog input A7 for ADC (not available on RGZ or PT package devices)
P5.0/A8/VeREF+	9	5	E1	I/O	General-purpose digital I/O Analog input A8 for ADC Input for an external reference voltage to the ADC
P5.1/A9/VeREF-	10	6	E2	I/O	General-purpose digital I/O Analog input A9 for ADC Negative terminal for an externally provided ADC reference
AVCC1	11	7	F2		Analog power supply
P5.4/XIN	12	8	F1	I/O	General-purpose digital I/O Input terminal for crystal oscillator XT1
P5.5/XOUT	13	9	G1	I/O	General-purpose digital I/O Output terminal of crystal oscillator XT1
AVSS1	14	10	G2		Analog ground supply
DVCC1	15	11	H1		Digital power supply
DVSS1	16	12	J1		Digital ground supply
VCORE (2)	17	13	J2		Regulated core power supply output (internal use only, no external current loading)
P1.0/TA0CLK/ACLK	18	14	H2	I/O	General-purpose digital I/O with port interrupt TA0 clock signal TA0CLK input ACLK output (divided by 1, 2, 4, 8, 16, or 32)
P1.1/TA0.0	19	15	H3	I/O	General-purpose digital I/O with port interrupt TA0 CCR0 capture: CCI0A input, compare: Out0 output BSL transmit output
P1.2/TA0.1	20	16	J3	I/O	General-purpose digital I/O with port interrupt TA0 CCR1 capture: CCI1A input, compare: Out1 output BSL receive input
P1.3/TA0.2	21	17	G4	I/O	General-purpose digital I/O with port interrupt TA0 CCR2 capture: CCI2A input, compare: Out2 output
P1.4/TA0.3	22	18	H4	I/O	General-purpose digital I/O with port interrupt TA0 CCR3 capture: CCI3A input compare: Out3 output
P1.5/TA0.4	23	19	J4	I/O	General-purpose digital I/O with port interrupt TA0 CCR4 capture: CCI4A input, compare: Out4 output
P1.6/TA1CLK/CBOUT	24	20	G5	I/O	General-purpose digital I/O with port interrupt TA1 clock signal TA1CLK input Comparator_B output
P1.7/TA1.0	25	21	H5	I/O	General-purpose digital I/O with port interrupt TA1 CCR0 capture: CCI0A input, compare: Out0 output

(1) I = input, O = output, N/A = not available
(2) VCORE is for internal use only. No external current loading is possible. VCORE should only be connected to the recommended capacitor value, C_{VCORE}.

Copyright © 2010–2020, Texas Instruments Incorporated

Table 4-1. Signal Descriptions (continued)

TERMINAL				I/O(1)	DESCRIPTION
NAME	NO.				
	RGC	RGZ, PT	ZXH, ZQE		
P2.0/TA1.1	26	22	J5	I/O	General-purpose digital I/O with port interrupt TA1 CCR1 capture: CCI1A input, compare: Out1 output
P2.1/TA1.2	27	N/A	G6	I/O	General-purpose digital I/O with port interrupt TA1 CCR2 capture: CCI2A input, compare: Out2 output
P2.2/TA2CLK/SMCLK	28	N/A	J6	I/O	General-purpose digital I/O with port interrupt TA2 clock signal TA2CLK input ; SMCLK output
P2.3/TA2.0	29	N/A	H6	I/O	General-purpose digital I/O with port interrupt TA2 CCR0 capture: CCI0A input, compare: Out0 output
P2.4/TA2.1	30	N/A	J7	I/O	General-purpose digital I/O with port interrupt TA2 CCR1 capture: CCI1A input, compare: Out1 output
P2.5/TA2.2	31	N/A	J8	I/O	General-purpose digital I/O with port interrupt TA2 CCR2 capture: CCI2A input, compare: Out2 output
P2.6/RTCCLK/DMAE0	32	N/A	J9	I/O	General-purpose digital I/O with port interrupt RTC clock output for calibration DMA external trigger input
P2.7/UCB0STE/UCA0CLK	33	N/A	H7	I/O	General-purpose digital I/O with port interrupt Slave transmit enable – USCI_B0 SPI mode Clock signal input – USCI_A0 SPI slave mode Clock signal output – USCI_A0 SPI master mode
P3.0/UCB0SIMO/UCB0SDA	34	N/A	H8	I/O	General-purpose digital I/O Slave in, master out – USCI_B0 SPI mode I^2C data – USCI_B0 I^2C mode
P3.1/UCB0SOMI/UCB0SCL	35	N/A	H9	I/O	General-purpose digital I/O Slave out, master in – USCI_B0 SPI mode I^2C clock – USCI_B0 I^2C mode
P3.2/UCB0CLK/UCA0STE	36	N/A	G8	I/O	General-purpose digital I/O Clock signal input – USCI_B0 SPI slave mode Clock signal output – USCI_B0 SPI master mode Slave transmit enable – USCI_A0 SPI mode
P3.3/UCA0TXD/UCA0SIMO	37	N/A	G9	I/O	General-purpose digital I/O Transmit data – USCI_A0 UART mode Slave in, master out – USCI_A0 SPI mode
P3.4/UCA0RXD/UCA0SOMI	38	N/A	G7	I/O	General-purpose digital I/O Receive data – USCI_A0 UART mode Slave out, master in – USCI_A0 SPI mode
P4.0/PM_UCB1STE/ PM_UCA1CLK	41	29	E8	I/O	General-purpose digital I/O with reconfigurable port mapping secondary function Default mapping: Slave transmit enable – USCI_B1 SPI mode Default mapping: Clock signal input – USCI_A1 SPI slave mode Default mapping: Clock signal output – USCI_A1 SPI master mode
P4.1/PM_UCB1SIMO/ PM_UCB1SDA	42	30	E7	I/O	General-purpose digital I/O with reconfigurable port mapping secondary function Default mapping: Slave in, master out – USCI_B1 SPI mode Default mapping: I^2C data – USCI_B1 I^2C mode
P4.2/PM_UCB1SOMI/ PM_UCB1SCL	43	31	D9	I/O	General-purpose digital I/O with reconfigurable port mapping secondary function Default mapping: Slave out, master in – USCI_B1 SPI mode Default mapping: I^2C clock – USCI_B1 I^2C mode
P4.3/PM_UCB1CLK/ PM_UCA1STE	44	32	D8	I/O	General-purpose digital I/O with reconfigurable port mapping secondary function Default mapping: Clock signal input – USCI_B1 SPI slave mode Default mapping: Clock signal output – USCI_B1 SPI master mode Default mapping: Slave transmit enable – USCI_A1 SPI mode
DVSS2	39	27	F9		Digital ground supply
DVCC2	40	28	E9		Digital power supply

Table 4-1. Signal Descriptions (continued)

TERMINAL				I/O[1]	DESCRIPTION
NAME	NO.				
	RGC	RGZ, PT	ZXH, ZQE		
P4.4/PM_UCA1TXD/ PM_UCA1SIMO	45	33	D7	I/O	General-purpose digital I/O with reconfigurable port mapping secondary function Default mapping: Transmit data – USCI_A1 UART mode Default mapping: Slave in, master out – USCI_A1 SPI mode
P4.5/PM_UCA1RXD/ PM_UCA1SOMI	46	34	C9	I/O	General-purpose digital I/O with reconfigurable port mapping secondary function Default mapping: Receive data – USCI_A1 UART mode Default mapping: Slave out, master in – USCI_A1 SPI mode
P4.6/PM_NONE	47	35	C8	I/O	General-purpose digital I/O with reconfigurable port mapping secondary function Default mapping: no secondary function.
P4.7/PM_NONE	48	36	C7	I/O	General-purpose digital I/O with reconfigurable port mapping secondary function Default mapping: no secondary function.
VSSU	49	37	B8, B9		PU ground supply
PU.0	50	38	A9	I/O	General-purpose digital I/O - controlled by PU control register. Port U is supplied by the LDOO rail.
NC	51	39	B7	I/O	No connect.
PU.1	52	40	A8	I/O	General-purpose digital I/O - controlled by PU control register Port U is supplied by the LDOO rail.
LDOI	53	41	A7		LDO input
LDOO	54	42	A6		LDO output
NC	55	43	B6		No connect.
AVSS2	56	44	A5		Analog ground supply
P5.2/XT2IN	57	45	B5	I/O	General-purpose digital I/O Input terminal for crystal oscillator XT2
P5.3/XT2OUT	58	46	B4	I/O	General-purpose digital I/O Output terminal of crystal oscillator XT2
TEST/SBWTCK	59	47	A4	I	Test mode pin – select digital I/O on JTAG pins Spy-Bi-Wire input clock
PJ.0/TDO	60	23	C5	I/O	General-purpose digital I/O Test data output port
PJ.1/TDI/TCLK	61	24	C4	I/O	General-purpose digital I/O Test data input or test clock input
PJ.2/TMS	62	25	A3	I/O	General-purpose digital I/O Test mode select
PJ.3/TCK	63	26	B3	I/O	General-purpose digital I/O Test clock
$\overline{\text{RST}}$/NMI/SBWTDIO	64	48	A2	I/O	Reset input active low[3] Nonmaskable interrupt input Spy-Bi-Wire data input/output
P6.0/CB0/A0	1	1	A1	I/O	General-purpose digital I/O Comparator_B input CB0 (not available on F5304 device) Analog input A0 for ADC
P6.1/CB1/A1	2	2	B2	I/O	General-purpose digital I/O Comparator_B input CB1 (not available on F5304 device) Analog input A1 for ADC
P6.2/CB2/A2	3	3	B1	I/O	General-purpose digital I/O Comparator_B input CB2 (not available on F5304 device) Analog input A2 for ADC

(3) When this pin is configured as reset, the internal pullup resistor is enabled by default.

Copyright © 2010–2020, Texas Instruments Incorporated

Table 4-1. Signal Descriptions (continued)

TERMINAL				I/O[1]	DESCRIPTION
NAME	NO.				
	RGC	RGZ, PT	ZXH, ZQE		
P6.3/CB3/A3	4	4	C2	I/O	General-purpose digital I/O Comparator_B input CB3 (not available on F5304 device) Analog input A3 for ADC
Reserved	N/A	N/A	[4]		
Thermal Pad	Pad	Pad	N/A		Exposed thermal pad on QFN packages. TI recommends connection to V_{SS} (not available on PT package devices).

(4) C6, D4, D5, D6, E3, E4, E5, E6, F3, F4, F5, F6, F7, F8, G3 are reserved and should be connected to ground.

5 Specifications

All graphs in this section are for typical conditions, unless otherwise noted.

Typical (TYP) values are specified at V_{CC} = 3.3 V and T_A = 25°C, unless otherwise noted.

5.1 Absolute Maximum Ratings[1]

over operating free-air temperature range (unless otherwise noted)

	MIN	MAX	UNIT
Voltage applied at V_{CC} to V_{SS}	–0.3	4.1	V
Voltage applied to any pin (excluding VCORE, LDOI)[2]	–0.3	V_{CC} + 0.3	V
Diode current at any device pin		±2	mA
Maximum junction temperature, T_J		95	°C
Storage temperature, T_{stg}[3]	–55	150	°C

(1) Stresses beyond those listed under *Absolute Maximum Ratings* may cause permanent damage to the device. These are stress ratings only, and functional operation of the device at these or any other conditions beyond those indicated under *Recommended Operating Conditions* is not implied. Exposure to absolute-maximum-rated conditions for extended periods may affect device reliability.
(2) All voltages referenced to V_{SS}. VCORE is for internal device use only. No external DC loading or voltage should be applied.
(3) Higher temperature may be applied during board soldering according to the current JEDEC J-STD-020 specification with peak reflow temperatures not higher than classified on the device label on the shipping boxes or reels.

5.2 ESD Ratings

			VALUE	UNIT
$V_{(ESD)}$	Electrostatic discharge	Human-body model (HBM), per ANSI/ESDA/JEDEC JS-001[1]	±1000	V
		Charged-device model (CDM), per JEDEC specification JESD22-C101[2]	±250	

(1) JEDEC document JEP155 states that 500-V HBM allows safe manufacturing with a standard ESD control process. Manufacturing with less than 500-V HBM is possible with the necessary precautions. Pins listed as ±1000 V may actually have higher performance.
(2) JEDEC document JEP157 states that 250-V CDM allows safe manufacturing with a standard ESD control process. Manufacturing with less than 250-V CDM is possible with the necessary precautions. Pins listed as ±250 V may actually have higher performance.

5.3 Recommended Operating Conditions

			MIN	NOM	MAX	UNIT
V_{CC}	Supply voltage during program execution and flash programming (AVCC = DVCC1 = DVCC2 = V_{CC})[1][2]	PMMCOREVx = 0	1.8		3.6	V
		PMMCOREVx = 0, 1	2.0		3.6	
		PMMCOREVx = 0, 1, 2	2.2		3.6	
		PMMCOREVx = 0, 1, 2, 3	2.4		3.6	
V_{SS}	Supply voltage (AV_{SS} = $DV_{SS1/2}$ = DV_{SS})			0		V
T_A	Operating free-air temperature		–40		85	°C
T_J	Operating junction temperature		–40		85	°C
C_{VCORE}	Capacitor at VCORE[3]			470		nF
C_{DVCC}/ C_{VCORE}	Capacitor ratio of DVCC to VCORE		10			
f_{SYSTEM}	Processor frequency (maximum MCLK frequency) [4] (see Figure 5-1)	PMMCOREVx = 0, 1.8 V ≤ V_{CC} ≤ 3.6 V (default condition)	0		8.0	MHz
		PMMCOREVx = 1, 2.0 V ≤ V_{CC} ≤ 3.6 V	0		12.0	
		PMMCOREVx = 2, 2.2 V ≤ V_{CC} ≤ 3.6 V	0		20.0	
		PMMCOREVx = 3, 2.4 V ≤ V_{CC} ≤ 3.6 V	0		25.0	

(1) TI recommends powering AVCC and DVCC from the same source. A maximum difference of 0.3 V between AVCC and DVCC can be tolerated during power up and operation.
(2) The minimum supply voltage is defined by the supervisor SVS levels when it is enabled. See the threshold parameters in Section 5.21 for the exact values and further details.
(3) A capacitor tolerance of ±20% or better is required.
(4) Modules may have a different maximum input clock specification. See the specification of the respective module in this data sheet.

Copyright © 2010–2020, Texas Instruments Incorporated

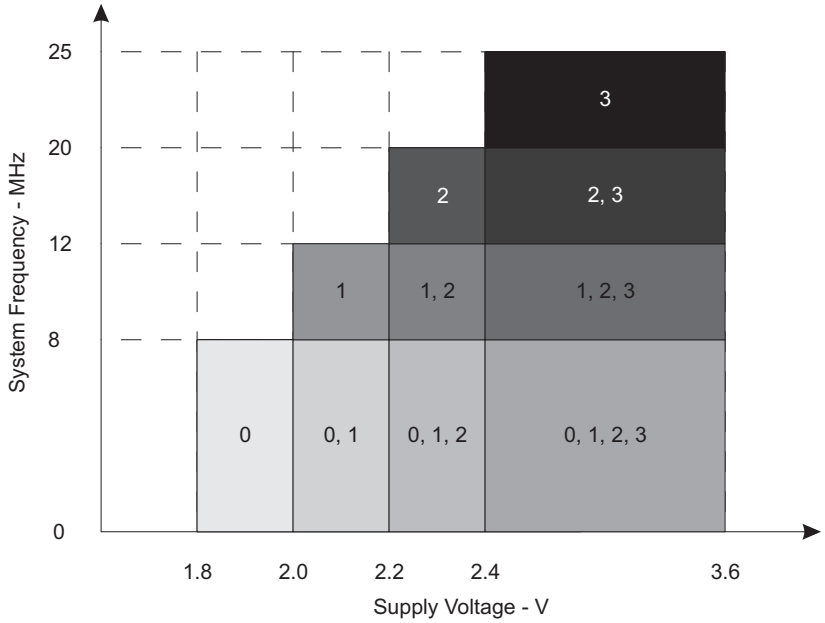

NOTE: The numbers within the fields denote the supported PMMCOREVx settings.

Figure 5-1. Maximum System Frequency

5.4 Active Mode Supply Current Into V_{CC} Excluding External Current

over recommended operating free-air temperature (unless otherwise noted) (1) (2) (3)

PARAMETER	EXECUTION MEMORY	V_{CC}	PMMCOREVx	FREQUENCY ($f_{DCO} = f_{MCLK} = f_{SMCLK}$)										UNIT
				1 MHz		8 MHz		12 MHz		20 MHz		25 MHz		
				TYP	MAX	TYP	MAX	TYP	MAX	TYP	MAX	TYP	MAX	
$I_{AM,\ Flash}$	Flash	3 V	0	0.25	0.27	1.55	1.68							mA
			1	0.28		1.74		2.58	2.78					
			2	0.30		1.91		2.84		4.68	5.06			
			3	0.32		2.09		3.10		5.13		6.0	6.5	
$I_{AM,\ RAM}$	RAM	3 V	0	0.17	0.19	0.91	1.00							mA
			1	0.19		1.03		1.54	1.67					
			2	0.20		1.16		1.73		2.84	3.11			
			3	0.21		1.24		1.87		3.1		3.9	4.3	

(1) All inputs are tied to 0 V or to V_{CC}. Outputs do not source or sink any current.
(2) The currents are characterized with a Micro Crystal MS1V-T1K crystal with a load capacitance of 12.5 pF. The internal and external load capacitance are chosen to closely match the required 12.5 pF.
(3) Characterized with program executing typical data processing. LDO disabled (LDOEN = 0).
f_{ACLK} = 32786 Hz, $f_{DCO} = f_{MCLK} = f_{SMCLK}$ at specified frequency.
XTS = CPUOFF = SCG0 = SCG1 = OSCOFF= SMCLKOFF = 0.

5.5 Low-Power Mode Supply Currents (Into V_{CC}) Excluding External Current

over recommended ranges of supply voltage and operating free-air temperature (unless otherwise noted) (1) (2)

PARAMETER		V_{CC}	PMMCOREVx	TEMPERATURE (T_A)								UNIT
				–40°C		25°C		60°C		85°C		
				TYP	MAX	TYP	MAX	TYP	MAX	TYP	MAX	
$I_{LPM0,1MHz}$	Low-power mode 0 (3) (4)	2.2 V	0	73		77	85	80		80	97	µA
		3 V	3	79		83	92	88		95	105	
I_{LPM2}	Low-power mode 2 (5) (4)	2.2 V	0	6.5		6.5	8	7.5		8	11	µA
		3 V	3	7.0		7.0	9	7.9		8.9	13	
$I_{LPM3,XT1LF}$	Low-power mode 3, crystal mode (6) (4)	2.2 V	0	1.60		1.90		2.6		3.4		µA
			1	1.65		2.00		2.7		3.6		
			2	1.75		2.15		2.9		3.8		
		3 V	0	1.8		2.1	2.6	2.8		3.6	6.0	
			1	1.9		2.3		2.9		3.8		
			2	2.0		2.4		3.0		4.0		
			3	2.0		2.5	3.0	3.1		4.0	6.5	
$I_{LPM3,VLO}$	Low-power mode 3, VLO mode (7) (4)	3 V	0	1.1		1.3	1.8	1.9		2.7	5.0	µA
			1	1.1		1.4		2.0		2.8		
			2	1.2		1.5		2.1		2.9		
			3	1.3		1.5	2.0	2.2		3.0	5.5	
I_{LPM4}	Low-power mode 4 (8) (4)	3 V	0	0.9		1.1	1.5	1.8		2.5	4.8	µA
			1	1.1		1.2		2.0		2.6		
			2	1.2		1.2		2.1		2.7		
			3	1.3		1.3	1.6	2.2		2.8	5.0	
$I_{LPM4.5}$	Low-power mode 4.5 (9)	3 V		0.15		0.18	0.35	0.26		0.45	0.8	µA

(1) All inputs are tied to 0 V or to V_{CC}. Outputs do not source or sink any current.
(2) The currents are characterized with a Micro Crystal MS1V-T1K crystal with a load capacitance of 12.5 pF. The internal and external load capacitance are chosen to closely match the required 12.5 pF.
(3) Current for watchdog timer clocked by SMCLK included. ACLK = low-frequency crystal operation (XTS = 0, XT1DRIVEx = 0). CPUOFF = 1, SCG0 = 0, SCG1 = 0, OSCOFF = 0 (LPM0), f_{ACLK} = 32768 Hz, f_{MCLK} = 0 MHz, f_{SMCLK} = f_{DCO} = 1 MHz LDO disabled (LDOEN = 0).
(4) Current for brownout, high-side supervisor (SVS_H) normal mode included. Low-side supervisor (SVS_L) and low-side monitor (SVM_L) disabled. High-side monitor (SVM_H) disabled. RAM retention enabled.
(5) Current for watchdog timer and RTC clocked by ACLK included. ACLK = low-frequency crystal operation (XTS = 0, XT1DRIVEx = 0). CPUOFF = 1, SCG0 = 0, SCG1 = 1, OSCOFF = 0 (LPM2), f_{ACLK} = 32768 Hz, f_{MCLK} = 0 MHz, f_{SMCLK} = f_{DCO} = 0 MHz; DCO setting = 1-MHz operation, DCO bias generator enabled. LDO disabled (LDOEN = 0)
(6) Current for watchdog timer and RTC clocked by ACLK included. ACLK = low-frequency crystal operation (XTS = 0, XT1DRIVEx = 0). CPUOFF = 1, SCG0 = 1, SCG1 = 1, OSCOFF = 0 (LPM3), f_{ACLK} = 32768 Hz, f_{MCLK} = f_{SMCLK} = f_{DCO} = 0 MHz LDO disabled (LDOEN = 0)
(7) Current for watchdog timer and RTC clocked by ACLK included. ACLK = VLO. CPUOFF = 1, SCG0 = 1, SCG1 = 1, OSCOFF = 0 (LPM3), f_{ACLK} = f_{VLO}, f_{MCLK} = f_{SMCLK} = f_{DCO} = 0 MHz LDO disabled (LDOEN = 0)
(8) CPUOFF = 1, SCG0 = 1, SCG1 = 1, OSCOFF = 1 (LPM4), f_{DCO} = f_{ACLK} = f_{MCLK} = f_{SMCLK} = 0 MHz LDO disabled (LDOEN = 0)
(9) Internal regulator disabled. No data retention. CPUOFF = 1, SCG0 = 1, SCG1 = 1, OSCOFF = 1, PMMREGOFF = 1 (LPM4.5), f_{DCO} = f_{ACLK} = f_{MCLK} = f_{SMCLK} = 0 MHz

Copyright © 2010–2020, Texas Instruments Incorporated

5.6 Thermal Resistance Characteristics(1)

THERMAL METRIC			VALUE	UNIT
$R\theta_{JA}$	Junction-to-ambient thermal resistance, still air (2)	VQFN (RGC)	30	°C/W
		VQFN (RGZ)	28.6	
		LQFP (PT)	62.8	
		BGA (ZQE)	55.5	
$R\theta_{JC(TOP)}$	Junction-to-case (top) thermal resistance (3)	VQFN (RGC)	15.6	°C/W
		VQFN (RGZ)	14.4	
		LQFP (PT)	18.2	
		BGA (ZQE)	21.2	
$R\theta_{JC(BOTTOM)}$	Junction-to-case (bottom) thermal resistance (4)	VQFN (RGC)	1.6	°C/W
		VQFN (RGZ)	1.6	
		LQFP (PT)	N/A	
		BGA (ZQE)	N/A	
$R\theta_{JB}$	Junction-to-board thermal resistance (5)	VQFN (RGC)	8.9	°C/W
		VQFN (RGZ)	5.5	
		LQFP (PT)	28.3	
		BGA (ZQE)	19.3	

(1) N/A = not applicable
(2) The junction-to-ambient thermal resistance under natural convection is obtained in a simulation on a JEDEC-standard, High-K board, as specified in JESD51-7, in an environment described in JESD51-2a.
(3) The junction-to-case(top) thermal resistance is obtained by simulating a cold plate test on the package top. No specific JEDEC-standard test exists, but a close description can be found in the ANSI SEMI standard G30-88.
(4) The junction-to-case(bottom) thermal resistance is obtained by simulating a cold plate test on the exposed (power) pad. No specific JEDEC standard test exists, but a close description can be found in the ANSI SEMI standard G30-88.
(5) The junction-to-board thermal resistance is obtained by simulating in an environment with a ring cold plate fixture to control the PCB temperature, as described in JESD51-8.

5.7 Schmitt-Trigger Inputs – General-Purpose I/O(1) (P1.0 to P1.7, P2.0 to P2.7, P3.0 to P3.4, P4.0 to P4.7) (P5.0 to P5.5, P6.0 to P6.7, PJ.0 to PJ.3, $\overline{RST}$/NMI)

over recommended ranges of supply voltage and operating free-air temperature (unless otherwise noted)

PARAMETER		TEST CONDITIONS	V_{CC}	MIN	TYP	MAX	UNIT
V_{IT+}	Positive-going input threshold voltage		1.8 V	0.80		1.40	V
			3 V	1.50		2.10	
V_{IT-}	Negative-going input threshold voltage		1.8 V	0.45		1.00	V
			3 V	0.75		1.65	
V_{hys}	Input voltage hysteresis ($V_{IT+} – V_{IT-}$)		1.8 V	0.3		0.85	V
			3 V	0.4		1.0	
R_{Pull}	Pullup or pulldown resistor(2)	For pullup: $V_{IN} = V_{SS}$ For pulldown: $V_{IN} = V_{CC}$		20	35	50	kΩ
C_I	Input capacitance	$V_{IN} = V_{SS}$ or V_{CC}			5		pF

(1) The same parametrics apply to the clock input pin when the crystal bypass mode is used on XT1 (XIN) or XT2 (XT2IN).
(2) Also applies to the $\overline{RST}$ pin when its pullup or pulldown resistor is enabled.

5.8 Inputs – Ports P1 and P2(1) (P1.0 to P1.7, P2.0 to P2.7)

over recommended ranges of supply voltage and operating free-air temperature (unless otherwise noted)

PARAMETER		TEST CONDITIONS	V_{CC}	MIN	MAX	UNIT
$t_{(int)}$	External interrupt timing (2)	Port P1, P2: P1.x to P2.x, External trigger pulse duration to set interrupt flag	2.2 V, 3 V	20		ns

(1) Some devices may contain additional ports with interrupts. See the block diagram and terminal function descriptions.
(2) An external signal sets the interrupt flag every time the minimum interrupt pulse duration $t_{(int)}$ is met. It may be set by trigger signals shorter than $t_{(int)}$.

5.9 Leakage Current – General-Purpose I/O (P1.0 to P1.7, P2.0 to P2.7, P3.0 to P3.4, P4.0 to P4.7) (P5.0 to P5.5, P6.0 to P6.7, PJ.0 to PJ.3, RST/NMI)

over recommended ranges of supply voltage and operating free-air temperature (unless otherwise noted)

PARAMETER		TEST CONDITIONS	V_{CC}	MIN	MAX	UNIT
$I_{lkg(Px.y)}$	High-impedance leakage current	(1) (2)	1.8 V, 3 V		±50	nA

(1) The leakage current is measured with V_{SS} or V_{CC} applied to the corresponding pin(s), unless otherwise noted.
(2) The leakage of the digital port pins is measured individually. The port pin is selected for input and the pullup or pulldown resistor is disabled.

5.10 Outputs – General-Purpose I/O (Full Drive Strength) (P1.0 to P1.7, P2.0 to P2.7, P3.0 to P3.4, P4.0 to P4.7, P5.0 to P5.5, P6.0 to P6.7, PJ.0 to PJ.3)

over recommended ranges of supply voltage and operating free-air temperature (unless otherwise noted)

PARAMETER		TEST CONDITIONS	V_{CC}	MIN	MAX	UNIT
V_{OH}	High-level output voltage	$I_{(OHmax)}$ = –3 mA (1)	1.8 V	V_{CC} – 0.25	V_{CC}	V
		$I_{(OHmax)}$ = –10 mA (2)		V_{CC} – 0.60	V_{CC}	
		$I_{(OHmax)}$ = –5 mA (1)	3 V	V_{CC} – 0.25	V_{CC}	
		$I_{(OHmax)}$ = –15 mA (2)		V_{CC} – 0.60	V_{CC}	
OL	Low-level output voltage	$I_{(OLmax)}$ = 3 mA (1)	1.8 V	V_{SS}	V_{SS} + 0.25	V
		$I_{(OLmax)}$ = 10 mA (2)		V_{SS}	V_{SS} + 0.60	
		$I_{(OLmax)}$ = 5 mA (1)	3 V	V_{SS}	V_{SS} + 0.25	
		$I_{(OLmax)}$ = 15 mA (2)		V_{SS}	V_{SS} + 0.60	

(1) The maximum total current, $I_{(OHmax)}$ and $I_{(OLmax)}$, for all outputs combined should not exceed ±48 mA to hold the maximum voltage drop specified.
(2) The maximum total current, $I_{(OHmax)}$ and $I_{(OLmax)}$, for all outputs combined should not exceed ±100 mA to hold the maximum voltage drop specified.

Copyright © 2010–2020, Texas Instruments Incorporated

5.11 Outputs – General-Purpose I/O (Reduced Drive Strength) (P1.0 to P1.7, P2.0 to P2.7, P3.0 to P3.4, P4.0 to P4.7, P5.0 to P5.5, P6.0 to P6.7, PJ.0 to PJ.3)

over recommended ranges of supply voltage and operating free-air temperature (unless otherwise noted) (1)

PARAMETER		TEST CONDITIONS	V_{CC}	MIN	MAX	UNIT
V_{OH}	High-level output voltage	$I_{(OHmax)}$ = –1 mA (2)	1.8 V	V_{CC} – 0.25	V_{CC}	V
		$I_{(OHmax)}$ = –3 mA (3)		V_{CC} – 0.60	V_{CC}	
		$I_{(OHmax)}$ = –2 mA (2)	3 V	V_{CC} – 0.25	V_{CC}	
		$I_{(OHmax)}$ = –6 mA (3)		V_{CC} – 0.60	V_{CC}	
V_{OL}	Low-level output voltage	$I_{(OLmax)}$ = 1 mA (2)	1.8 V	V_{SS}	V_{SS} + 0.25	V
		$I_{(OLmax)}$ = 3 mA (3)		V_{SS}	V_{SS} + 0.60	
		$I_{(OLmax)}$ = 2 mA (2)	3 V	V_{SS}	V_{SS} + 0.25	
		$I_{(OLmax)}$ = 6 mA (3)		V_{SS}	V_{SS} + 0.60	

(1) Selecting reduced drive strength may reduce EMI.
(2) The maximum total current, $I_{(OHmax)}$ and $I_{(OLmax)}$, for all outputs combined, should not exceed ±48 mA to hold the maximum voltage drop specified.
(3) The maximum total current, $I_{(OHmax)}$ and $I_{(OLmax)}$, for all outputs combined, should not exceed ±100 mA to hold the maximum voltage drop specified.

5.12 Output Frequency – General-Purpose I/O (P1.0 to P1.7, P2.0 to P2.7, P3.0 to P3.4, P4.0 to P4.7, P5.0 to P5.5, P6.0 to P6.7, PJ.0 to PJ.3)

over recommended ranges of supply voltage and operating free-air temperature (unless otherwise noted)

PARAMETER		TEST CONDITIONS		MIN	MAX	UNIT
$f_{Px.y}$	Port output frequency (with load)	See (1) (2)	V_{CC} = 1.8 V PMMCOREVx = 0		16	MHz
			V_{CC} = 3 V PMMCOREVx = 3		25	
f_{Port_CLK}	Clock output frequency	ACLK, SMCLK, MCLK, C_L = 20 pF (2)	V_{CC} = 1.8 V PMMCOREVx = 0		16	MHz
			V_{CC} = 3 V PMMCOREVx = 3		25	

(1) A resistive divider with 2 × R1 between V_{CC} and V_{SS} is used as load. The output is connected to the center tap of the divider. For full drive strength, R1 = 550 Ω. For reduced drive strength, R1 = 1.6 kΩ. C_L = 20 pF is connected to the output to V_{SS}.
(2) The output voltage reaches at least 10% and 90% V_{CC} at the specified toggle frequency.

5.13 Typical Characteristics – Outputs, Reduced Drive Strength (PxDS.y = 0)

over recommended ranges of supply voltage and operating free-air temperature (unless otherwise noted)

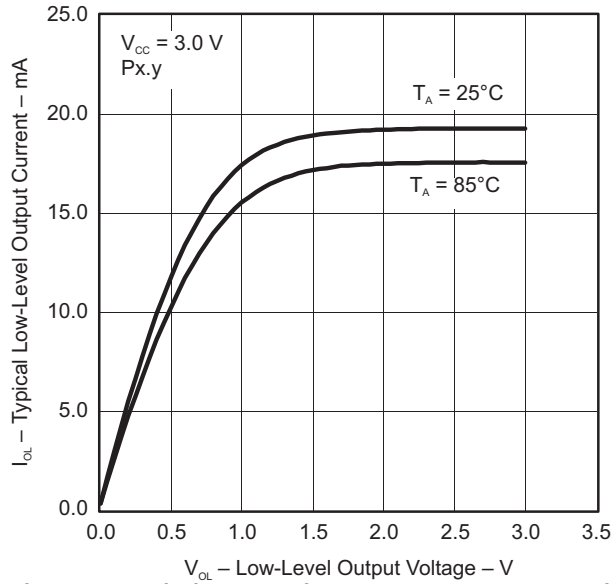

Figure 5-2. Typical Low-Level Output Current vs Low-Level Output Voltage

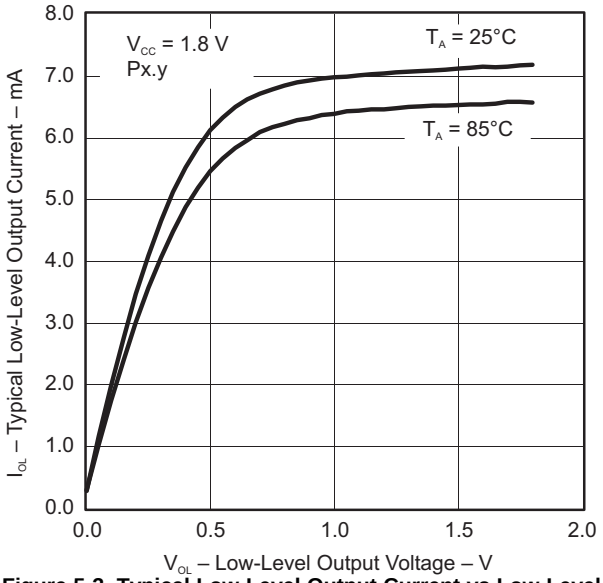

Figure 5-3. Typical Low-Level Output Current vs Low-Level Output Voltage

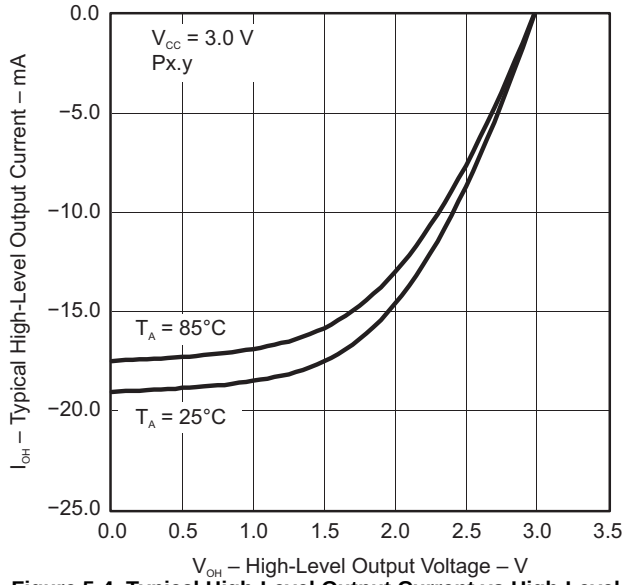

Figure 5-4. Typical High-Level Output Current vs High-Level Output Voltage

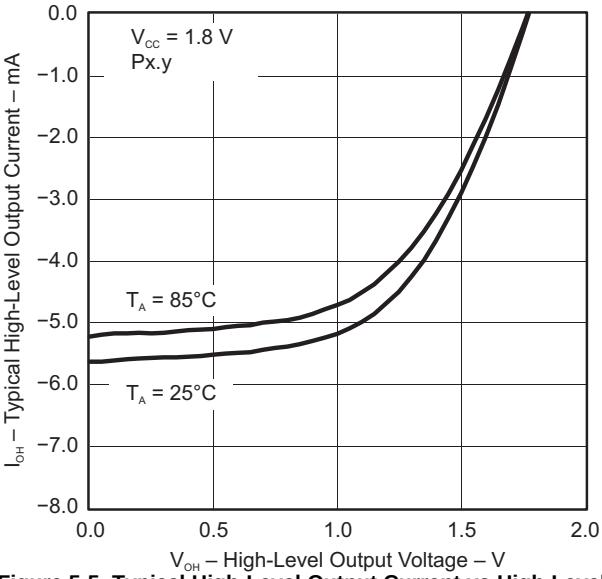

Figure 5-5. Typical High-Level Output Current vs High-Level Output Voltage

Copyright © 2010–2020, Texas Instruments Incorporated

5.14 Crystal Oscillator, XT1, Low-Frequency Mode[1]

over recommended ranges of supply voltage and operating free-air temperature (unless otherwise noted)

PARAMETER		TEST CONDITIONS	V_{CC}	MIN	TYP	MAX	UNIT
$\Delta I_{DVCC.LF}$	Differential XT1 oscillator crystal current consumption from lowest drive setting, LF mode	f_{OSC} = 32768 Hz, XTS = 0, XT1BYPASS = 0, XT1DRIVEx = 1, T_A = 25°C	3 V		0.075		µA
		f_{OSC} = 32768 Hz, XTS = 0, XT1BYPASS = 0, XT1DRIVEx = 2, T_A = 25°C			0.170		
		f_{OSC} = 32768 Hz, XTS = 0, XT1BYPASS = 0, XT1DRIVEx = 3, T_A = 25°C			0.290		
$f_{XT1,LF0}$	XT1 oscillator crystal frequency, LF mode	XTS = 0, XT1BYPASS = 0			32768		Hz
$f_{XT1,LF,SW}$	XT1 oscillator logic-level square-wave input frequency, LF mode	XTS = 0, XT1BYPASS = 1 [2] [3]		10	32.768	50	kHz
OA_{LF}	Oscillation allowance for LF crystals [4]	XTS = 0, XT1BYPASS = 0, XT1DRIVEx = 0, $f_{XT1,LF}$ = 32768 Hz, $C_{L,eff}$ = 6 pF			210		kΩ
		XTS = 0, XT1BYPASS = 0, XT1DRIVEx = 1, $f_{XT1,LF}$ = 32768 Hz, $C_{L,eff}$ = 12 pF			300		
$C_{L,eff}$	Integrated effective load capacitance, LF mode [5]	XTS = 0, XCAPx = 0[6]			1		pF
		XTS = 0, XCAPx = 1			5.5		
		XTS = 0, XCAPx = 2			8.5		
		XTS = 0, XCAPx = 3			12.0		
	Duty cycle, LF mode	XTS = 0, Measured at ACLK, $f_{XT1,LF}$ = 32768 Hz		30%		70%	
$f_{Fault,LF}$	Oscillator fault frequency, LF mode [7]	XTS = 0 [8]		10		10000	Hz
$t_{START,LF}$	Start-up time, LF mode	f_{OSC} = 32768 Hz, XTS = 0, XT1BYPASS = 0, XT1DRIVEx = 0, T_A = 25°C, $C_{L,eff}$ = 6 pF	3 V		1000		ms
		f_{OSC} = 32768 Hz, XTS = 0, XT1BYPASS = 0, XT1DRIVEx = 3, T_A = 25°C, $C_{L,eff}$ = 12 pF			500		

(1) To improve EMI on the XT1 oscillator, the following guidelines should be observed.
- Keep the trace between the device and the crystal as short as possible.
- Design a good ground plane around the oscillator pins.
- Prevent crosstalk from other clock or data lines into oscillator pins XIN and XOUT.
- Avoid running PCB traces underneath or adjacent to the XIN and XOUT pins.
- Use assembly materials and processes that avoid any parasitic load on the oscillator XIN and XOUT pins.
- If conformal coating is used, make sure that it does not induce capacitive or resistive leakage between the oscillator pins.

(2) When XT1BYPASS is set, XT1 circuits are automatically powered down. Input signal is a digital square wave with parametrics defined in the Schmitt-trigger Inputs section of this data sheet.

(3) Maximum frequency of operation of the entire device cannot be exceeded.

(4) Oscillation allowance is based on a safety factor of 5 for recommended crystals. The oscillation allowance is a function of the XT1DRIVEx settings and the effective load. In general, comparable oscillator allowance can be achieved based on the following guidelines, but should be evaluated based on the actual crystal selected for the application:
- For XT1DRIVEx = 0, $C_{L,eff} \le 6$ pF.
- For XT1DRIVEx = 1, 6 pF $\le C_{L,eff} \le$ 9 pF.
- For XT1DRIVEx = 2, 6 pF $\le C_{L,eff} \le$ 10 pF.
- For XT1DRIVEx = 3, $C_{L,eff} \ge 6$ pF.

(5) Includes parasitic bond and package capacitance (approximately 2 pF per pin).
Because the PCB adds additional capacitance, verify the correct load by measuring the ACLK frequency. For a correct setup, the effective load capacitance should always match the specification of the used crystal.

(6) Requires external capacitors at both terminals. Values are specified by crystal manufacturers.

(7) Frequencies below the MIN specification set the fault flag. Frequencies above the MAX specification do not set the fault flag. Frequencies between the MIN and MAX specifications might set the flag.

(8) Measured with logic-level input frequency but also applies to operation with crystals.

5.15 Crystal Oscillator, XT2

over recommended ranges of supply voltage and operating free-air temperature (unless otherwise noted) (1) (2)

PARAMETER		TEST CONDITIONS	V_{CC}	MIN	TYP	MAX	UNIT
$I_{DVCC.XT2}$	XT2 oscillator crystal current consumption	f_{OSC} = 4 MHz, XT2OFF = 0, XT2BYPASS = 0, XT2DRIVEx = 0, T_A = 25°C	3 V		200		µA
		f_{OSC} = 12 MHz, XT2OFF = 0, XT2BYPASS = 0, XT2DRIVEx = 1, T_A = 25°C			260		
		f_{OSC} = 20 MHz, XT2OFF = 0, XT2BYPASS = 0, XT2DRIVEx = 2, T_A = 25°C			325		
		f_{OSC} = 32 MHz, XT2OFF = 0, XT2BYPASS = 0, XT2DRIVEx = 3, T_A = 25°C			450		
$f_{XT2,HF0}$	XT2 oscillator crystal frequency, mode 0	XT2DRIVEx = 0, XT2BYPASS = 0 (3)		4		8	MHz
$f_{XT2,HF1}$	XT2 oscillator crystal frequency, mode 1	XT2DRIVEx = 1, XT2BYPASS = 0 (3)		8		16	MHz
$f_{XT2,HF2}$	XT2 oscillator crystal frequency, mode 2	XT2DRIVEx = 2, XT2BYPASS = 0 (3)		16		24	MHz
$f_{XT2,HF3}$	XT2 oscillator crystal frequency, mode 3	XT2DRIVEx = 3, XT2BYPASS = 0 (3)		24		32	MHz
$f_{XT2,HF,SW}$	XT2 oscillator logic-level square-wave input frequency, bypass mode	XT2BYPASS = 1 (4) (3)		0.7		32	MHz
OA_{HF}	Oscillation allowance for HF crystals (5)	XT2DRIVEx = 0, XT2BYPASS = 0, $f_{XT2,HF0}$ = 6 MHz, $C_{L,eff}$ = 15 pF			450		Ω
		XT2DRIVEx = 1, XT2BYPASS = 0, $f_{XT2,HF1}$ = 12 MHz, $C_{L,eff}$ = 15 pF			320		
		XT2DRIVEx = 2, XT2BYPASS = 0, $f_{XT2,HF2}$ = 20 MHz, $C_{L,eff}$ = 15 pF			200		
		XT2DRIVEx = 3, XT2BYPASS = 0, $f_{XT2,HF3}$ = 32 MHz, $C_{L,eff}$ = 15 pF			200		
$t_{START,HF}$	Start-up time	f_{OSC} = 6 MHz, XT2BYPASS = 0, XT2DRIVEx = 0, T_A = 25°C, $C_{L,eff}$ = 15 pF	3 V		0.5		ms
		f_{OSC} = 20 MHz XT2BYPASS = 0, XT2DRIVEx = 2, T_A = 25°C, $C_{L,eff}$ = 15 pF			0.3		
$C_{L,eff}$	Integrated effective load capacitance, HF mode (6) (1)				1		pF
	Duty cycle	Measured at ACLK, $f_{XT2,HF2}$ = 20 MHz		40%	50%	60%	
$f_{Fault,HF}$	Oscillator fault frequency (7)	XT2BYPASS = 1 (8)		30		300	kHz

(1) Requires external capacitors at both terminals. Values are specified by crystal manufacturers.
(2) To improve EMI on the XT2 oscillator the following guidelines should be observed.
- Keep the traces between the device and the crystal as short as possible.
- Design a good ground plane around the oscillator pins.
- Prevent crosstalk from other clock or data lines into oscillator pins XT2IN and XT2OUT.
- Avoid running PCB traces underneath or adjacent to the XT2IN and XT2OUT pins.
- Use assembly materials and processes that avoid any parasitic load on the oscillator XT2IN and XT2OUT pins.
- If conformal coating is used, make sure that it does not induce capacitive or resistive leakage between the oscillator pins.

(3) This represents the maximum frequency that can be input to the device externally. Maximum frequency achievable on the device operation is based on the frequencies present on ACLK, MCLK, and SMCLK cannot be exceed for a given range of operation.
(4) When XT2BYPASS is set, the XT2 circuit is automatically powered down. Input signal is a digital square wave with parametrics defined in the Schmitt-Trigger Inputs section of this data sheet.
(5) Oscillation allowance is based on a safety factor of 5 for recommended crystals.
(6) Includes parasitic bond and package capacitance (approximately 2 pF per pin).
Because the PCB adds additional capacitance, verify the correct load by measuring the ACLK frequency. For a correct setup, the effective load capacitance should always match the specification of the used crystal.
(7) Frequencies below the MIN specification set the fault flag. Frequencies above the MAX specification do not set the fault flag. Frequencies between the MIN and MAX specifications might set the flag.
(8) Measured with logic-level input frequency but also applies to operation with crystals.

Copyright © 2010–2020, Texas Instruments Incorporated

5.16 Internal Very-Low-Power Low-Frequency Oscillator (VLO)

over recommended ranges of supply voltage and operating free-air temperature (unless otherwise noted)

PARAMETER		TEST CONDITIONS	V_{CC}	MIN	TYP	MAX	UNIT
f_{VLO}	VLO frequency	Measured at ACLK	1.8 V to 3.6 V	6	9.4	14	kHz
df_{VLO}/d_T	VLO frequency temperature drift	Measured at ACLK (1)	1.8 V to 3.6 V		0.5		%/°C
df_{VLO}/dV_{CC}	VLO frequency supply voltage drift	Measured at ACLK (2)	1.8 V to 3.6 V		4		%/V
	Duty cycle	Measured at ACLK	1.8 V to 3.6 V	40%	50%	60%	

(1) Calculated using the box method: (MAX(–40°C to 85°C) – MIN(–40°C to 85°C)) / MIN(–40°C to 85°C) / (85°C – (–40°C))
(2) Calculated using the box method: (MAX(1.8 V to 3.6 V) – MIN(1.8 V to 3.6 V)) / MIN(1.8 V to 3.6 V) / (3.6 V – 1.8 V)

5.17 Internal Reference, Low-Frequency Oscillator (REFO)

over recommended ranges of supply voltage and operating free-air temperature (unless otherwise noted)

PARAMETER		TEST CONDITIONS	V_{CC}	MIN	TYP	MAX	UNIT
I_{REFO}	REFO oscillator current consumption	T_A = 25°C	1.8 V to 3.6 V		3		µA
f_{REFO}	REFO frequency calibrated	Measured at ACLK	1.8 V to 3.6 V		32768		Hz
	REFO absolute tolerance calibrated	Full temperature range	1.8 V to 3.6 V			±3.5%	
		T_A = 25°C	3 V			±1.5%	
df_{REFO}/d_T	REFO frequency temperature drift	Measured at ACLK (1)	1.8 V to 3.6 V		0.01		%/°C
df_{REFO}/dV_{CC}	REFO frequency supply voltage drift	Measured at ACLK (2)	1.8 V to 3.6 V		1.0		%/V
	Duty cycle	Measured at ACLK	1.8 V to 3.6 V	40%	50%	60%	
t_{START}	REFO startup time	40%/60% duty cycle	1.8 V to 3.6 V		25		µs

(1) Calculated using the box method: (MAX(–40°C to 85°C) – MIN(–40°C to 85°C)) / MIN(–40°C to 85°C) / (85°C – (–40°C))
(2) Calculated using the box method: (MAX(1.8 V to 3.6 V) – MIN(1.8 V to 3.6 V)) / MIN(1.8 V to 3.6 V) / (3.6 V – 1.8 V)

Copyright © 2010–2020, Texas Instruments Incorporated

5.18 DCO Frequency

over recommended ranges of supply voltage and operating free-air temperature (unless otherwise noted)

PARAMETER		TEST CONDITIONS	MIN	TYP	MAX	UNIT
$f_{DCO(0,0)}$	DCO frequency (0, 0)(1)	DCORSELx = 0, DCOx = 0, MODx = 0	0.07		0.20	MHz
$f_{DCO(0,31)}$	DCO frequency (0, 31)(1)	DCORSELx = 0, DCOx = 31, MODx = 0	0.70		1.70	MHz
$f_{DCO(1,0)}$	DCO frequency (1, 0)(1)	DCORSELx = 1, DCOx = 0, MODx = 0	0.15		0.36	MHz
$f_{DCO(1,31)}$	DCO frequency (1, 31)(1)	DCORSELx = 1, DCOx = 31, MODx = 0	1.47		3.45	MHz
$f_{DCO(2,0)}$	DCO frequency (2, 0)(1)	DCORSELx = 2, DCOx = 0, MODx = 0	0.32		0.75	MHz
$f_{DCO(2,31)}$	DCO frequency (2, 31)(1)	DCORSELx = 2, DCOx = 31, MODx = 0	3.17		7.38	MHz
$f_{DCO(3,0)}$	DCO frequency (3, 0)(1)	DCORSELx = 3, DCOx = 0, MODx = 0	0.64		1.51	MHz
$f_{DCO(3,31)}$	DCO frequency (3, 31)(1)	DCORSELx = 3, DCOx = 31, MODx = 0	6.07		14.0	MHz
$f_{DCO(4,0)}$	DCO frequency (4, 0)(1)	DCORSELx = 4, DCOx = 0, MODx = 0	1.3		3.2	MHz
$f_{DCO(4,31)}$	DCO frequency (4, 31)(1)	DCORSELx = 4, DCOx = 31, MODx = 0	12.3		28.2	MHz
$f_{DCO(5,0)}$	DCO frequency (5, 0)(1)	DCORSELx = 5, DCOx = 0, MODx = 0	2.5		6.0	MHz
$f_{DCO(5,31)}$	DCO frequency (5, 31)(1)	DCORSELx = 5, DCOx = 31, MODx = 0	23.7		54.1	MHz
$f_{DCO(6,0)}$	DCO frequency (6, 0)(1)	DCORSELx = 6, DCOx = 0, MODx = 0	4.6		10.7	MHz
$f_{DCO(6,31)}$	DCO frequency (6, 31)(1)	DCORSELx = 6, DCOx = 31, MODx = 0	39.0		88.0	MHz
$f_{DCO(7,0)}$	DCO frequency (7, 0)(1)	DCORSELx = 7, DCOx = 0, MODx = 0	8.5		19.6	MHz
$f_{DCO(7,31)}$	DCO frequency (7, 31)(1)	DCORSELx = 7, DCOx = 31, MODx = 0	60		135	MHz
$S_{DCORSEL}$	Frequency step between range DCORSEL and DCORSEL + 1	$S_{RSEL} = f_{DCO(DCORSEL+1,DCO)}/f_{DCO(DCORSEL,DCO)}$	1.2		2.3	ratio
S_{DCO}	Frequency step between tap DCO and DCO + 1	$S_{DCO} = f_{DCO(DCORSEL,DCO+1)}/f_{DCO(DCORSEL,DCO)}$	1.02		1.12	ratio
	Duty cycle	Measured at SMCLK	40%	50%	60%	
df_{DCO}/dT	DCO frequency temperature drift(2)	f_{DCO} = 1 MHz,		0.1		%/°C
df_{DCO}/dV_{CC}	DCO frequency voltage drift(3)	f_{DCO} = 1 MHz		1.9		%/V

(1) When selecting the proper DCO frequency range (DCORSELx), the target DCO frequency, f_{DCO}, should be set to reside within the range of $f_{DCO(n,\ 0),MAX} \le f_{DCO} \le f_{DCO(n,\ 31),MIN}$, where $f_{DCO(n,\ 0),MAX}$ represents the maximum frequency specified for the DCO frequency, range n, tap 0 (DCOx = 0) and $f_{DCO(n,31),MIN}$ represents the minimum frequency specified for the DCO frequency, range n, tap 31 (DCOx = 31). This ensures that the target DCO frequency resides within the range selected. It should also be noted that if the actual f_{DCO} frequency for the selected range causes the FLL or the application to select tap 0 or 31, the DCO fault flag is set to report that the selected range is at its minimum or maximum tap setting.
(2) Calculated using the box method: (MAX(–40°C to 85°C) – MIN(–40°C to 85°C)) / MIN(–40°C to 85°C) / (85°C – (–40°C))
(3) Calculated using the box method: (MAX(1.8 V to 3.6 V) – MIN(1.8 V to 3.6 V)) / MIN(1.8 V to 3.6 V) / (3.6 V – 1.8 V)

Figure 5-6. Typical DCO Frequency

Copyright © 2010–2020, Texas Instruments Incorporated

5.19 PMM, Brownout Reset (BOR)

over recommended ranges of supply voltage and operating free-air temperature (unless otherwise noted)

PARAMETER		TEST CONDITIONS	MIN	TYP	MAX	UNIT
$V_{(DVCC_BOR_IT-)}$	BOR_H on voltage, DV_{CC} falling level	$\lvert dDV_{CC}/d_t \rvert < 3$ V/s			1.45	V
$V_{(DVCC_BOR_IT+)}$	BOR_H off voltage, DV_{CC} rising level	$\lvert dDV_{CC}/d_t \rvert < 3$ V/s	0.80	1.30	1.50	V
$V_{(DVCC_BOR_hys)}$	BOR_H hysteresis		50		250	mV
t_{RESET}	Pulse duration required at $\overline{RST}$/NMI pin to accept a reset		2			µs

5.20 PMM, Core Voltage

over recommended ranges of supply voltage and operating free-air temperature (unless otherwise noted)

PARAMETER		TEST CONDITIONS	MIN	TYP	MAX	UNIT
V_{CORE3}(AM)	Core voltage, active mode, PMMCOREV = 3	2.4 V ≤ DV_{CC} ≤ 3.6 V		1.90		V
V_{CORE2}(AM)	Core voltage, active mode, PMMCOREV = 2	2.2 V ≤ DV_{CC} ≤ 3.6 V		1.80		V
V_{CORE1}(AM)	Core voltage, active mode, PMMCOREV = 1	2.0 V ≤ DV_{CC} ≤ 3.6 V		1.60		V
V_{CORE0}(AM)	Core voltage, active mode, PMMCOREV = 0	1.8 V ≤ DV_{CC} ≤ 3.6 V		1.40		V
V_{CORE3}(LPM)	Core voltage, low-current mode, PMMCOREV = 3	2.4 V ≤ DV_{CC} ≤ 3.6 V		1.94		V
V_{CORE2}(LPM)	Core voltage, low-current mode, PMMCOREV = 2	2.2 V ≤ DV_{CC} ≤ 3.6 V		1.84		V
V_{CORE1}(LPM)	Core voltage, low-current mode, PMMCOREV = 1	2.0 V ≤ DV_{CC} ≤ 3.6 V		1.64		V
V_{CORE0}(LPM)	Core voltage, low-current mode, PMMCOREV = 0	1.8 V ≤ DV_{CC} ≤ 3.6 V		1.44		V

5.21 PMM, SVS High Side

over recommended ranges of supply voltage and operating free-air temperature (unless otherwise noted)

PARAMETER		TEST CONDITIONS	MIN	TYP	MAX	UNIT
$I_{(SVSH)}$	SVS current consumption	SVSHE = 0, DV_{CC} = 3.6 V		0		nA
		SVSHE = 1, DV_{CC} = 3.6 V, SVSHFP = 0		200		
		SVSHE = 1, DV_{CC} = 3.6 V, SVSHFP = 1		1.5		µA
$V_{(SVSH_IT-)}$	SVS_H on voltage level(1)	SVSHE = 1, SVSHRVL = 0	1.57	1.68	1.78	V
		SVSHE = 1, SVSHRVL = 1	1.79	1.88	1.98	
		SVSHE = 1, SVSHRVL = 2	1.98	2.08	2.21	
		SVSHE = 1, SVSHRVL = 3	2.10	2.18	2.31	
$V_{(SVSH_IT+)}$	SVS_H off voltage level(1)	SVSHE = 1, SVSMHRRL = 0	1.62	1.74	1.85	V
		SVSHE = 1, SVSMHRRL = 1	1.88	1.94	2.07	
		SVSHE = 1, SVSMHRRL = 2	2.07	2.14	2.28	
		SVSHE = 1, SVSMHRRL = 3	2.20	2.30	2.42	
		SVSHE = 1, SVSMHRRL = 4	2.32	2.40	2.55	
		SVSHE = 1, SVSMHRRL = 5	2.52	2.70	2.88	
		SVSHE = 1, SVSMHRRL = 6	2.90	3.10	3.23	
		SVSHE = 1, SVSMHRRL = 7	2.90	3.10	3.23	
$t_{pd(SVSH)}$	SVS_H propagation delay	SVSHE = 1, dV_{DVCC}/dt = 10 mV/µs, SVSHFP = 1		2.5		µs
		SVSHE = 1, dV_{DVCC}/dt = 1 mV/µs, SVSHFP = 0		20		
$t_{(SVSH)}$	SVS_H on or off delay time	SVSHE = 0 → 1, SVSHFP = 1		12.5		µs
		SVSHE = 0 → 1, SVSHFP = 0		100		
dV_{DVCC}/dt	DV_{CC} rise time		0		1000	V/s

(1) The SVS_H settings that are available depend on the VCORE (PMMCOREVx) setting. See the *Power-Management Module and Supply Voltage Supervisor* chapter in the *MSP430F5xx and MSP430F6xx Family User's Guide* for recommended settings and use.

5.22 PMM, SVM High Side

over recommended ranges of supply voltage and operating free-air temperature (unless otherwise noted)

PARAMETER		TEST CONDITIONS	MIN	TYP	MAX	UNIT
$I_{(SVMH)}$	SVM_H current consumption	SVMHE = 0, DV_{CC} = 3.6 V		0		nA
		SVMHE= 1, DV_{CC} = 3.6 V, SVMHFP = 0		200		
		SVMHE = 1, DV_{CC} = 3.6 V, SVMHFP = 1		1.5		µA
$V_{(SVMH)}$	SVM_H on or off voltage level (1)	SVMHE = 1, SVSMHRRL = 0	1.62	1.74	1.85	V
		SVMHE = 1, SVSMHRRL = 1	1.88	1.94	2.07	
		SVMHE = 1, SVSMHRRL = 2	2.07	2.14	2.28	
		SVMHE = 1, SVSMHRRL = 3	2.20	2.30	2.42	
		SVMHE = 1, SVSMHRRL = 4	2.32	2.40	2.55	
		SVMHE = 1, SVSMHRRL = 5	2.52	2.70	2.88	
		SVMHE = 1, SVSMHRRL = 6	2.90	3.10	3.23	
		SVMHE = 1, SVSMHRRL = 7	2.90	3.10	3.23	
		SVMHE = 1, SVMHOVPE = 1		3.75		
$t_{pd(SVMH)}$	SVM_H propagation delay	SVMHE = 1, dV_{DVCC}/dt = 10 mV/µs, SVMHFP = 1		2.5		µs
		SVMHE = 1, dV_{DVCC}/dt = 1 mV/µs, SVMHFP = 0		20		
$t_{(SVMH)}$	SVM_H on or off delay time	SVMHE = 0 → 1, SVMHFP = 1		12.5		µs
		SVMHE = 0 → 1, SVMHFP = 0		100		

(1) The SVM_H settings available depend on the VCORE (PMMCOREVx) setting. See the *Power-Management Module and Supply Voltage Supervisor* chapter in the *MSP430F5xx and MSP430F6xx Family User's Guide* on recommended settings and use.

5.23 PMM, SVS Low Side

over recommended ranges of supply voltage and operating free-air temperature (unless otherwise noted)

PARAMETER		TEST CONDITIONS	MIN	TYP	MAX	UNIT
$I_{(SVSL)}$	SVS_L current consumption	SVSLE = 0, PMMCOREV = 2		0		nA
		SVSLE = 1, PMMCOREV = 2, SVSLFP = 0		200		
		SVSLE = 1, PMMCOREV = 2, SVSLFP = 1		2.0		µA
$t_{pd(SVSL)}$	SVS_L propagation delay	SVSLE = 1, dV_{CORE}/dt = 10 mV/µs, SVSLFP = 1		2.5		µs
		SVSLE = 1, dV_{CORE}/dt = 1 mV/µs, SVSLFP = 0		20		
$t_{(SVSL)}$	SVS_L on or off delay time	SVSLE = 0 → 1, SVSLFP = 1		12.5		µs
		SVSLE = 0 → 1, SVSLFP = 0		100		

5.24 PMM, SVM Low Side

over recommended ranges of supply voltage and operating free-air temperature (unless otherwise noted)

PARAMETER		TEST CONDITIONS	MIN	TYP	MAX	UNIT
$I_{(SVML)}$	SVM_L current consumption	SVMLE = 0, PMMCOREV = 2		0		nA
		SVMLE= 1, PMMCOREV = 2, SVMLFP = 0		200		
		SVMLE= 1, PMMCOREV = 2, SVMLFP = 1		1.5		µA
$t_{pd(SVML)}$	SVM_L propagation delay	SVMLE = 1, dV_{CORE}/dt = 10 mV/µs, SVMLFP = 1		2.5		µs
		SVMLE = 1, dV_{CORE}/dt = 1 mV/µs, SVMLFP = 0		20		
$t_{(SVML)}$	SVM_L on or off delay time	SVMLE = 0 → 1, SVMLFP = 1		12.5		µs
		SVMLE = 0 → 1, SVMLFP = 0		100		

Copyright © 2010–2020, Texas Instruments Incorporated

5.25 Wake-up Times From Low-Power Modes and Reset

over recommended ranges of supply voltage and operating free-air temperature (unless otherwise noted)

PARAMETER		TEST CONDITIONS		MIN	TYP	MAX	UNIT
$t_{WAKE-UP-FAST}$	Wake-up time from LPM2, LPM3, or LPM4 to active mode (1)	PMMCOREV = SVSMLRRL = n (where n = 0, 1, 2, or 3), SVSLFP = 1	$f_{MCLK} \geq 4.0$ MHz			5	µs
			$f_{MCLK} < 4.0$ MHz			6	
$t_{WAKE-UP-SLOW}$	Wake-up time from LPM2, LPM3, or LPM4 to active mode (2) (3)	PMMCOREV = SVSMLRRL = n (where n = 0, 1, 2, or 3), SVSLFP = 0			150	165	µs
$t_{WAKE-UP-LPM5}$	Wake-up time from LPM4.5 to active mode (4)				2	3	ms
$t_{WAKE-UP-RESET}$	Wake-up time from $\overline{RST}$ or BOR event to active mode (4)				2	3	ms

(1) This value represents the time from the wake-up event to the first active edge of MCLK. The wake-up time depends on the performance mode of the low-side supervisor (SVS_L) and low-side monitor (SVM_L). $t_{WAKE-UP-FAST}$ is possible with SVS_L and SVM_L in full performance mode or disabled. For specific register settings, see the *Low-Side SVS and SVM Control and Performance Mode Selection* section in the *Power Management Module and Supply Voltage Supervisor* chapter of the *MSP430F5xx and MSP430F6xx Family User's Guide*.
(2) This value represents the time from the wake-up event to the first active edge of MCLK. The wake-up time depends on the performance mode of the low-side supervisor (SVS_L) and low-side monitor (SVM_L). $t_{WAKE-UP-SLOW}$ is set with SVS_L and SVM_L in normal mode (low current mode). For specific register settings, see the *Low-Side SVS and SVM Control and Performance Mode Selection* section in the *Power Management Module and Supply Voltage Supervisor* chapter of the *MSP430F5xx and MSP430F6xx Family User's Guide*.
(3) The wake-up times from LPM0 and LPM1 to AM are not specified. They are proportional to MCLK cycle time but are not affected by the performance mode settings as for LPM2, LPM3, and LPM4.
(4) This value represents the time from the wake-up event to the reset vector execution.

5.26 Timer_A

over recommended ranges of supply voltage and operating free-air temperature (unless otherwise noted)

PARAMETER		TEST CONDITIONS	V_{CC}	MIN	MAX	UNIT
f_{TA}	Timer_A input clock frequency	Internal: SMCLK or ACLK, External: TACLK, Duty cycle = 50% ±10%	1.8 V, 3 V		25	MHz
$t_{TA,cap}$	Timer_A capture timing	All capture inputs, Minimum pulse duration required for capture	1.8 V, 3 V	20		ns

5.27 Timer_B

over recommended ranges of supply voltage and operating free-air temperature (unless otherwise noted)

PARAMETER		TEST CONDITIONS	V_{CC}	MIN	MAX	UNIT
f_{TB}	Timer_B input clock frequency	Internal: SMCLK or ACLK, External: TBCLK, Duty cycle = 50% ±10%	1.8 V, 3 V		25	MHz
$t_{TB,cap}$	Timer_B capture timing	All capture inputs, minimum pulse duration required for capture	1.8 V, 3 V	20		ns

5.28 USCI (UART Mode) Clock Frequency

PARAMETER		CONDITIONS	V_{CC}	MIN	MAX	UNIT
f_{USCI}	USCI input clock frequency	Internal: SMCLK or ACLK, External: UCLK, Duty cycle = 50% ±10%			f_{SYSTEM}	MHz
f_{BITCLK}	BITCLK clock frequency (equals baud rate in MBaud)				1	MHz

5.29 USCI (UART Mode)

over recommended ranges of supply voltage and operating free-air temperature (unless otherwise noted)

PARAMETER		V_{CC}	MIN	MAX	UNIT
t_{τ}	UART receive deglitch time (1)	2.2 V	50	600	ns
		3 V	50	600	

(1) Pulses on the UART receive input (UCxRX) shorter than the UART receive deglitch time are suppressed. To ensure that pulses are correctly recognized, their duration should exceed the maximum specification of the deglitch time.

5.30 USCI (SPI Master Mode) Clock Frequency

PARAMETER		CONDITIONS	MIN	MAX	UNIT
f_{USCI}	USCI input clock frequency	Internal: SMCLK or ACLK, Duty cycle = 50% ±10%		f_{SYSTEM}	MHz

5.31 USCI (SPI Master Mode)

over recommended ranges of supply voltage and operating free-air temperature (unless otherwise noted)(1)
(see Figure 5-7 and Figure 5-8)

PARAMETER		TEST CONDITIONS	V_{CC}	MIN	MAX	UNIT
f_{USCI}	USCI input clock frequency	SMCLK or ACLK, Duty cycle = 50% ±10%			f_{SYSTEM}	MHz
$t_{SU,MI}$	SOMI input data setup time	PMMCOREV = 0	1.8 V	55		ns
			3 V	38		
		PMMCOREV = 3	2.4 V	30		
			3 V	25		
$t_{HD,MI}$	SOMI input data hold time	PMMCOREV = 0	1.8 V	0		ns
			3 V	0		
		PMMCOREV = 3	2.4 V	0		
			3 V	0		
$t_{VALID,MO}$	SIMO output data valid time (2)	UCLK edge to SIMO valid, C_L = 20 pF, PMMCOREV = 0	1.8 V		20	ns
			3 V		18	
		UCLK edge to SIMO valid, C_L = 20 pF, PMMCOREV = 3	2.4 V		16	
			3 V		15	
$t_{HD,MO}$	SIMO output data hold time (3)	C_L = 20 pF, PMMCOREV = 0	1.8 V	–10		ns
			3 V	–8		
		C_L = 20 pF, PMMCOREV = 3	2.4 V	–10		
			3 V	–8		

(1) $f_{UCxCLK} = 1/2t_{LO/HI}$ with $t_{LO/HI} \geq \max(t_{VALID,MO(USCI)} + t_{SU,SI(Slave)}, t_{SU,MI(USCI)} + t_{VALID,SO(Slave)})$
For the slave parameters $t_{SU,SI(Slave)}$ and $t_{VALID,SO(Slave)}$, see the SPI parameters of the attached slave.
(2) Specifies the time to drive the next valid data to the SIMO output after the output changing UCLK clock edge. See the timing diagrams in Figure 5-7 and Figure 5-8.
(3) Specifies how long data on the SIMO output is valid after the output changing UCLK clock edge. Negative values indicate that the data on the SIMO output can become invalid before the output changing clock edge observed on UCLK. See the timing diagrams in Figure 5-7 and Figure 5-8.

Copyright © 2010–2020, Texas Instruments Incorporated

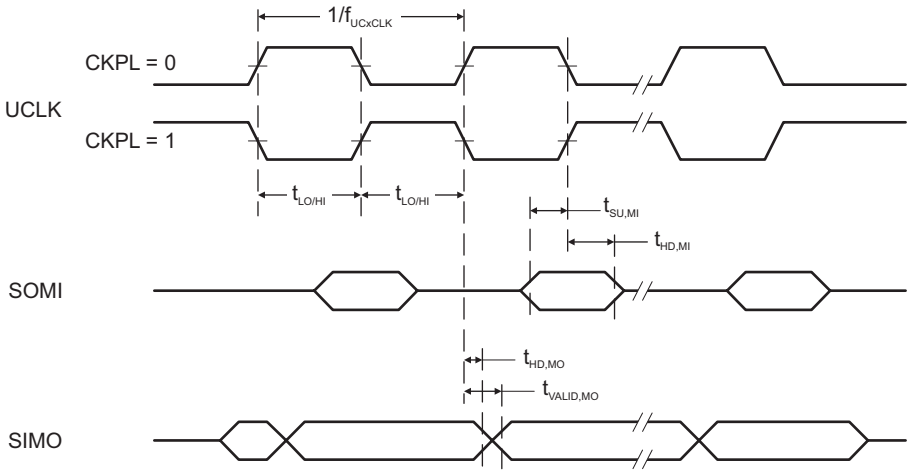

Figure 5-7. SPI Master Mode, CKPH = 0

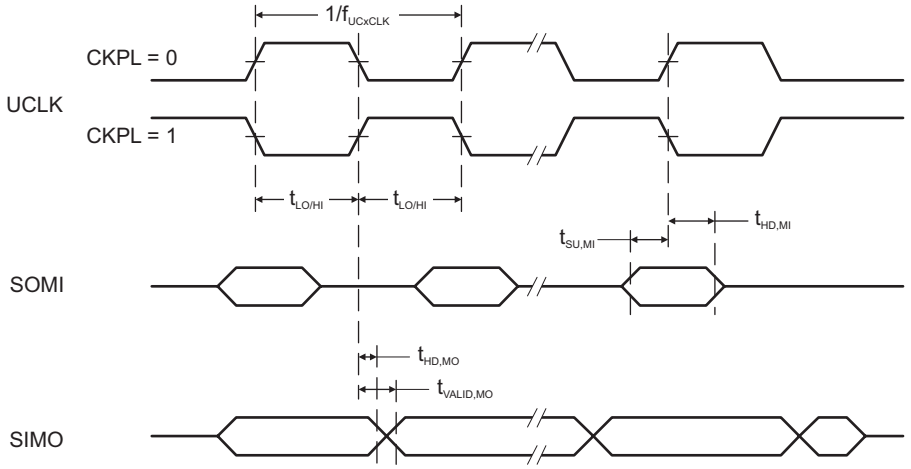

Figure 5-8. SPI Master Mode, CKPH = 1

5.32 USCI (SPI Slave Mode)

over recommended ranges of supply voltage and operating free-air temperature (unless otherwise noted)[1]
(see Figure 5-9 and Figure 5-10)

PARAMETER		TEST CONDITIONS	V_{CC}	MIN	MAX	UNIT
$t_{STE,LEAD}$	STE lead time, STE low to clock	PMMCOREV = 0	1.8 V	11		ns
			3 V	8		
		PMMCOREV = 3	2.4 V	7		
			3 V	6		
$t_{STE,LAG}$	STE lag time, Last clock to STE high	PMMCOREV = 0	1.8 V	3		ns
			3 V	3		
		PMMCOREV = 3	2.4 V	3		
			3 V	3		
$t_{STE,ACC}$	STE access time, STE low to SOMI data out	PMMCOREV = 0	1.8 V		66	ns
			3 V		50	
		PMMCOREV = 3	2.4 V		36	
			3 V		30	
$t_{STE,DIS}$	STE disable time, STE high to SOMI high impedance	PMMCOREV = 0	1.8 V		30	ns
			3 V		23	
		PMMCOREV = 3	2.4 V		16	
			3 V		13	
$t_{SU,SI}$	SIMO input data setup time	PMMCOREV = 0	1.8 V	5		ns
			3 V	5		
		PMMCOREV = 3	2.4 V	2		
			3 V	2		
$t_{HD,SI}$	SIMO input data hold time	PMMCOREV = 0	1.8 V	5		ns
			3 V	5		
		PMMCOREV = 3	2.4 V	5		
			3 V	5		
$t_{VALID,SO}$	SOMI output data valid time [2]	UCLK edge to SOMI valid, C_L = 20 pF, PMMCOREV = 0	1.8 V		76	ns
			3 V		60	
		UCLK edge to SOMI valid, C_L = 20 pF, PMMCOREV = 3	2.4 V		44	
			3 V		40	
$t_{HD,SO}$	SOMI output data hold time [3]	C_L = 20 pF, PMMCOREV = 0	1.8 V	18		ns
			3 V	12		
		C_L = 20 pF, PMMCOREV = 3	2.4 V	10		
			3 V	8		

(1) $f_{UCxCLK} = 1/2t_{LO/HI}$ with $t_{LO/HI} \geq \max(t_{VALID,MO(Master)} + t_{SU,SI(USCI)}, t_{SU,MI(Master)} + t_{VALID,SO(USCI)})$
For the master parameters $t_{SU,MI(Master)}$ and $t_{VALID,MO(Master)}$, see the SPI parameters of the attached master.
(2) Specifies the time to drive the next valid data to the SOMI output after the output changing UCLK clock edge. See the timing diagrams in Figure 5-9 and Figure 5-10.
(3) Specifies how long data on the SOMI output is valid after the output changing UCLK clock edge. See the timing diagrams in Figure 5-9 and Figure 5-10.

Copyright © 2010–2020, Texas Instruments Incorporated

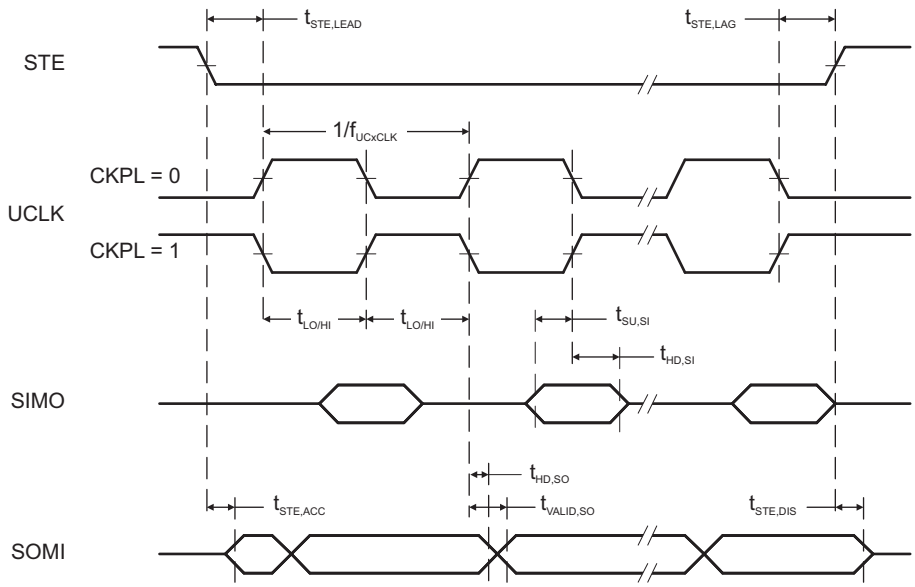

Figure 5-9. SPI Slave Mode, CKPH = 0

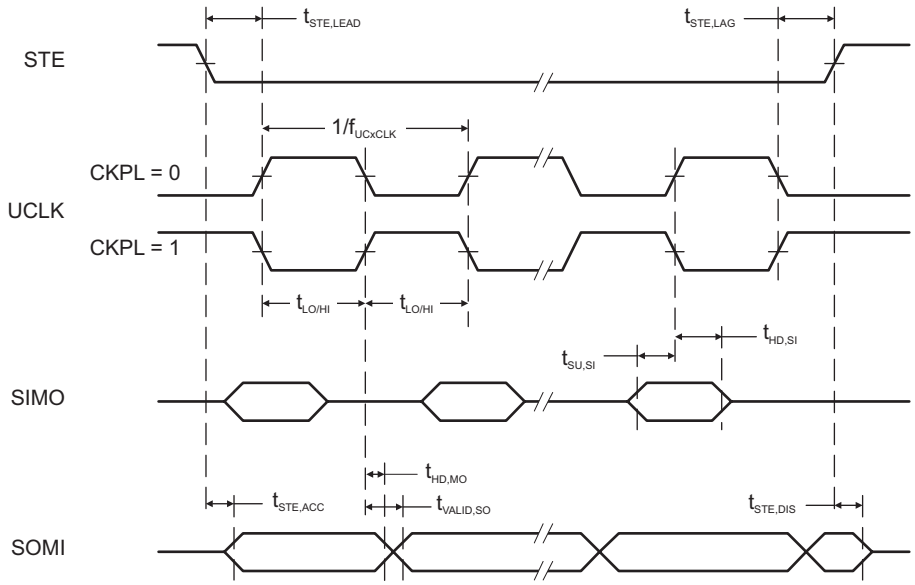

Figure 5-10. SPI Slave Mode, CKPH = 1

5.33 USCI (I^2C Mode)

over recommended ranges of supply voltage and operating free-air temperature (unless otherwise noted) (see Figure 5-11)

PARAMETER		TEST CONDITIONS	V_{CC}	MIN	MAX	UNIT
f_{USCI}	USCI input clock frequency	Internal: SMCLK or ACLK, External: UCLK, Duty cycle = 50% ±10%			f_{SYSTEM}	MHz
f_{SCL}	SCL clock frequency		2.2 V, 3 V	0	400	kHz
$t_{HD,STA}$	Hold time (repeated) START	f_{SCL} ≤ 100 kHz	2.2 V, 3 V	4.0		µs
		f_{SCL} > 100 kHz		0.6		
$t_{SU,STA}$	Setup time for a repeated START	f_{SCL} ≤ 100 kHz	2.2 V, 3 V	4.7		µs
		f_{SCL} > 100 kHz		0.6		
$t_{HD,DAT}$	Data hold time		2.2 V, 3 V	0		ns
$t_{SU,DAT}$	Data setup time		2.2 V, 3 V	250		ns
$t_{SU,STO}$	Setup time for STOP	f_{SCL} ≤ 100 kHz	2.2 V, 3 V	4.0		µs
		f_{SCL} > 100 kHz		0.6		
t_{SP}	Pulse duration of spikes suppressed by input filter		2.2 V	50	600	ns
			3 V	50	600	

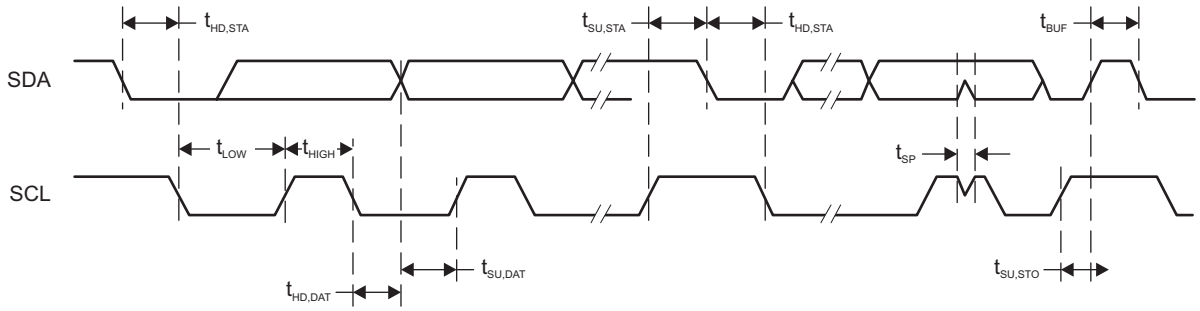

Figure 5-11. I^2C Mode Timing

Copyright © 2010–2020, Texas Instruments Incorporated

5.34 10-Bit ADC, Power Supply and Input Range Conditions

over recommended ranges of supply voltage and operating free-air temperature (unless otherwise noted)[1]

PARAMETER		TEST CONDITIONS	V_{CC}	MIN	TYP	MAX	UNIT
AV_{CC}	Analog supply voltage	AV_{CC} and DV_{CC} are connected together, AV_{SS} and DV_{SS} are connected together, $V_{(AVSS)} = V_{(DVSS)} = 0$ V		1.8		3.6	V
$V_{(Ax)}$	Analog input voltage range [2]	All ADC10_A pins: P6.0 to P6.7, P5.0, and P5.1 terminals		0		AV_{CC}	V
I_{ADC10_A}	Operating supply current into AVCC terminal. REF module and reference buffer off.	$f_{ADC10CLK}$ = 5 MHz, ADC10ON = 1, REFON = 0, SHT0 = 0, SHT1 = 0, ADC10DIV = 0, ADC10SREF = 00	2.2 V		60	100	µA
			3 V		75	110	
	Operating supply current into AVCC terminal. REF module on, reference buffer on.	$f_{ADC10CLK}$ = 5 MHz, ADC10ON = 1, REFON = 1, SHT0 = 0, SHT1 = 0, ADC10DIV = 0, ADC10SREF = 01	3 V		113	150	
	Operating supply current into AVCC terminal. REF module off, reference buffer on.	$f_{ADC10CLK}$ = 5 MHz, ADC10ON = 1, REFON = 0, SHT0 = 0, SHT1 = 0, ADC10DIV = 0, ADC10SREF = 10, VEREF = 2.5 V	3 V		105	140	
	Operating supply current into AVCC terminal. REF module off, reference buffer off.	$f_{ADC10CLK}$ = 5 MHz, ADC10ON = 1, REFON = 0, SHT0 = 0, SHT1 = 0, ADC10DIV = 0, ADC10SREF = 11, VEREF = 2.5 V	3 V		70	110	
C_I	Input capacitance	Only one terminal Ax can be selected at one time from the pad to the ADC10_A capacitor array including wiring and pad.	2.2 V		3.5		pF
R_I	Input MUX ON resistance	AV_{CC} > 2.0 V, 0 V ≤ V_{Ax} ≤ AV_{CC}				36	kΩ
		1.8 V < AV_{CC} < 2.0 V, 0 V ≤ V_{Ax} ≤ AV_{CC}				96	

(1) The leakage current is defined in the leakage current table with P6.x/Ax parameter.
(2) The analog input voltage range must be within the selected reference voltage range V_{R+} to V_{R-} for valid conversion results. The external reference voltage requires decoupling capacitors. Two decoupling capacitors, 10 µF and 100 nF, should be connected to VeREF to decouple the dynamic current required for an external reference source if it is used for the ADC10_A. See also the *MSP430F5xx and MSP430F6xx Family User's Guide*.

5.35 10-Bit ADC, Timing Parameters

over recommended ranges of supply voltage and operating free-air temperature (unless otherwise noted)

PARAMETER		TEST CONDITIONS	V_{CC}	MIN	TYP	MAX	UNIT
$f_{ADC10CLK}$		For specified performance of ADC10_A linearity parameters	2.2 V, 3 V	0.45	5	5.5	MHz
$f_{ADC10OSC}$	Internal ADC10_A oscillator [1]	ADC10DIV = 0, $f_{ADC10CLK} = f_{ADC10OSC}$	2.2 V, 3 V	4.2	4.8	5.4	MHz
$t_{CONVERT}$	Conversion time	REFON = 0, Internal oscillator, 12 ADC10CLK cycles, 10-bit mode, $f_{ADC10OSC}$ = 4 MHz to 5 MHz	2.2 V, 3 V	2.4		3.0	µs
		External $f_{ADC10CLK}$ from ACLK, MCLK or SMCLK, ADC10SSEL ≠ 0			12 × 1 / $f_{ADC10CLK}$		
$t_{ADC10ON}$	Turnon settling time of the ADC	See [2]				100	ns
t_{Sample}	Sampling time	R_S = 1000 Ω, R_I = 96 kΩ, C_I = 3.5 pF[3]	1.8 V	3			µs
		R_S = 1000 Ω, R_I = 36 kΩ, C_I = 3.5 pF[3]	3 V	1			µs

(1) The ADC10OSC is sourced directly from MODOSC inside the UCS.
(2) The condition is that the error in a conversion started after $t_{ADC10ON}$ is less than ±0.5 LSB. The reference and input signal are already settled.
(3) Approximately 8 Tau (τ) are required for an error of less than ±0.5 LSB

5.36 10-Bit ADC, Linearity Parameters

over recommended ranges of supply voltage and operating free-air temperature (unless otherwise noted)

PARAMETER		TEST CONDITIONS	V_{CC}	MIN	TYP	MAX	UNIT
E_I	Integral linearity error	$1.4\ V \le (V_{eREF+} - V_{eREF-}) \le 1.6\ V$, $C_{VeREF+} = 20\ pF$	2.2 V, 3 V			±1.0	LSB
		$1.6\ V < (V_{eREF+} - V_{eREF-}) \le V_{AVCC}$, $C_{VeREF+} = 20\ pF$				±1.0	
E_D	Differential linearity error	$1.4\ V \le (V_{eREF+} - V_{eREF-})$, $C_{VeREF+} = 20\ pF$	2.2 V, 3 V			±1.0	LSB
E_O	Offset error	$1.4\ V \le (V_{eREF+} - V_{eREF-})$, $C_{VeREF+} = 20\ pF$, Internal impedance of source $R_S < 100\ \Omega$	2.2 V, 3 V			±1.0	LSB
E_G	Gain error	$1.4\ V \le (V_{eREF+} - V_{eREF-})$, $C_{VeREF+} = 20\ pF$, ADC10SREFx = 11b	2.2 V, 3 V			±1.0	LSB
E_T	Total unadjusted error	$1.4\ V \le (V_{eREF+} - V_{eREF-})$, $C_{VeREF+} = 20\ pF$, ADC10SREFx = 11b	2.2 V, 3 V		±1.0	±2.0	LSB

5.37 REF, External Reference

over recommended ranges of supply voltage and operating free-air temperature (unless otherwise noted)[1]

PARAMETER		TEST CONDITIONS	V_{CC}	MIN	TYP	MAX	UNIT
V_{eREF+}	Positive external reference voltage input	$V_{eREF+} > V_{eREF-}$ [2]		1.4		AV_{CC}	V
V_{eREF-}	Negative external reference voltage input	$V_{eREF+} > V_{eREF-}$ [3]		0		1.2	V
$(V_{eREF+} - V_{eREF-})$	Differential external reference voltage input	$V_{eREF+} > V_{eREF-}$ [4]		1.4		AV_{CC}	V
I_{VeREF+} I_{VeREF-}	Static input current	$1.4\ V \le V_{eREF+} \le V_{AVCC}$, $V_{eREF-} = 0\ V$, $f_{ADC10CLK} = 5\ MHz$, ADC10SHTx = 0x0001, Conversion rate 200 ksps	2.2 V, 3 V		±8.5	±26	µA
		$1.4\ V \le V_{eREF+} \le V_{AVCC}$, $V_{eREF-} = 0\ V$, $f_{ADC10CLK} = 5\ MHz$, ADC10SHTX = 0x1000, Conversion rate 20 ksps				±1	
$C_{VREF+/-}$	Capacitance at VeREF+ or VeREF- terminal	[5]		10			µF

(1) The external reference is used during ADC conversion to charge and discharge the capacitance array. The input capacitance, C_I, is also the dynamic load for an external reference during conversion. The dynamic impedance of the reference supply should follow the recommendations on analog-source impedance to allow the charge to settle for 10-bit accuracy.
(2) The accuracy limits the minimum positive external reference voltage. Lower reference voltage levels may be applied with reduced accuracy requirements.
(3) The accuracy limits the maximum negative external reference voltage. Higher reference voltage levels may be applied with reduced accuracy requirements.
(4) The accuracy limits minimum external differential reference voltage. Lower differential reference voltage levels may be applied with reduced accuracy requirements.
(5) Two decoupling capacitors, 10 µF and 100 nF, should be connected to VeREF to decouple the dynamic current required for an external reference source if it is used for the ADC10_A. See also the *MSP430F5xx and MSP430F6xx Family User's Guide*.

Copyright © 2010–2020, Texas Instruments Incorporated

5.38 REF, Built-In Reference

over recommended ranges of supply voltage and operating free-air temperature (unless otherwise noted)[1]

PARAMETER		TEST CONDITIONS	V_{CC}	MIN	TYP	MAX	UNIT
V_{REF+}	Positive built-in reference voltage	REFVSEL = {2} for 2.5 V, REFON = 1	3 V		2.51	±1.5%	V
		REFVSEL = {1} for 2.0 V, REFON = 1	3 V		1.99	±1.5%	
		REFVSEL = {0} for 1.5 V, REFON = 1	2.2 V, 3 V		1.5	±1.5%	
$AV_{CC(min)}$	AVCC minimum voltage, Positive built-in reference active	REFVSEL = {0} for 1.5 V		1.8			V
		REFVSEL = {1} for 2.0 V		2.2			
		REFVSEL = {2} for 2.5 V		2.7			
I_{REF+}	Operating supply current into AVCC terminal [2]	$f_{ADC10CLK}$ = 5.0 MHz, REFON = 1, REFBURST = 0, REFVSEL = {2} for 2.5 V	3 V		18	24	µA
		$f_{ADC10CLK}$ = 5.0 MHz, REFON = 1, REFBURST = 0, REFVSEL = {1} for 2.0 V	3 V		15.5	21	
		$f_{ADC10CLK}$ = 5.0 MHz, REFON = 1, REFBURST = 0, REFVSEL = {0} for 1.5V	3 V		13.5	21	
TC_{REF+}	Temperature coefficient of built-in reference [3]	I_{VREF+} = 0 A, REFVSEL = {0, 1, 2}, REFON = 1			30	50	ppm/°C
I_{SENSOR}	Operating supply current into AVCC terminal [4]	REFON = 0, INCH = 0Ah, ADC10ON = NA, T_A = 30°C	2.2 V		20	22	µA
			3 V		20	22	
V_{SENSOR}	See [5]	ADC10ON = 1, INCH = 0Ah, T_A = 30°C	2.2 V		770		mV
			3 V		770		
V_{MID}	AVCC divider at channel 11	ADC10ON = 1, INCH = 0Bh, $V_{MID} \approx 0.5 \times V_{AVCC}$	2.2 V	1.06	1.1	1.14	V
			3 V	1.46	1.5	1.54	
$t_{SENSOR(sample)}$	Sample time required if channel 10 is selected [6]	ADC10ON = 1, INCH = 0Ah, Error of conversion result ≤ 1 LSB		30			µs
$t_{VMID(sample)}$	Sample time required if channel 11 is selected [7]	ADC10ON = 1, INCH = 0Bh, Error of conversion result ≤ 1 LSB		1			µs
PSRR_DC	Power supply rejection ratio (DC)	$AV_{CC} = AV_{CC(min)}$ to $AV_{CC(max)}$, T_A = 25°C, REFVSEL = {0, 1, 2}, REFON = 1			120		µV/V
PSRR_AC	Power supply rejection ratio (AC)	$AV_{CC} = AV_{CC(min)}$ to $AV_{CC(max)}$, T_A = 25°C, f = 1 kHz, ΔVpp = 100 mV, REFVSEL = {0, 1, 2}, REFON = 1			6.4		mV/V
t_{SETTLE}	Settling time of reference voltage[8]	$AV_{CC} = AV_{CC(min)}$ to $AV_{CC(max)}$, REFVSEL = {0, 1, 2}, REFON = 0 → 1			75		µs

(1) The leakage current is defined in the leakage current table with P6.x/Ax parameter.
(2) The internal reference current is supplied through the AVCC terminal. Consumption is independent of the ADC10ON control bit, unless a conversion is active. The REFON bit enables to settle the built-in reference before starting an A/D conversion.
(3) Calculated using the box method: (MAX(–40°C to 85°C) – MIN(–40°C to 85°C)) / MIN(–40°C to 85°C) / (85°C – (–40°C)).
(4) The sensor current I_{SENSOR} is consumed if (ADC10ON = 1 and REFON = 1) or (ADC10ON = 1 and INCH = 0Ah and sample signal is high). When REFON = 1, I_{SENSOR} is already included in I_{REF+}.
(5) The temperature sensor offset can be significant. TI recommends a single-point calibration to minimize the offset error of the built-in temperature sensor.
(6) The typical equivalent impedance of the sensor is 51 kΩ. The sample time required includes the sensor-on time $t_{SENSOR(on)}$.
(7) The on-time $t_{VMID(on)}$ is included in the sampling time $t_{VMID(sample)}$; no additional on time is needed.
(8) The condition is that the error in a conversion started after t_{REFON} is less than ±0.5 LSB.

5.39 Comparator_B

over recommended ranges of supply voltage and operating free-air temperature (unless otherwise noted)

PARAMETER		TEST CONDITIONS	V_{CC}	MIN	TYP	MAX	UNIT
V_{CC}	Supply voltage			1.8		3.6	V
I_{AVCC_COMP}	Comparator operating supply current into AVCC, Excludes reference resistor ladder	CBPWRMD = 00, CBON = 1, CBRSx = 00	1.8 V			40	µA
			2.2 V		30	50	
			3 V		40	65	
		CBPWRMD = 01, CBON = 1, CBRSx = 00	2.2 V, 3 V		10	17	
		CBPWRMD = 10, CBON = 1, CBRSx = 00	2.2 V, 3 V		0.1	0.5	
I_{AVCC_REF}	Quiescent current of resistor ladder into AVCC, Including REF module current	CBREFACC = 1, CBREFLx = 01, CBRSx = 10, REFON = 0, CBON = 0	2.2 V, 3 V		10	17	µA
		CBREFACC = 0, CBREFLx = 01, CBRSx = 10, REFON = 0, CBON = 0	2.2 V, 3 V			22	
V_{IC}	Common mode input range			0		V_{CC} – 1	V
V_{OFFSET}	Input offset voltage	CBPWRMD = 00				±20	mV
		CBPWRMD = 01, 10				±10	
C_{IN}	Input capacitance				5		pF
R_{SIN}	Series input resistance	On (switch closed)			3	4	kΩ
		Off (switch open)		50			MΩ
t_{PD}	Propagation delay, response time	CBPWRMD = 00, CBF = 0				450	ns
		CBPWRMD = 01, CBF = 0				600	
		CBPWRMD = 10, CBF = 0				50	µs
$t_{PD,filter}$	Propagation delay with filter active	CBPWRMD = 00, CBON = 1, CBF = 1, CBFDLY = 00		0.35	0.6	1.0	µs
		CBPWRMD = 00, CBON = 1, CBF = 1, CBFDLY = 01		0.6	1.0	1.8	
		CBPWRMD = 00, CBON = 1, CBF = 1, CBFDLY = 10		1.0	1.8	3.4	
		CBPWRMD = 00, CBON = 1, CBF = 1, CBFDLY = 11		1.8	3.4	6.5	
t_{EN_CMP}	Comparator enable time	CBON = 0 to CBON = 1, CBPWRMD = 00, 01			1	2	µs
		CBON = 0 to CBON = 1, CBPWRMD = 10				100	
t_{EN_REF}	Resistor reference enable time	CBON = 0 to CBON = 1			1	1.5	µs
V_{CB_REF}	Reference voltage for a given tap	VIN = reference into resistor ladder, n = 0 to 31		VIN × (n + 0.5) / 32	VIN × (n + 1) / 32	VIN × (n + 1.5) / 32	V

Copyright © 2010–2020, Texas Instruments Incorporated

5.40 Ports PU.0 and PU.1

over recommended ranges of supply voltage and operating free-air temperature (unless otherwise noted)

PARAMETER		TEST CONDITIONS	MIN	MAX	UNIT
V_{OH}	High-level output voltage	V_{LDOO} = 3.3 V ±10%, I_{OH} = –25 mA, See Figure 5-13 for typical characteristics	2.4		V
V_{OL}	Low-level output voltage	V_{LDOO} = 3.3 V ±10%, I_{OL} = 25 mA, See Figure 5-12 for typical characteristics		0.4	V
V_{IH}	High-level input voltage	V_{LDOO} = 3.3 V ±10%, See Figure 5-14 for typical characteristics	2.0		V
V_{IL}	Low-level input voltage	V_{LDOO} = 3.3 V ±10%, See Figure 5-14 for typical characteristics		0.8	V

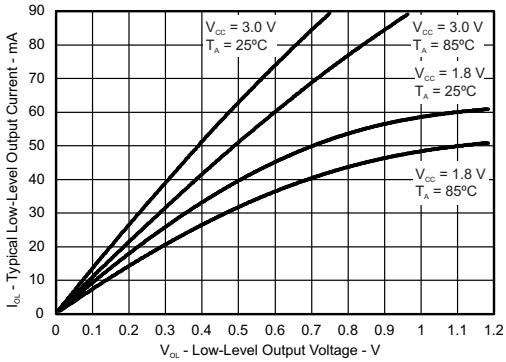

Figure 5-12. Ports PU.0, PU.1 Typical Low-Level Output Characteristics

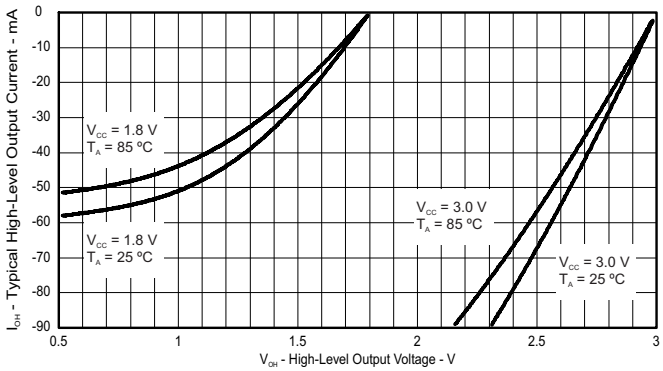

Figure 5-13. Ports PU.0, PU.1 Typical High-Level Output Characteristics

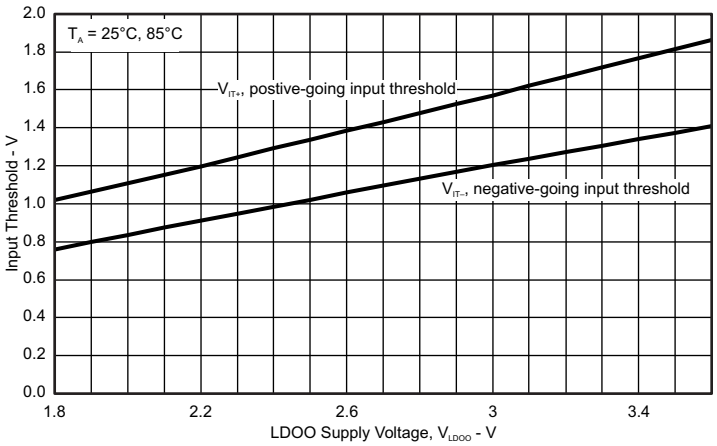

Figure 5-14. Ports PU.0, PU.1 Typical Input Threshold Characteristics

5.41 LDO-PWR (LDO Power System)

over recommended ranges of supply voltage and operating free-air temperature (unless otherwise noted)

PARAMETER		TEST CONDITIONS	MIN	TYP	MAX	UNIT
V_{LAUNCH}	LDO input detection threshold				3.75	V
V_{LDOI}	LDO input voltage		3.76		5.5	V
V_{LDO}	LDO output voltage			3.3	±9%	V
V_{LDO_EXT}	LDOO terminal input voltage with LDO disabled	LDO disabled	1.8		3.6	V
I_{LDOO}	Maximum external current from LDOO terminal	LDO is on			20	mA
I_{DET}	LDO current overload detection (1)		60		100	mA
C_{LDOI}	LDOI terminal recommended capacitance			4.7		µF
C_{LDOO}	LDOO terminal recommended capacitance			220		nF
t_{ENABLE}	Settling time V_{LDO}	Within 2%, recommended capacitances			2	ms

(1) A current overload will be detected when the total current supplied from the LDO exceeds this value.

Copyright © 2010–2020, Texas Instruments Incorporated

5.42 Flash Memory

over recommended ranges of supply voltage and operating free-air temperature (unless otherwise noted)

PARAMETER		T_J	MIN	TYP	MAX	UNIT
$DV_{CC(PGM/ERASE)}$	Program or erase supply voltage		1.8		3.6	V
$t_{READMARGIN}$	Read access time during margin mode				200	ns
I_{PGM}	Supply current from DVCC during program			3	5	mA
I_{ERASE}	Supply current from DVCC during erase			2	6.5	mA
I_{MERASE}, I_{BANK}	Supply current from DVCC during mass erase or bank erase			2	6.5	mA
t_{CPT}	Cumulative program time (1)				16	ms
	Program and erase endurance		10^4	10^5		cycles
$t_{Retention}$	Data retention duration	25°C	100			years
t_{Word}	Word or byte program time (2)		64		85	µs
$t_{Block, 0}$	Block program time for first byte or word (2)		49		65	µs
$t_{Block, 1–(N–1)}$	Block program time for each additional byte or word, except for last byte or word (2)		37		49	µs
$t_{Block, N}$	Block program time for last byte or word (2)		55		73	µs
t_{Erase}	Erase time for segment, mass erase, and bank erase when available (2)		23		32	ms

(1) The cumulative program time must not be exceeded when writing to a 128-byte flash block. This parameter applies to all programming methods: individual word or byte write and block write modes.
(2) These values are hardwired into the state machine of the flash controller.

5.43 JTAG and Spy-Bi-Wire Interface

over recommended ranges of supply voltage and operating free-air temperature (unless otherwise noted)

PARAMETER		V_{CC}	MIN	TYP	MAX	UNIT
f_{SBW}	Spy-Bi-Wire input frequency	2.2 V, 3 V	0		20	MHz
$t_{SBW,Low}$	Spy-Bi-Wire low clock pulse duration	2.2 V, 3 V	0.025		15	µs
$t_{SBW, En}$	Spy-Bi-Wire enable time (TEST high to acceptance of first clock edge) (1)	2.2 V, 3 V			1	µs
$t_{SBW,Rst}$	Spy-Bi-Wire return to normal operation time		15		100	µs
f_{TCK}	TCK input frequency, 4-wire JTAG (2)	2.2 V	0		5	MHz
		3 V	0		10	MHz
$R_{internal}$	Internal pulldown resistance on TEST	2.2 V, 3 V	45	60	80	kΩ

(1) Tools that access the Spy-Bi-Wire and BSL interfaces must wait for the $t_{SBW,En}$ time after the first transition of the TEST/SBWTCK pin (low to high), before the second transition of the pin (high to low) during the entry sequence.
(2) f_{TCK} may be restricted to meet the timing requirements of the module selected.

6 Detailed Description

6.1 CPU (Link to User's Guide)

The MSP430 CPU has a 16-bit RISC architecture that is highly transparent to the application. All operations, other than program-flow instructions, are performed as register operations in conjunction with seven addressing modes for source operand and four addressing modes for destination operand.

The CPU is integrated with 16 registers that provide reduced instruction execution time. The register-to-register operation execution time is one cycle of the CPU clock. Four of the registers, R0 to R3, are dedicated as program counter, stack pointer, status register, and constant generator, respectively. The remaining registers are general-purpose registers (see Figure 6-1).

Peripherals are connected to the CPU using data, address, and control buses. Peripherals can be managed with all instructions.

The instruction set consists of the original 51 instructions with three formats and seven address modes and additional instructions for the expanded address range. Each instruction can operate on word and byte data.

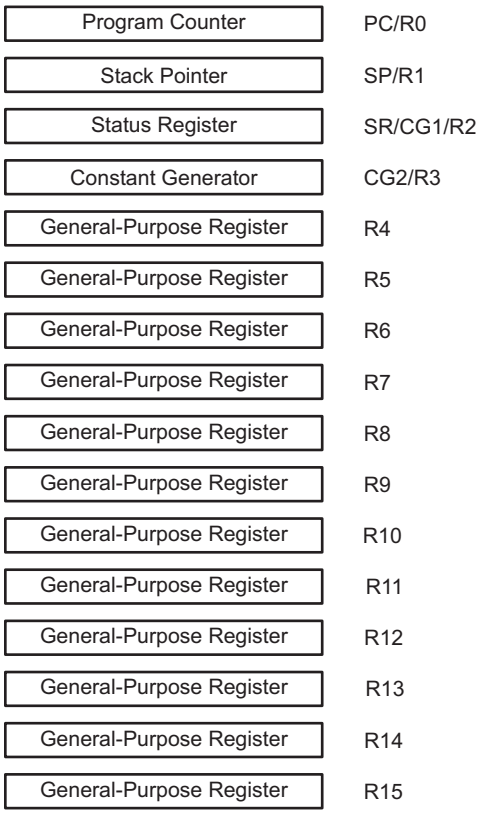

Figure 6-1. Integrated CPU Registers

Copyright © 2010–2020, Texas Instruments Incorporated

6.2 Operating Modes

These microcontrollers have one active mode and six software-selectable low-power modes of operation. An interrupt event can wake up the device from any of the low-power modes, service the request, and restore back to the low-power mode on return from the interrupt program.

Software can configure the following operating modes:

- Active mode (AM)
  - All clocks are active
- Low-power mode 0 (LPM0)
  - CPU is disabled
  - ACLK and SMCLK remain active, MCLK is disabled
  - FLL loop control remains active
- Low-power mode 1 (LPM1)
  - CPU is disabled
  - FLL loop control is disabled
  - ACLK and SMCLK remain active, MCLK is disabled
- Low-power mode 2 (LPM2)
  - CPU is disabled
  - MCLK, FLL loop control, and DCOCLK are disabled
  - DC generator of the DCO remains enabled
  - ACLK remains active
- Low-power mode 3 (LPM3)
  - CPU is disabled
  - MCLK, FLL loop control, and DCOCLK are disabled
  - DC generator of the DCO is disabled
  - ACLK remains active
- Low-power mode 4 (LPM4)
  - CPU is disabled
  - ACLK is disabled
  - MCLK, FLL loop control, and DCOCLK are disabled
  - DC generator of the DCO is disabled
  - Crystal oscillator is stopped
  - Complete data retention
- Low-power mode 4.5 (LPM4.5)
  - Internal regulator disabled
  - No data retention
  - Wake-up input from $\overline{\text{RST}}$/NMI, P1, and P2

6.3 Interrupt Vector Addresses

The interrupt vectors and the power-up start address are in the address range 0FFFFh to 0FF80h (see Table 6-1). The vector contains the 16-bit address of the appropriate interrupt-handler instruction sequence.

Table 6-1. Interrupt Sources, Flags, and Vectors

INTERRUPT SOURCE	INTERRUPT FLAG	SYSTEM INTERRUPT	WORD ADDRESS	PRIORITY
System Reset Power up External reset Watchdog time-out, password violation Flash memory password violation	WDTIFG, KEYV (SYSRSTIV) (1) (2)	Reset	0FFFEh	63, highest
System NMI PMM Vacant memory access JTAG mailbox	SVMLIFG, SVMHIFG, DLYLIFG, DLYHIFG, VLRLIFG, VLRHIFG, VMAIFG, JMBNIFG, JMBOUTIFG (SYSSNIV) (1)	(Non)maskable	0FFFCh	62
User NMI NMI Oscillator fault Flash memory access violation	NMIIFG, OFIFG, ACCVIFG, BUSIFG (SYSUNIV) (1) (2)	(Non)maskable	0FFFAh	61
Comp_B	Comparator B interrupt flags (CBIV) (1) (3)	Maskable	0FFF8h	60
TB0	TB0CCR0 CCIFG0 (3)	Maskable	0FFF6h	59
TB0	TB0CCR1 CCIFG1 to TB0CCR6 CCIFG6, TB0IFG (TB0IV) (1) (3)	Maskable	0FFF4h	58
Watchdog Timer_A interval timer mode	WDTIFG	Maskable	0FFF2h	57
USCI_A0 receive or transmit	UCA0RXIFG, UCA0TXIFG (UCA0IV) (1) (3)	Maskable	0FFF0h	56
USCI_B0 receive or transmit	UCB0RXIFG, UCB0TXIFG (UCAB0IV) (1) (3)	Maskable	0FFEEh	55
ADC10_A	ADC10IFG0 (1) (3) (4)	Maskable	0FFECh	54
TA0	TA0CCR0 CCIFG0 (3)	Maskable	0FFEAh	53
TA0	TA0CCR1 CCIFG1 to TA0CCR4 CCIFG4, TA0IFG (TA0IV) (1) (3)	Maskable	0FFE8h	52
LDO-PWR	LDOOFFIG, LDOONIFG, LDOOVLIFG	Maskable	0FFE6h	51
DMA	DMA0IFG, DMA1IFG, DMA2IFG (DMAIV) (1) (3)	Maskable	0FFE4h	50
TA1	TA1CCR0 CCIFG0 (3)	Maskable	0FFE2h	49
TA1	TA1CCR1 CCIFG1 to TA1CCR2 CCIFG2, TA1IFG (TA1IV) (1) (3)	Maskable	0FFE0h	48
I/O port P1	P1IFG.0 to P1IFG.7 (P1IV) (1) (3)	Maskable	0FFDEh	47
USCI_A1 receive or transmit	UCA1RXIFG, UCA1TXIFG (UCA1IV) (1) (3)	Maskable	0FFDCh	46
USCI_B1 receive or transmit	UCB1RXIFG, UCB1TXIFG (UCB1IV) (1) (3)	Maskable	0FFDAh	45
TA2	TA2CCR0 CCIFG0 (3)	Maskable	0FFD8h	44
TA2	TA2CCR1 CCIFG1 to TA2CCR2 CCIFG2, TA2IFG (TA2IV) (1) (3)	Maskable	0FFD6h	43
I/O port P2	P2IFG.0 to P2IFG.7 (P2IV) (1) (3)	Maskable	0FFD4h	42
RTC_A	RTCRDYIFG, RTCTEVIFG, RTCAIFG, RT0PSIFG, RT1PSIFG (RTCIV) (1) (3)	Maskable	0FFD2h	41

(1) Multiple source flags
(2) A reset is generated if the CPU tries to fetch instructions from within peripheral space or vacant memory space.
(Non)maskable: the individual interrupt enable bit can disable an interrupt event, but the general interrupt enable bit cannot disable it.
(3) Interrupt flags are in the module.
(4) Only on devices with ADC, otherwise reserved.

Copyright © 2010–2020, Texas Instruments Incorporated

Table 6-1. Interrupt Sources, Flags, and Vectors (continued)

INTERRUPT SOURCE	INTERRUPT FLAG	SYSTEM INTERRUPT	WORD ADDRESS	PRIORITY
Reserved	Reserved (5)		0FFD0h	40
			⋮	⋮
			0FF80h	0, lowest

(5) Reserved interrupt vectors at addresses are not used in this device and can be used for regular program code if necessary. To maintain compatibility with other devices, TI recommends reserving these locations.

6.4 Memory Organization

Table 6-2 summarizes the memory map for all device variants.

Table 6-2. Memory Organization(1)

		MSP430F5304	MSP430F5308	MSP430F5309	MSP430F5310
Memory (flash) Main: interrupt vector Main: code memory	Total Size	8KB 00FFFFh to 00FF80h 00FFFFh to 00E000h	16KB 00FFFFh to 00FF80h 00FFFFh to 00C000h	24KB 00FFFFh to 00FF80h 00FFFFh to 00A000h	32KB 00FFFFh to 00FF80h 00FFFFh to 008000h
RAM	Sector 1	2KB 0033FFh to 002C00h	2KB 0033FFh to 002C00h	2KB 0033FFh to 002C00h	2KB 0033FFh to 002C00h
	Sector 0	2KB 002BFFh to 002400h	2KB 002BFFh to 002400h	2KB 002BFFh to 002400h	2KB 002BFFh to 002400h
	Sector 7	2KB 0023FFh to 001C00h	2KB 0023FFh to 001C00h	2KB 0023FFh to 001C00h	2KB 0023FFh to 001C00h
Information memory (flash)	Info A	128 B 0019FFh to 001980h	128 B 0019FFh to 001980h	128 B 0019FFh to 001980h	128 B 0019FFh to 001980h
	Info B	128 B 00197Fh to 001900h	128 B 00197Fh to 001900h	128 B 00197Fh to 001900h	128 B 00197Fh to 001900h
	Info C	128 B 0018FFh to 001880h	128 B 0018FFh to 001880h	128 B 0018FFh to 001880h	128 B 0018FFh to 001880h
	Info D	128 B 00187Fh to 001800h	128 B 00187Fh to 001800h	128 B 00187Fh to 001800h	128 B 00187Fh to 001800h
Bootloader (BSL) memory (flash)	BSL 3	512 B 0017FFh to 001600h	512 B 0017FFh to 001600h	512 B 0017FFh to 001600h	512 B 0017FFh to 001600h
	BSL 2	512 B 0015FFh to 001400h	512 B 0015FFh to 001400h	512 B 0015FFh to 001400h	512 B 0015FFh to 001400h
	BSL 1	512 B 0013FFh to 001200h	512 B 0013FFh to 001200h	512 B 0013FFh to 001200h	512 B 0013FFh to 001200h
	BSL 0	512 B 0011FFh to 001000h	512 B 0011FFh to 001000h	512 B 0011FFh to 001000h	512 B 0011FFh to 001000h
Peripherals	Size	4KB 000FFFh to 0h	4KB 000FFFh to 0h	4KB 000FFFh to 0h	4KB 000FFFh to 0h

(1) N/A = Not available

6.5 Bootloader (BSL)

The BSL enables users to program the flash memory or RAM using a UART serial interface. Access to the device memory through the BSL is protected by user-defined password. Use of the UART BSL requires external access to six pins (see Table 6-3). For complete description of the features of the BSL and its implementation, see *MSP430 Flash Device Bootloader (BSL) User's Guide*. Table 6-3 lists the BSL pin requirements.

Table 6-3. BSL Pin Functions

DEVICE SIGNAL	BSL FUNCTION
$\overline{\text{RST}}$/NMI/SBWTDIO	Entry sequence signal
TEST/SBWTCK	Entry sequence signal
P1.1	Data transmit
P1.2	Data receive
VCC	Power supply
VSS	Ground supply

6.6 JTAG Operation

6.6.1 JTAG Standard Interface

The MSP430 family supports the standard JTAG interface, which requires four signals for sending and receiving data. The JTAG signals are shared with general-purpose I/O. The TEST/SBWTCK pin is used to enable the JTAG signals. In addition to these signals, the $\overline{\text{RST}}$/NMI/SBWTDIO is required to interface with MSP430 development tools and device programmers. Table 6-4 lists the JTAG pin requirements. For further details on interfacing to development tools and device programmers, see the *MSP430 Hardware Tools User's Guide*. For a complete description of the features of the JTAG interface and its implementation, see *MSP430 Programming With the JTAG Interface*.

Table 6-4. JTAG Pin Requirements and Functions

DEVICE SIGNAL	DIRECTION	FUNCTION
PJ.3/TCK	IN	JTAG clock input
PJ.2/TMS	IN	JTAG state control
PJ.1/TDI/TCLK	IN	JTAG data input, TCLK input
PJ.0/TDO	OUT	JTAG data output
TEST/SBWTCK	IN	Enable JTAG pins
$\overline{\text{RST}}$/NMI/SBWTDIO	IN	External reset
VCC		Power supply
VSS		Ground supply

6.6.2 Spy-Bi-Wire Interface

In addition to the standard JTAG interface, the MSP430 family supports the two wire Spy-Bi-Wire interface. Spy-Bi-Wire can be used to interface with MSP430 development tools and device programmers. Table 6-5 lists the Spy-Bi-Wire interface pin requirements. For further details on interfacing to development tools and device programmers, see the *MSP430 Hardware Tools User's Guide*. For a complete description of the features of the JTAG interface and its implementation, see *MSP430 Programming With the JTAG Interface*.

Copyright © 2010–2020, Texas Instruments Incorporated

Table 6-5. Spy-Bi-Wire Pin Requirements and Functions

DEVICE SIGNAL	DIRECTION	FUNCTION
TEST/SBWTCK	IN	Spy-Bi-Wire clock input
$\overline{\text{RST}}$/NMI/SBWTDIO	IN, OUT	Spy-Bi-Wire data input and output
VCC		Power supply
VSS		Ground supply

6.7 Flash Memory (Link to User's Guide)

The flash memory can be programmed through the JTAG port, Spy-Bi-Wire (SBW), the BSL, or in-system by the CPU. The CPU can perform single-byte, single-word, and long-word writes to the flash memory. Features of the flash memory include:

- Flash memory has n segments of main memory and four segments of information memory (A to D) of 128 bytes each. Each segment in main memory is 512 bytes in size.
- Segments 0 to n may be erased in one step, or each segment may be individually erased.
- Segments A to D can be erased individually, or as a group with segments 0 to n. Segments A to D are also called *information memory*.
- Segment A can be locked separately.

6.8 RAM (Link to User's Guide)

The RAM is made up of n sectors. Each sector can be completely powered down to save leakage; however, all data are lost. Features of the RAM include:

- RAM has n sectors. See Section 6.4 for the size of a sector.
- Each sector 0 to n can be completely disabled; however, data retention is lost.
- Each sector 0 to n automatically enters low power retention mode when possible.

6.9 Peripherals

Peripherals are connected to the CPU through data, address, and control buses. Peripherals can be handled using all instructions. For complete module descriptions, see the *MSP430F5xx and MSP430F6xx Family User's Guide*.

6.9.1 Digital I/O (Link to User's Guide)

Up to six 8-bit I/O ports are implemented: For 64-pin options, P1, P2, P4, and P6 are complete, P5 is reduced to 6-bit I/O, and P3 is reduced to 5-bit I/O. For 48-pin options, P6 is reduced to 4-bit I/O, P2 is reduced to 1-bit I/O, and P3 is completely removed. Port PJ contains four individual I/O ports, common to all devices.

- All individual I/O bits are independently programmable.
- Any combination of input, output, and interrupt conditions is possible.
- Pullup or pulldown on all ports is programmable.
- Drive strength on all ports is programmable.
- Edge-selectable interrupt and LPM4.5 wakeup input capability is available for all bits of ports P1 and P2.
- Read and write access to port-control registers is supported by all instructions.
- Ports can be accessed byte-wise (P1 through P6) or word-wise in pairs (PA through PC).

6.9.2 Port Mapping Controller (Link to User's Guide)

The port mapping controller allows the flexible and reconfigurable mapping of digital functions to port P4 (see Table 6-6). Table 6-7 lists the default settings for all pins that support port mapping.

Table 6-6. Port Mapping Mnemonics and Functions

VALUE	PxMAPy MNEMONIC	INPUT PIN FUNCTION	OUTPUT PIN FUNCTION
0	PM_NONE	None	DVSS
1	PM_CBOUT0	–	Comparator_B output
	PM_TB0CLK	TB0 clock input	–
2	PM_ADC10CLK	–	ADC10CLK
	PM_DMAE0	DMAE0 input	–
3	PM_SVMOUT	–	SVM output
	PM_TB0OUTH	TB0 high impedance input TB0OUTH	–
4	PM_TB0CCR0A	TB0 CCR0 capture input CCI0A	TB0 CCR0 compare output Out0
5	PM_TB0CCR1A	TB0 CCR1 capture input CCI1A	TB0 CCR1 compare output Out1
6	PM_TB0CCR2A	TB0 CCR2 capture input CCI2A	TB0 CCR2 compare output Out2
7	PM_TB0CCR3A	TB0 CCR3 capture input CCI3A	TB0 CCR3 compare output Out3
8	PM_TB0CCR4A	TB0 CCR4 capture input CCI4A	TB0 CCR4 compare output Out4
9	PM_TB0CCR5A	TB0 CCR5 capture input CCI5A	TB0 CCR5 compare output Out5
10	PM_TB0CCR6A	TB0 CCR6 capture input CCI6A	TB0 CCR6 compare output Out6
11	PM_UCA1RXD	USCI_A1 UART RXD (Direction controlled by USCI – input)	
	PM_UCA1SOMI	USCI_A1 SPI slave out master in (direction controlled by USCI)	
12	PM_UCA1TXD	USCI_A1 UART TXD (Direction controlled by USCI – output)	
	PM_UCA1SIMO	USCI_A1 SPI slave in master out (direction controlled by USCI)	
13	PM_UCA1CLK	USCI_A1 clock input/output (direction controlled by USCI)	
	PM_UCB1STE	USCI_B1 SPI slave transmit enable (direction controlled by USCI)	
14	PM_UCB1SOMI	USCI_B1 SPI slave out master in (direction controlled by USCI)	
	PM_UCB1SCL	USCI_B1 I^2C clock (open drain and direction controlled by USCI)	
15	PM_UCB1SIMO	USCI_B1 SPI slave in master out (direction controlled by USCI)	
	PM_UCB1SDA	USCI_B1 I^2C data (open drain and direction controlled by USCI)	
16	PM_UCB1CLK	USCI_B1 clock input/output (direction controlled by USCI)	
	PM_UCA1STE	USCI_A1 SPI slave transmit enable (direction controlled by USCI)	
17	PM_CBOUT1	None	Comparator_B output
18	PM_MCLK	None	MCLK
19	PM_RTCCLK	None	RTCCLK output
20	PM_UCA0RXD	USCI_A0 UART RXD (Direction controlled by USCI – input)	
	PM_UCA0SOMI	USCI_A0 SPI slave out master in (direction controlled by USCI)	
21	PM_UCA0TXD	USCI_A0 UART TXD (Direction controlled by USCI – output)	
	PM_UCA0SIMO	USCI_A0 SPI slave in master out (direction controlled by USCI)	
22	PM_UCA0CLK	USCI_A0 clock input/output (direction controlled by USCI)	
	PM_UCB0STE	USCI_B0 SPI slave transmit enable (direction controlled by USCI)	
23	PM_UCB0SOMI	USCI_B0 SPI slave out master in (direction controlled by USCI)	
	PM_UCB0SCL	USCI_B0 I^2C clock (open drain and direction controlled by USCI)	
24	PM_UCB0SIMO	USCI_B0 SPI slave in master out (direction controlled by USCI)	
	PM_UCB0SDA	USCI_B0 I^2C data (open drain and direction controlled by USCI)	
25	PM_UCB0CLK	USCI_B0 clock input/output (direction controlled by USCI)	
	PM_UCA0STE	USCI_A0 SPI slave transmit enable (direction controlled by USCI)	
26-30	Reserved	None	DVSS

Copyright © 2010–2020, Texas Instruments Incorporated

Table 6-6. Port Mapping Mnemonics and Functions (continued)

VALUE	PxMAPy MNEMONIC	INPUT PIN FUNCTION	OUTPUT PIN FUNCTION
31 (0FFh)(1)	PM_ANALOG	Disables the output driver as well as the input Schmitt-trigger to prevent parasitic cross currents when applying analog signals.	

(1) The value of the PM_ANALOG mnemonic is set to 0FFh. The port mapping registers are 5 bits wide, and the upper bits are ignored, which results in a read value of 31.

Table 6-7. Default Mapping

PIN	PxMAPy MNEMONIC	INPUT PIN FUNCTION	OUTPUT PIN FUNCTION
P4.0/P4MAP0	PM_UCB1STE/PM_UCA1CLK	USCI_B1 SPI slave transmit enable (direction controlled by USCI) USCI_A1 clock input/output (direction controlled by USCI)	
P4.1/P4MAP1	PM_UCB1SIMO/PM_UCB1SDA	USCI_B1 SPI slave in master out (direction controlled by USCI) USCI_B1 I^2C data (open drain and direction controlled by USCI)	
P4.2/P4MAP2	PM_UCB1SOMI/PM_UCB1SCL	USCI_B1 SPI slave out master in (direction controlled by USCI) USCI_B1 I^2C clock (open drain and direction controlled by USCI)	
P4.3/P4MAP3	PM_UCB1CLK/PM_UCA1STE	USCI_A1 SPI slave transmit enable (direction controlled by USCI) USCI_B1 clock input/output (direction controlled by USCI)	
P4.4/P4MAP4	PM_UCA1TXD/PM_UCA1SIMO	USCI_A1 UART TXD (Direction controlled by USCI – output) USCI_A1 SPI slave in master out (direction controlled by USCI)	
P4.5/P4MAP5	PM_UCA1RXD/PM_UCA1SOMI	USCI_A1 UART RXD (Direction controlled by USCI – input) USCI_A1 SPI slave out master in (direction controlled by USCI)	
P4.6/P4MAP6	PM_NONE	None	DVSS
P4.7/P4MAP7	PM_NONE	None	DVSS

6.9.3 Oscillator and System Clock (Link to User's Guide)

The clock system is supported by the Unified Clock System (UCS) module that includes support for a 32-kHz watch crystal oscillator (XT1 LF mode; XT1 HF mode not supported), an internal very low-power low-frequency oscillator (VLO), an internal trimmed low-frequency oscillator (REFO), an integrated internal digitally controlled oscillator (DCO), and a high-frequency crystal oscillator (XT2). The UCS module is designed to meet the requirements of both low system cost and low power consumption. The UCS module features digital frequency locked loop (FLL) hardware that, in conjunction with a digital modulator, stabilizes the DCO frequency to a programmable multiple of the selected FLL reference frequency. The internal DCO provides a fast turnon clock source and stabilizes in less than 5 µs. The UCS module provides the following clock signals:

- Auxiliary clock (ACLK), sourced from a 32 kHz watch crystal (XT1), a high-frequency crystal (XT2), the internal low-frequency oscillator (VLO), the trimmed low-frequency oscillator (REFO), or the internal digitally controlled oscillator (DCO).
- Main clock (MCLK), the system clock used by the CPU. MCLK can be sourced by same sources made available to ACLK.
- Sub-Main clock (SMCLK), the subsystem clock used by the peripheral modules. SMCLK can be sourced by same sources made available to ACLK.
- ACLK/n, the buffered output of ACLK, ACLK/2, ACLK/4, ACLK/8, ACLK/16, ACLK/32.

6.9.4 Power-Management Module (PMM) (Link to User's Guide)

The PMM includes an integrated voltage regulator that supplies the core voltage to the device and contains programmable output levels to provide for power optimization. The PMM also includes supply voltage supervisor (SVS) and supply voltage monitoring (SVM) circuitry, and brownout protection. The brownout circuit provides the proper internal reset signal to the device during power on and power off. The SVS and SVM circuitry detects if the supply voltage drops below a user-selectable level and supports both supply voltage supervision (the device is automatically reset) and supply voltage monitoring (the device is not automatically reset). SVS and SVM circuitry is available on the primary supply and core supply.

6.9.5 Hardware Multiplier (Link to User's Guide)

The multiplication operation is supported by a dedicated peripheral module. The module performs operations with 32-, 24-, 16-, and 8-bit operands. The module supports signed and unsigned multiplication as well as signed and unsigned multiply-and-accumulate operations.

6.9.6 Real-Time Clock (RTC_A) (Link to User's Guide)

The RTC_A module can be used as a general-purpose 32-bit counter (counter mode) or as an integrated real-time clock (RTC) (calendar mode). In counter mode, the RTC_A also includes two independent 8-bit timers that can be cascaded to form a 16-bit timer/counter. Both timers can be read and written by software. Calendar mode integrates an internal calendar which compensates for months with less than 31 days and includes leap year correction. The RTC_A also supports flexible alarm functions and offset-calibration hardware.

6.9.7 Watchdog Timer (WDT_A) (Link to User's Guide)

The primary function of the WDT_A module is to perform a controlled system restart after a software problem occurs. If the selected time interval expires, a system reset is generated. If the watchdog function is not needed in an application, the module can be configured as an interval timer and can generate interrupts at selected time intervals.

Copyright © 2010–2020, Texas Instruments Incorporated

6.9.8 System Module (SYS) (Link to User's Guide)

The SYS module handles many of the system functions within the device. These include power-on reset and power-up clear handling, NMI source selection and management, reset interrupt vector generators (see Table 6-8), bootloader entry mechanisms, and configuration management (device descriptors). The SYS module also includes a data exchange mechanism through JTAG called a JTAG mailbox that can be used in the application.

Table 6-8. System Module Interrupt Vector Registers

INTERRUPT VECTOR REGISTER	ADDRESS	INTERRUPT EVENT	VALUE	PRIORITY
SYSRSTIV, System Reset	019Eh	No interrupt pending	00h	
		Brownout (BOR)	02h	Highest
		$\overline{\text{RST}}$/NMI (POR)	04h	
		PMMSWBOR (BOR)	06h	
		Wake up from LPMx.5	08h	
		Security violation (BOR)	0Ah	
		SVSL (POR)	0Ch	
		SVSH (POR)	0Eh	
		SVML_OVP (POR)	10h	
		SVMH_OVP (POR)	12h	
		PMMSWPOR (POR)	14h	
		WDT time-out (PUC)	16h	
		WDT password violation (PUC)	18h	
		KEYV flash password violation (PUC)	1Ah	
		Reserved	1Ch	
		Peripheral area fetch (PUC)	1Eh	
		PMM password violation (PUC)	20h	
		Reserved	22h to 3Eh	Lowest
SYSSNIV, System NMI	019Ch	No interrupt pending	00h	
		SVMLIFG	02h	Highest
		SVMHIFG	04h	
		SVSMLDLYIFG	06h	
		SVSMHDLYIFG	08h	
		VMAIFG	0Ah	
		JMBINIFG	0Ch	
		JMBOUTIFG	0Eh	
		SVMLVLRIFG	10h	
		SVMHVLRIFG	12h	
		Reserved	14h to 1Eh	Lowest
SYSUNIV, User NMI	019Ah	No interrupt pending	00h	
		NMIIFG	02h	Highest
		OFIFG	04h	
		ACCVIFG	06h	
		Reserved	08h	
		Reserved	0Ah to 1Eh	Lowest

6.9.9 DMA Controller (Link to User's Guide)

The DMA controller allows movement of data from one memory address to another without CPU intervention. For example, the DMA controller can be used to move data from the ADC10_A conversion register to RAM. Using the DMA controller can increase the throughput of peripheral modules. The DMA controller reduces system power consumption by allowing the CPU to remain in sleep mode, without having to awaken to move data to or from a peripheral. Table 6-9 lists the triggers for DMA transfers.

Table 6-9. DMA Trigger Assignments (1)

TRIGGER	CHANNEL		
	0	1	2
0	DMAREQ	DMAREQ	DMAREQ
1	TA0CCR0 CCIFG	TA0CCR0 CCIFG	TA0CCR0 CCIFG
2	TA0CCR2 CCIFG	TA0CCR2 CCIFG	TA0CCR2 CCIFG
3	TA1CCR0 CCIFG	TA1CCR0 CCIFG	TA1CCR0 CCIFG
4	TA1CCR2 CCIFG	TA1CCR2 CCIFG	TA1CCR2 CCIFG
5	TA2CCR0 CCIFG	TA2CCR0 CCIFG	TA2CCR0 CCIFG
6	TA2CCR2 CCIFG	TA2CCR2 CCIFG	TA2CCR2 CCIFG
7	TB0CCR0 CCIFG	TB0CCR0 CCIFG	TB0CCR0 CCIFG
8	TB0CCR2 CCIFG	TB0CCR2 CCIFG	TB0CCR2 CCIFG
9	Reserved	Reserved	Reserved
10	Reserved	Reserved	Reserved
11	Reserved	Reserved	Reserved
12	Reserved	Reserved	Reserved
13	Reserved	Reserved	Reserved
14	Reserved	Reserved	Reserved
15	Reserved	Reserved	Reserved
16	UCA0RXIFG	UCA0RXIFG	UCA0RXIFG
17	UCA0TXIFG	UCA0TXIFG	UCA0TXIFG
18	UCB0RXIFG	UCB0RXIFG	UCB0RXIFG
19	UCB0TXIFG	UCB0TXIFG	UCB0TXIFG
20	UCA1RXIFG	UCA1RXIFG	UCA1RXIFG
21	UCA1TXIFG	UCA1TXIFG	UCA1TXIFG
22	UCB1RXIFG	UCB1RXIFG	UCB1RXIFG
23	UCB1TXIFG	UCB1TXIFG	UCB1TXIFG
24	ADC10IFG0 (2)	ADC10IFG0 (2)	ADC10IFG0 (2)
25	Reserved	Reserved	Reserved
26	Reserved	Reserved	Reserved
27	reserved	reserved	reserved
28	reserved	reserved	reserved
29	MPY ready	MPY ready	MPY ready
30	DMA2IFG	DMA0IFG	DMA1IFG
31	DMAE0	DMAE0	DMAE0

(1) If a reserved trigger source is selected, no trigger is generated.
(2) Only on devices with ADC. Reserved on devices without ADC.

Copyright © 2010–2020, Texas Instruments Incorporated

6.9.10 Universal Serial Communication Interface (USCI) (Links to User's Guide: UART Mode, SPI Mode, I²C Mode)

The USCI modules are used for serial data communication. The USCI module supports synchronous communication protocols such as SPI (3- or 4-pin) and I²C, and asynchronous communication protocols such as UART, enhanced UART with automatic baud-rate detection, and IrDA. Each USCI module contains two portions, A and B.

The USCI_An module provides support for SPI (3- or 4-pin), UART, enhanced UART, or IrDA.

The USCI_Bn module provides support for SPI (3- or 4-pin) or I²C.

The MSP430F53xx series includes one or two complete USCI modules.

6.9.11 TA0 (Link to User's Guide)

TA0 is a 16-bit timer/counter (Timer_A type) with five capture/compare registers. TA0 can support multiple capture/compares, PWM outputs, and interval timing (see Table 6-10). TA0 also has extensive interrupt capabilities. Interrupts may be generated from the counter on overflow conditions and from each of the capture/compare registers.

Table 6-10. TA0 Signal Connections

INPUT PIN NUMBER		DEVICE INPUT SIGNAL	MODULE INPUT SIGNAL	MODULE BLOCK	MODULE OUTPUT SIGNAL	DEVICE OUTPUT SIGNAL	OUTPUT PIN NUMBER	
RGC, ZXH, ZQE	RGZ, PT						RGC, ZXH, ZQE	RGZ, PT
18, H2-P1.0	14-P1.0	TA0CLK	TACLK	Timer	NA	NA		
		ACLK (internal)	ACLK					
		SMCLK (internal)	SMCLK					
18, H2-P1.0	14-P1.0	TA0CLK	$\overline{\text{TACLK}}$					
19, H3-P1.1	15-P1.1	TA0.0	CCI0A	CCR0	TA0	TA0.0	19, H3-P1.1	15-P1.1
		DV_{SS}	CCI0B					
		DV_{SS}	GND					
		DV_{CC}	V_{CC}					
20, J3-P1.2	16-P1.2	TA0.1	CCI1A	CCR1	TA1	TA0.1	20, J3-P1.2	16-P1.2
		CBOUT (internal)	CCI1B				ADC10 (internal) (1) ADC10SHSx = {1}	ADC10 (internal) (1) ADC10SHSx = {1}
		DV_{SS}	GND					
		DV_{CC}	V_{CC}					
21, G4-P1.3	17-P1.3	TA0.2	CCI2A	CCR2	TA2	TA0.2	21, G4-P1.3	17-P1.3
		ACLK (internal)	CCI2B					
		DV_{SS}	GND					
		DV_{CC}	V_{CC}					
22, H4-P1.4	18-P1.4	TA0.3	CCI3A	CCR3	TA3	TA0.3	22, H4-P1.4	18-P1.4
		DV_{SS}	CCI3B					
		DV_{SS}	GND					
		DV_{CC}	V_{CC}					
23, J4-P1.5	19-P1.5	TA0.4	CCI4A	CCR4	TA4	TA0.4	23, J4-P1.5	19-P1.5
		DV_{SS}	CCI4B					
		DV_{SS}	GND					
		DV_{CC}	V_{CC}					

(1) Only on devices with ADC.

6.9.12 TA1 (Link to User's Guide)

TA1 is a 16-bit timer/counter (Timer_A type) with three capture/compare registers. TA1 can support multiple capture/compares, PWM outputs, and interval timing (see Table 6-11). TA1 also has extensive interrupt capabilities. Interrupts may be generated from the counter on overflow conditions and from each of the capture/compare registers.

Table 6-11. TA1 Signal Connections

INPUT PIN NUMBER		DEVICE INPUT SIGNAL	MODULE INPUT SIGNAL	MODULE BLOCK	MODULE OUTPUT SIGNAL	DEVICE OUTPUT SIGNAL	OUTPUT PIN NUMBER	
RGC, ZXH, ZQE	RGZ, PT						RGC, ZXH, ZQE	RGZ, PT
24, G5-P1.6	20-P1.6	TA1CLK	TACLK	Timer	NA	NA		
		ACLK (internal)	ACLK					
		SMCLK (internal)	SMCLK					
24, G5-P1.6	20-P1.6	TA1CLK	$\overline{\text{TACLK}}$					
25, H5-P1.7	21-P1.7	TA1.0	CCI0A	CCR0	TA0	TA1.0	25, H5-P1.7	21-P1.7
		DV_{SS}	CCI0B					
		DV_{SS}	GND					
		DV_{CC}	V_{CC}					
26, J5-P2.0	22-P2.0	TA1.1	CCI1A	CCR1	TA1	TA1.1	26, J5-P2.0	22-P2.0
		CBOUT (internal)	CCI1B					
		DV_{SS}	GND					
		DV_{CC}	V_{CC}					
27, G6-P2.1		TA1.2	CCI2A	CCR2	TA2	TA1.2	27, G6-P2.1	
		ACLK (internal)	CCI2B					
		DV_{SS}	GND					
		DV_{CC}	V_{CC}					

Copyright © 2010–2020, Texas Instruments Incorporated

6.9.13 TA2 (Link to User's Guide)

TA2 is a 16-bit timer/counter (Timer_A type) with three capture/compare registers. TA2 can support multiple capture/compares, PWM outputs, and interval timing (see Table 6-12). TA2 also has extensive interrupt capabilities. Interrupts may be generated from the counter on overflow conditions and from each of the capture/compare registers.

Table 6-12. TA2 Signal Connections

INPUT PIN NUMBER		DEVICE INPUT SIGNAL	MODULE INPUT SIGNAL	MODULE BLOCK	MODULE OUTPUT SIGNAL	DEVICE OUTPUT SIGNAL	OUTPUT PIN NUMBER	
RGC, ZXH, ZQE	RGZ, PT						RGC, ZXH, ZQE	RGZ, PT
28, J6-P2.2		TA2CLK	TACLK	Timer	NA	NA		
		ACLK (internal)	ACLK					
		SMCLK (internal)	SMCLK					
28, J6-P2.2		TA2CLK	$\overline{\text{TACLK}}$					
29, H6-P2.3		TA2.0	CCI0A	CCR0	TA0	TA2.0	29, H6-P2.3	
		DV_{SS}	CCI0B					
		DV_{SS}	GND					
		DV_{CC}	V_{CC}					
30, J7-P2.4		TA2.1	CCI1A	CCR1	TA1	TA2.1	30, J7-P2.4	
		CBOUT (internal)	CCI1B					
		DV_{SS}	GND					
		DV_{CC}	V_{CC}					
31, J8-P2.5		TA2.2	CCI2A	CCR2	TA2	TA2.2	31, J8-P2.5	
		ACLK (internal)	CCI2B					
		DV_{SS}	GND					
		DV_{CC}	V_{CC}					

6.9.14 TB0 (Link to User's Guide)

TB0 is a 16-bit timer/counter (Timer_B type) with seven capture/compare registers. TB0 can support multiple capture/compares, PWM outputs, and interval timing (see Table 6-13). TB0 also has extensive interrupt capabilities. Interrupts may be generated from the counter on overflow conditions and from each of the capture/compare registers.

Table 6-13. TB0 Signal Connections

INPUT PIN NUMBER		DEVICE INPUT SIGNAL	MODULE INPUT SIGNAL	MODULE BLOCK	MODULE OUTPUT SIGNAL	DEVICE OUTPUT SIGNAL	OUTPUT PIN NUMBER	
RGC, ZXH, ZQE (1)	RGZ, PT (1)						RGC, ZXH, ZQE (1)	RGZ, PT (1)
		TB0CLK	TBCLK	Timer	NA	NA		
		ACLK (internal)	ACLK					
		SMCLK (internal)	SMCLK					
		TB0CLK	$\overline{\text{TBCLK}}$					
		TB0.0	CCI0A	CCR0	TB0	TB0.0	ADC10 (internal) (2) ADC10SHSx = {2}	ADC10 (internal) (2) ADC10SHSx = {2}
		TB0.0	CCI0B					
		DV_{SS}	GND					
		DV_{CC}	V_{CC}					
		TB0.1	CCI1A	CCR1	TB1	TB0.1	ADC10 (internal) ADC10SHSx = {3}	ADC10 (internal) ADC10SHSx = {3}
		CBOUT (internal)	CCI1B					
		DV_{SS}	GND					
		DV_{CC}	V_{CC}					
		TB0.2	CCI2A	CCR2	TB2	TB0.2		
		TB0.2	CCI2B					
		DV_{SS}	GND					
		DV_{CC}	V_{CC}					
		TB0.3	CCI3A	CCR3	TB3	TB0.3		
		TB0.3	CCI3B					
		DV_{SS}	GND					
		DV_{CC}	V_{CC}					
		TB0.4	CCI4A	CCR4	TB4	TB0.4		
		TB0.4	CCI4B					
		DV_{SS}	GND					
		DV_{CC}	V_{CC}					
		TB0.5	CCI5A	CCR5	TB5	TB0.5		
		TB0.5	CCI5B					
		DV_{SS}	GND					
		DV_{CC}	V_{CC}					
		TB0.6	CCI6A	CCR6	TB6	TB0.6		
		ACLK (internal)	CCI6B					
		DV_{SS}	GND					
		DV_{CC}	V_{CC}					

(1) Timer functions selectable by the port mapping controller.
(2) Only on devices with ADC.

Copyright © 2010–2020, Texas Instruments Incorporated

6.9.15 Comparator_B (Link to User's Guide)

The primary function of the Comparator_B module is to support precision slope analog-to-digital conversions, battery voltage supervision, and monitoring of external analog signals.

6.9.16 ADC10_A (Link to User's Guide)

The ADC10_A module supports fast 10-bit analog-to-digital conversions. The module implements a 10-bit SAR core, sample select control, reference generator, and a conversion result buffer. A window comparator with lower and upper limits allows CPU-independent result monitoring with three window comparator interrupt flags.

6.9.17 CRC16 (Link to User's Guide)

The CRC16 module produces a signature based on a sequence of entered data values and can be used for data checking purposes. The CRC16 module signature is based on the CRC-CCITT standard.

6.9.18 Reference (REF) Module Voltage Reference (Link to User's Guide)

The REF generates all critical reference voltages that can be used by the various analog peripherals in the device.

6.9.19 LDO and Port U

The integrated 3.3-V power system incorporates an integrated 3.3-V LDO regulator that allows the entire microcontroller to be powered from nominal 5-V LDOI when it is made available for the system. Alternatively, the power system can supply power only to other components within the system, or it can be unused altogether. The Port U Pins (PU.0 and PU.1) function as general-purpose high-current I/O pins. These pins must be configured together as either both inputs or both outputs. Port U is supplied by the LDOO rail. If the 3.3-V LDO is not being used in the system (disabled), the LDOO pin can be supplied externally.

6.9.20 Embedded Emulation Module (EEM) (S Version) (Link to User's Guide)

The EEM supports real-time in-system debugging. The S version of the EEM has the following features:

- Three hardware triggers or breakpoints on memory access
- One hardware trigger or breakpoint on CPU register write access
- Up to four hardware triggers can be combined to form complex triggers or breakpoints
- One cycle counter
- Clock control on module level

6.10 Peripheral File Map

Table 6-14 lists the register base address for all supported peripherals.

Table 6-14. Peripherals

MODULE NAME	BASE ADDRESS	OFFSET ADDRESS RANGE
Special Functions (see Table 6-15)	0100h	000h to 01Fh
PMM (see Table 6-16)	0120h	000h to 01Fh
Flash Control (see Table 6-17)	0140h	000h to 00Fh
CRC16 (see Table 6-18)	0150h	000h to 007h
RAM Control (see Table 6-19)	0158h	000h to 001h
Watchdog (see Table 6-20)	015Ch	000h to 001h
UCS (see Table 6-21)	0160h	000h to 01Fh
SYS (see Table 6-22)	0180h	000h to 01Fh
Shared Reference (see Table 6-23)	01B0h	000h to 001h
Port Mapping Control (see Table 6-24)	01C0h	000h to 002h
Port Mapping Port P4 (see Table 6-24)	01E0h	000h to 007h
Port P1, P2 (see Table 6-25)	0200h	000h to 01Fh
Port P3, P4 (see Table 6-26)	0220h	000h to 00Bh
Port P5, P6 (see Table 6-27)	0240h	000h to 00Bh
Port PJ (see Table 6-28)	0320h	000h to 01Fh
TA0 (see Table 6-29)	0340h	000h to 02Eh
TA1 (see Table 6-30)	0380h	000h to 02Eh
TB0 (see Table 6-31)	03C0h	000h to 02Eh
TA2 (see Table 6-32)	0400h	000h to 02Eh
Real-Time Clock (RTC_A) (see Table 6-33)	04A0h	000h to 01Bh
32-Bit Hardware Multiplier (see Table 6-34)	04C0h	000h to 02Fh
DMA General Control (see Table 6-35)	0500h	000h to 00Fh
DMA Channel 0 (see Table 6-35)	0510h	000h to 00Ah
DMA Channel 1 (see Table 6-35)	0520h	000h to 00Ah
DMA Channel 2 (see Table 6-35)	0530h	000h to 00Ah
USCI_A0 (see Table 6-36)	05C0h	000h to 01Fh
USCI_B0 (see Table 6-37)	05E0h	000h to 01Fh
USCI_A1 (see Table 6-38)	0600h	000h to 01Fh
USCI_B1 (see Table 6-39)	0620h	000h to 01Fh
ADC10_A (see Table 6-40)	0740h	000h to 01Fh
Comparator_B (see Table 6-41)	08C0h	000h to 00Fh
LDO-PWR and Port U Configuration (see Table 6-42)	0900h	000h to 014h

Copyright © 2010–2020, Texas Instruments Incorporated

Table 6-15. Special Function Registers (Base Address: 0100h)

REGISTER DESCRIPTION	REGISTER	OFFSET
SFR interrupt enable	SFRIE1	00h
SFR interrupt flag	SFRIFG1	02h
SFR reset pin control	SFRRPCR	04h

Table 6-16. PMM Registers (Base Address: 0120h)

REGISTER DESCRIPTION	REGISTER	OFFSET
PMM control 0	PMMCTL0	00h
PMM control 1	PMMCTL1	02h
SVS high-side control	SVSMHCTL	04h
SVS low-side control	SVSMLCTL	06h
PMM interrupt flags	PMMIFG	0Ch
PMM interrupt enable	PMMIE	0Eh
PMM power mode 5 control	PM5CTL0	10h

Table 6-17. Flash Control Registers (Base Address: 0140h)

REGISTER DESCRIPTION	REGISTER	OFFSET
Flash control 1	FCTL1	00h
Flash control 3	FCTL3	04h
Flash control 4	FCTL4	06h

Table 6-18. CRC16 Registers (Base Address: 0150h)

REGISTER DESCRIPTION	REGISTER	OFFSET
CRC data input	CRC16DI	00h
CRC data input reverse byte	CRCDIRB	02h
CRC initialization and result	CRCINIRES	04h
CRC result reverse byte	CRCRESR	06h

Table 6-19. RAM Control Registers (Base Address: 0158h)

REGISTER DESCRIPTION	REGISTER	OFFSET
RAM control 0	RCCTL0	00h

Table 6-20. Watchdog Registers (Base Address: 015Ch)

REGISTER DESCRIPTION	REGISTER	OFFSET
Watchdog timer control	WDTCTL	00h

Table 6-21. UCS Registers (Base Address: 0160h)

REGISTER DESCRIPTION	REGISTER	OFFSET
UCS control 0	UCSCTL0	00h
UCS control 1	UCSCTL1	02h
UCS control 2	UCSCTL2	04h
UCS control 3	UCSCTL3	06h
UCS control 4	UCSCTL4	08h
UCS control 5	UCSCTL5	0Ah
UCS control 6	UCSCTL6	0Ch
UCS control 7	UCSCTL7	0Eh

Copyright © 2010–2020, Texas Instruments Incorporated

Table 6-21. UCS Registers (Base Address: 0160h) (continued)

REGISTER DESCRIPTION	REGISTER	OFFSET
UCS control 8	UCSCTL8	10h

Table 6-22. SYS Registers (Base Address: 0180h)

REGISTER DESCRIPTION	REGISTER	OFFSET
System control	SYSCTL	00h
Bootloader configuration area	SYSBSLC	02h
JTAG mailbox control	SYSJMBC	06h
JTAG mailbox input 0	SYSJMBI0	08h
JTAG mailbox input 1	SYSJMBI1	0Ah
JTAG mailbox output 0	SYSJMBO0	0Ch
JTAG mailbox output 1	SYSJMBO1	0Eh
Bus error vector generator	SYSBERRIV	18h
User NMI vector generator	SYSUNIV	1Ah
System NMI vector generator	SYSSNIV	1Ch
Reset vector generator	SYSRSTIV	1Eh

Table 6-23. Shared Reference Registers (Base Address: 01B0h)

REGISTER DESCRIPTION	REGISTER	OFFSET
Shared reference control	REFCTL	00h

Table 6-24. Port Mapping Registers (Base Address of Port Mapping Control: 01C0h, Port P4: 01E0h)

REGISTER DESCRIPTION	REGISTER	OFFSET
Port mapping password	PMAPPWD	00h
Port mapping control	PMAPCTL	02h
Port P4.0 mapping	P4MAP0	00h
Port P4.1 mapping	P4MAP1	01h
Port P4.2 mapping	P4MAP2	02h
Port P4.3 mapping	P4MAP3	03h
Port P4.4 mapping	P4MAP4	04h
Port P4.5 mapping	P4MAP5	05h
Port P4.6 mapping	P4MAP6	06h
Port P4.7 mapping	P4MAP7	07h

Copyright © 2010–2020, Texas Instruments Incorporated

Table 6-25. Port P1, P2 Registers (Base Address: 0200h)

REGISTER DESCRIPTION	REGISTER	OFFSET
Port P1 input	P1IN	00h
Port P1 output	P1OUT	02h
Port P1 direction	P1DIR	04h
Port P1 resistor enable	P1REN	06h
Port P1 drive strength	P1DS	08h
Port P1 selection	P1SEL	0Ah
Port P1 interrupt vector word	P1IV	0Eh
Port P1 interrupt edge select	P1IES	18h
Port P1 interrupt enable	P1IE	1Ah
Port P1 interrupt flag	P1IFG	1Ch
Port P2 input	P2IN	01h
Port P2 output	P2OUT	03h
Port P2 direction	P2DIR	05h
Port P2 resistor enable	P2REN	07h
Port P2 drive strength	P2DS	09h
Port P2 selection	P2SEL	0Bh
Port P2 interrupt vector word	P2IV	1Eh
Port P2 interrupt edge select	P2IES	19h
Port P2 interrupt enable	P2IE	1Bh
Port P2 interrupt flag	P2IFG	1Dh

Table 6-26. Port P3, P4 Registers (Base Address: 0220h)

REGISTER DESCRIPTION	REGISTER	OFFSET
Port P3 input	P3IN	00h
Port P3 output	P3OUT	02h
Port P3 direction	P3DIR	04h
Port P3 resistor enable	P3REN	06h
Port P3 drive strength	P3DS	08h
Port P3 selection	P3SEL	0Ah
Port P4 input	P4IN	01h
Port P4 output	P4OUT	03h
Port P4 direction	P4DIR	05h
Port P4 resistor enable	P4REN	07h
Port P4 drive strength	P4DS	09h
Port P4 selection	P4SEL	0Bh

Copyright © 2010–2020, Texas Instruments Incorporated

Table 6-27. Port P5, P6 Registers (Base Address: 0240h)

REGISTER DESCRIPTION	REGISTER	OFFSET
Port P5 input	P5IN	00h
Port P5 output	P5OUT	02h
Port P5 direction	P5DIR	04h
Port P5 resistor enable	P5REN	06h
Port P5 drive strength	P5DS	08h
Port P5 selection	P5SEL	0Ah
Port P6 input	P6IN	01h
Port P6 output	P6OUT	03h
Port P6 direction	P6DIR	05h
Port P6 resistor enable	P6REN	07h
Port P6 drive strength	P6DS	09h
Port P6 selection	P6SEL	0Bh

Table 6-28. Port J Registers (Base Address: 0320h)

REGISTER DESCRIPTION	REGISTER	OFFSET
Port PJ input	PJIN	00h
Port PJ output	PJOUT	02h
Port PJ direction	PJDIR	04h
Port PJ resistor enable	PJREN	06h
Port PJ drive strength	PJDS	08h

Table 6-29. TA0 Registers (Base Address: 0340h)

REGISTER DESCRIPTION	REGISTER	OFFSET
TA0 control	TA0CTL	00h
Capture/compare control 0	TA0CCTL0	02h
Capture/compare control 1	TA0CCTL1	04h
Capture/compare control 2	TA0CCTL2	06h
Capture/compare control 3	TA0CCTL3	08h
Capture/compare control 4	TA0CCTL4	0Ah
TA0 counter	TA0R	10h
Capture/compare 0	TA0CCR0	12h
Capture/compare 1	TA0CCR1	14h
Capture/compare 2	TA0CCR2	16h
Capture/compare 3	TA0CCR3	18h
Capture/compare 4	TA0CCR4	1Ah
TA0 expansion 0	TA0EX0	20h
TA0 interrupt vector	TA0IV	2Eh

Copyright © 2010–2020, Texas Instruments Incorporated

Table 6-30. TA1 Registers (Base Address: 0380h)

REGISTER DESCRIPTION	REGISTER	OFFSET
TA1 control	TA1CTL	00h
Capture/compare control 0	TA1CCTL0	02h
Capture/compare control 1	TA1CCTL1	04h
Capture/compare control 2	TA1CCTL2	06h
TA1 counter	TA1R	10h
Capture/compare 0	TA1CCR0	12h
Capture/compare 1	TA1CCR1	14h
Capture/compare 2	TA1CCR2	16h
TA1 expansion 0	TA1EX0	20h
TA1 interrupt vector	TA1IV	2Eh

Table 6-31. TB0 Registers (Base Address: 03C0h)

REGISTER DESCRIPTION	REGISTER	OFFSET
TB0 control	TB0CTL	00h
Capture/compare control 0	TB0CCTL0	02h
Capture/compare control 1	TB0CCTL1	04h
Capture/compare control 2	TB0CCTL2	06h
Capture/compare control 3	TB0CCTL3	08h
Capture/compare control 4	TB0CCTL4	0Ah
Capture/compare control 5	TB0CCTL5	0Ch
Capture/compare control 6	TB0CCTL6	0Eh
TB0 counter	TB0R	10h
Capture/compare 0	TB0CCR0	12h
Capture/compare 1	TB0CCR1	14h
Capture/compare 2	TB0CCR2	16h
Capture/compare 3	TB0CCR3	18h
Capture/compare 4	TB0CCR4	1Ah
Capture/compare 5	TB0CCR5	1Ch
Capture/compare 6	TB0CCR6	1Eh
TB0 expansion 0	TB0EX0	20h
TB0 interrupt vector	TB0IV	2Eh

Table 6-32. TA2 Registers (Base Address: 0400h)

REGISTER DESCRIPTION	REGISTER	OFFSET
TA2 control	TA2CTL	00h
Capture/compare control 0	TA2CCTL0	02h
Capture/compare control 1	TA2CCTL1	04h
Capture/compare control 2	TA2CCTL2	06h
TA2 counter	TA2R	10h
Capture/compare 0	TA2CCR0	12h
Capture/compare 1	TA2CCR1	14h
Capture/compare 2	TA2CCR2	16h
TA2 expansion 0	TA2EX0	20h
TA2 interrupt vector	TA2IV	2Eh

Copyright © 2010–2020, Texas Instruments Incorporated

Table 6-33. Real-Time Clock Registers (Base Address: 04A0h)

REGISTER DESCRIPTION	REGISTER	OFFSET
RTC control 0	RTCCTL0	00h
RTC control 1	RTCCTL1	01h
RTC control 2	RTCCTL2	02h
RTC control 3	RTCCTL3	03h
RTC prescaler 0 control	RTCPS0CTL	08h
RTC prescaler 1 control	RTCPS1CTL	0Ah
RTC prescaler 0	RTCPS0	0Ch
RTC prescaler 1	RTCPS1	0Dh
RTC interrupt vector word	RTCIV	0Eh
RTC seconds/counter 1	RTCSEC/RTCNT1	10h
RTC minutes/counter 2	RTCMIN/RTCNT2	11h
RTC hours/counter 3	RTCHOUR/RTCNT3	12h
RTC day of week/counter 4	RTCDOW/RTCNT4	13h
RTC days	RTCDAY	14h
RTC month	RTCMON	15h
RTC year low	RTCYEARL	16h
RTC year high	RTCYEARH	17h
RTC alarm minutes	RTCAMIN	18h
RTC alarm hours	RTCAHOUR	19h
RTC alarm day of week	RTCADOW	1Ah
RTC alarm days	RTCADAY	1Bh

Copyright © 2010–2020, Texas Instruments Incorporated

Table 6-34. 32-Bit Hardware Multiplier Registers (Base Address: 04C0h)

REGISTER DESCRIPTION	REGISTER	OFFSET
16-bit operand 1 – multiply	MPY	00h
16-bit operand 1 – signed multiply	MPYS	02h
16-bit operand 1 – multiply accumulate	MAC	04h
16-bit operand 1 – signed multiply accumulate	MACS	06h
16-bit operand 2	OP2	08h
16 × 16 result low word	RESLO	0Ah
16 × 16 result high word	RESHI	0Ch
16 × 16 sum extension	SUMEXT	0Eh
32-bit operand 1 – multiply low word	MPY32L	10h
32-bit operand 1 – multiply high word	MPY32H	12h
32-bit operand 1 – signed multiply low word	MPYS32L	14h
32-bit operand 1 – signed multiply high word	MPYS32H	16h
32-bit operand 1 – multiply accumulate low word	MAC32L	18h
32-bit operand 1 – multiply accumulate high word	MAC32H	1Ah
32-bit operand 1 – signed multiply accumulate low word	MACS32L	1Ch
32-bit operand 1 – signed multiply accumulate high word	MACS32H	1Eh
32-bit operand 2 – low word	OP2L	20h
32-bit operand 2 – high word	OP2H	22h
32 × 32 result 0 – least significant word	RES0	24h
32 × 32 result 1	RES1	26h
32 × 32 result 2	RES2	28h
32 × 32 result 3 – most significant word	RES3	2Ah
MPY32 control 0	MPY32CTL0	2Ch

Table 6-35. DMA Registers (Base Address DMA General Control: 0500h, DMA Channel 0: 0510h, DMA Channel 1: 0520h, DMA Channel 2: 0530h)

REGISTER DESCRIPTION	REGISTER	OFFSET
DMA channel 0 control	DMA0CTL	00h
DMA channel 0 source address low	DMA0SAL	02h
DMA channel 0 source address high	DMA0SAH	04h
DMA channel 0 destination address low	DMA0DAL	06h
DMA channel 0 destination address high	DMA0DAH	08h
DMA channel 0 transfer size	DMA0SZ	0Ah
DMA channel 1 control	DMA1CTL	00h
DMA channel 1 source address low	DMA1SAL	02h
DMA channel 1 source address high	DMA1SAH	04h
DMA channel 1 destination address low	DMA1DAL	06h
DMA channel 1 destination address high	DMA1DAH	08h
DMA channel 1 transfer size	DMA1SZ	0Ah
DMA channel 2 control	DMA2CTL	00h
DMA channel 2 source address low	DMA2SAL	02h
DMA channel 2 source address high	DMA2SAH	04h
DMA channel 2 destination address low	DMA2DAL	06h
DMA channel 2 destination address high	DMA2DAH	08h
DMA channel 2 transfer size	DMA2SZ	0Ah
DMA module control 0	DMACTL0	00h
DMA module control 1	DMACTL1	02h
DMA module control 2	DMACTL2	04h
DMA module control 3	DMACTL3	06h
DMA module control 4	DMACTL4	08h
DMA interrupt vector	DMAIV	0Ah

Table 6-36. USCI_A0 Registers (Base Address: 05C0h)

REGISTER DESCRIPTION	REGISTER	OFFSET
USCI control 1	UCA0CTL1	00h
USCI control 0	UCA0CTL0	01h
USCI baud rate 0	UCA0BR0	06h
USCI baud rate 1	UCA0BR1	07h
USCI modulation control	UCA0MCTL	08h
USCI status	UCA0STAT	0Ah
USCI receive buffer	UCA0RXBUF	0Ch
USCI transmit buffer	UCA0TXBUF	0Eh
USCI LIN control	UCA0ABCTL	10h
USCI IrDA transmit control	UCA0IRTCTL	12h
USCI IrDA receive control	UCA0IRRCTL	13h
USCI interrupt enable	UCA0IE	1Ch
USCI interrupt flags	UCA0IFG	1Dh
USCI interrupt vector word	UCA0IV	1Eh

Copyright © 2010–2020, Texas Instruments Incorporated

Table 6-37. USCI_B0 Registers (Base Address: 05E0h)

REGISTER DESCRIPTION	REGISTER	OFFSET
USCI synchronous control 1	UCB0CTL1	00h
USCI synchronous control 0	UCB0CTL0	01h
USCI synchronous bit rate 0	UCB0BR0	06h
USCI synchronous bit rate 1	UCB0BR1	07h
USCI synchronous status	UCB0STAT	0Ah
USCI synchronous receive buffer	UCB0RXBUF	0Ch
USCI synchronous transmit buffer	UCB0TXBUF	0Eh
USCI I2C own address	UCB0I2COA	10h
USCI I2C slave address	UCB0I2CSA	12h
USCI interrupt enable	UCB0IE	1Ch
USCI interrupt flags	UCB0IFG	1Dh
USCI interrupt vector word	UCB0IV	1Eh

Table 6-38. USCI_A1 Registers (Base Address: 0600h)

REGISTER DESCRIPTION	REGISTER	OFFSET
USCI control 1	UCA1CTL1	00h
USCI control 0	UCA1CTL0	01h
USCI baud rate 0	UCA1BR0	06h
USCI baud rate 1	UCA1BR1	07h
USCI modulation control	UCA1MCTL	08h
USCI status	UCA1STAT	0Ah
USCI receive buffer	UCA1RXBUF	0Ch
USCI transmit buffer	UCA1TXBUF	0Eh
USCI LIN control	UCA1ABCTL	10h
USCI IrDA transmit control	UCA1IRTCTL	12h
USCI IrDA receive control	UCA1IRRCTL	13h
USCI interrupt enable	UCA1IE	1Ch
USCI interrupt flags	UCA1IFG	1Dh
USCI interrupt vector word	UCA1IV	1Eh

Table 6-39. USCI_B1 Registers (Base Address: 0620h)

REGISTER DESCRIPTION	REGISTER	OFFSET
USCI synchronous control 1	UCB1CTL1	00h
USCI synchronous control 0	UCB1CTL0	01h
USCI synchronous bit rate 0	UCB1BR0	06h
USCI synchronous bit rate 1	UCB1BR1	07h
USCI synchronous status	UCB1STAT	0Ah
USCI synchronous receive buffer	UCB1RXBUF	0Ch
USCI synchronous transmit buffer	UCB1TXBUF	0Eh
USCI I2C own address	UCB1I2COA	10h
USCI I2C slave address	UCB1I2CSA	12h
USCI interrupt enable	UCB1IE	1Ch
USCI interrupt flags	UCB1IFG	1Dh
USCI interrupt vector word	UCB1IV	1Eh

Copyright © 2010–2020, Texas Instruments Incorporated

Table 6-40. ADC10_A Registers (Base Address: 0740h)

REGISTER DESCRIPTION	REGISTER	OFFSET
ADC10_A control 0	ADC10CTL0	00h
ADC10_A control 1	ADC10CTL1	02h
ADC10_A control 2	ADC10CTL2	04h
ADC10_A window comparator low threshold	ADC10LO	06h
ADC10_A window comparator high threshold	ADC10HI	08h
ADC10_A memory control 0	ADC10MCTL0	0Ah
ADC10_A conversion memory	ADC10MEM0	12h
ADC10_A interrupt enable	ADC10IE	1Ah
ADC10_A interrupt flags	ADC10IGH	1Ch
ADC10_A interrupt vector word	ADC10IV	1Eh

Table 6-41. Comparator_B Registers (Base Address: 08C0h)

REGISTER DESCRIPTION	REGISTER	OFFSET
Comp_B control 0	CBCTL0	00h
Comp_B control 1	CBCTL1	02h
Comp_B control 2	CBCTL2	04h
Comp_B control 3	CBCTL3	06h
Comp_B interrupt	CBINT	0Ch
Comp_B interrupt vector word	CBIV	0Eh

Table 6-42. LDO and Port U Configuration Registers (Base Address: 0900h)

REGISTER DESCRIPTION	REGISTER	OFFSET
LDO key/ID	LDOKEYPID	00h
PU port control	PUCTL	04h
LDO power control	LDOPWRCTL	08h

Copyright © 2010–2020, Texas Instruments Incorporated

6.11 Input/Output Diagrams

6.11.1 Port P1 (P1.0 to P1.7) Input/Output With Schmitt Trigger

Figure 6-2 shows the port diagram. Table 6-43 summarizes the selection of the pin functions.

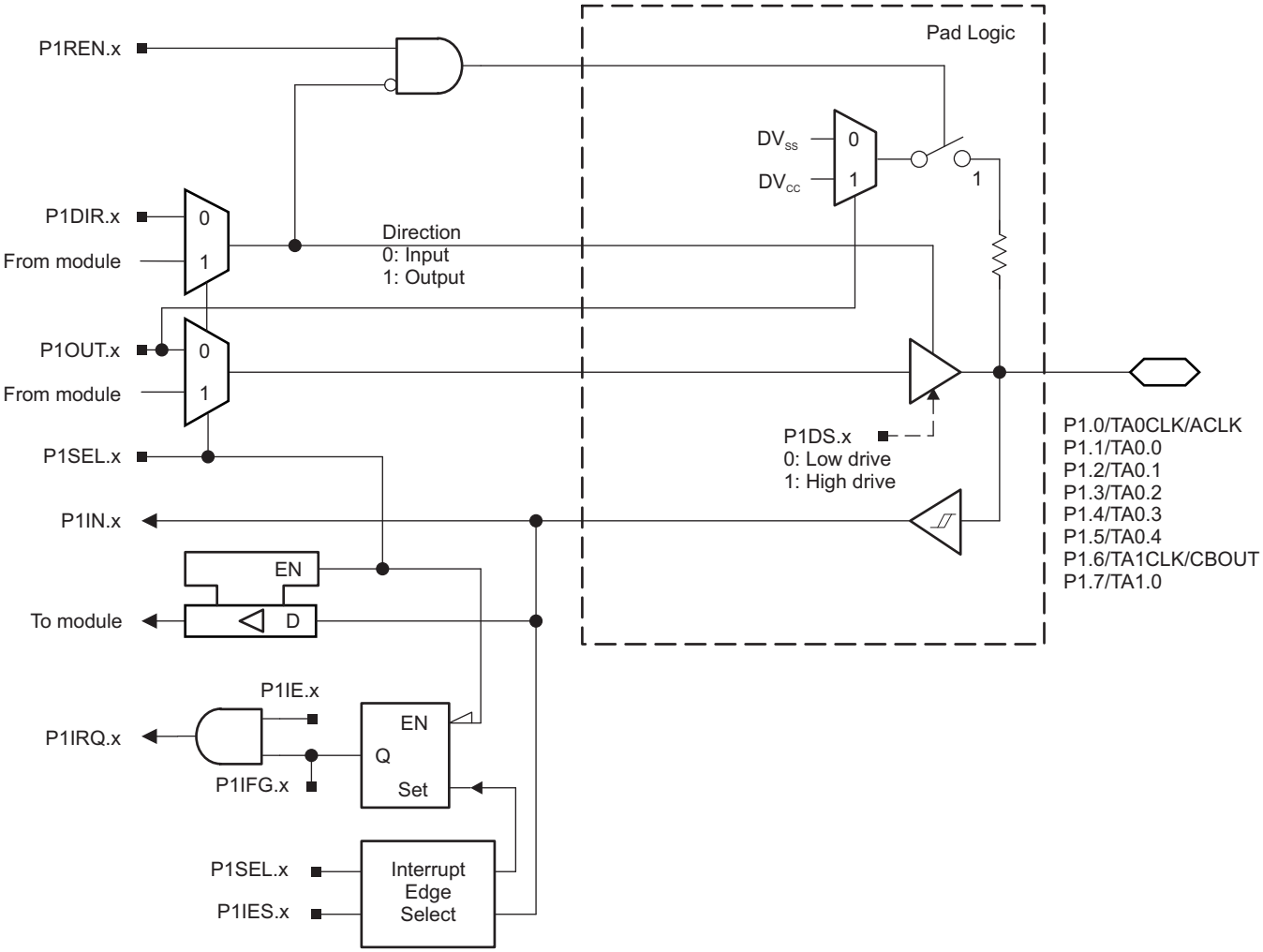

Figure 6-2. Port P1 (P1.0 to P1.7) Diagram

Table 6-43. Port P1 (P1.0 to P1.7) Pin Functions

PIN NAME (P1.x)	x	FUNCTION	CONTROL BITS OR SIGNALS	
			P1DIR.x	P1SEL.x
P1.0/TA0CLK/ACLK	0	P1.0 (I/O)	I: 0; O: 1	0
		TA0CLK	0	1
		ACLK	1	1
P1.1/TA0.0	1	P1.1 (I/O)	I: 0; O: 1	0
		TA0.CCI0A	0	1
		TA0.0	1	1
P1.2/TA0.1	2	P1.2 (I/O)	I: 0; O: 1	0
		TA0.CCI1A	0	1
		TA0.1	1	1
P1.3/TA0.2	3	P1.3 (I/O)	I: 0; O: 1	0
		TA0.CCI2A	0	1
		TA0.2	1	1
P1.4/TA0.3	4	P1.4 (I/O)	I: 0; O: 1	0
		TA0.CCI3A	0	1
		TA0.3	1	1
P1.5/TA0.4	5	P1.5 (I/O)	I: 0; O: 1	0
		TA0.CCI4A	0	1
		TA0.4	1	1
P1.6/TA1CLK/CBOUT	6	P1.6 (I/O)	I: 0; O: 1	0
		TA1CLK	0	1
		CBOUT comparator B	1	1
P1.7/TA1.0	7	P1.7 (I/O)	I: 0; O: 1	0
		TA1.CCI0A	0	1
		TA1.0	1	1

Copyright © 2010–2020, Texas Instruments Incorporated

6.11.2 Port P2 (P2.0 to P2.7) Input/Output With Schmitt Trigger

Figure 6-3 shows the port diagram. Table 6-44 summarizes the selection of the pin functions.

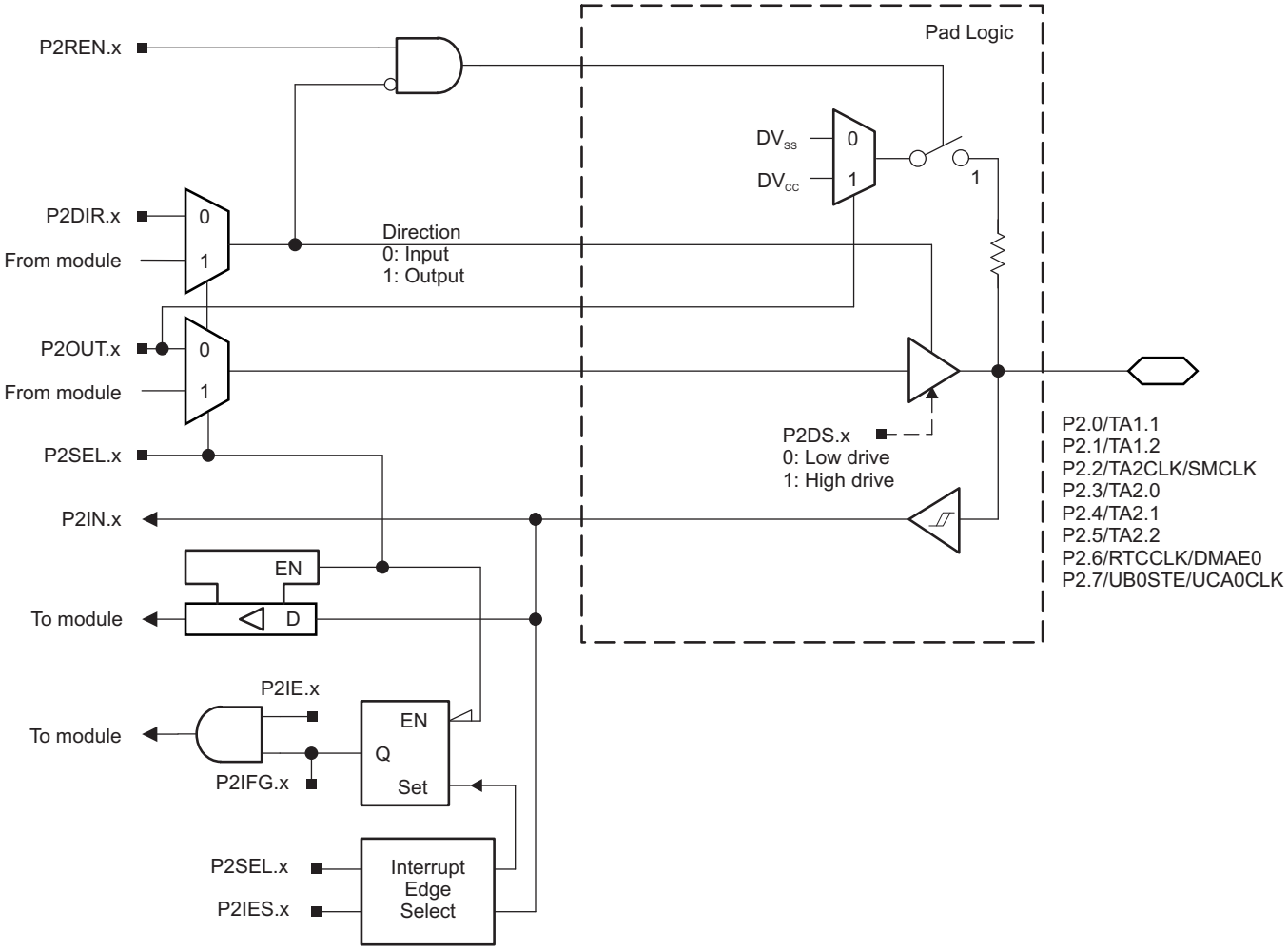

Figure 6-3. Port P2 (P2.0 to P2.7) Diagram

Table 6-44. Port P2 (P2.0 to P2.7) Pin Functions

PIN NAME (P2.x)	x	FUNCTION	CONTROL BITS OR SIGNALS[1]	
			P2DIR.x	P2SEL.x
P2.0/TA1.1	0	P2.0 (I/O)	I: 0; O: 1	0
		TA1.CCI1A	0	1
		TA1.1	1	1
P2.1/TA1.2	1	P2.1 (I/O)	I: 0; O: 1	0
		TA1.CCI2A	0	1
		TA1.2	1	1
P2.2/TA2CLK/SMCLK	2	P2.2 (I/O)	I: 0; O: 1	0
		TA2CLK	0	1
		SMCLK	1	1
P2.3/TA2.0	3	P2.3 (I/O)	I: 0; O: 1	0
		TA2.CCI0A	0	1
		TA2.0	1	1
P2.4/TA2.1	4	P2.4 (I/O)	I: 0; O: 1	0
		TA2.CCI1A	0	1
		TA2.1	1	1
P2.5/TA2.2	5	P2.5 (I/O)	I: 0; O: 1	0
		TA2.CCI2A	0	1
		TA2.2	1	1
P2.6/RTCCLK/DMAE0	6	P2.6 (I/O)	I: 0; O: 1	0
		DMAE0	0	1
		RTCCLK	1	1
P2.7/UCB0STE/UCA0CLK	7	P2.7 (I/O)	I: 0; O: 1	0
		UCB0STE/UCA0CLK[2] [3]	X	1

(1) X = Don't care
(2) The pin direction is controlled by the USCI module.
(3) UCA0CLK function takes precedence over UCB0STE function. If the pin is required as UCA0CLK input or output, USCI_B0 is forced to 3-wire SPI mode if 4-wire SPI mode is selected.

Copyright © 2010–2020, Texas Instruments Incorporated

6.11.3 Port P3 (P3.0 to P3.4) Input/Output With Schmitt Trigger

Figure 6-4 shows the port diagram. Table 6-45 summarizes the selection of the pin functions.

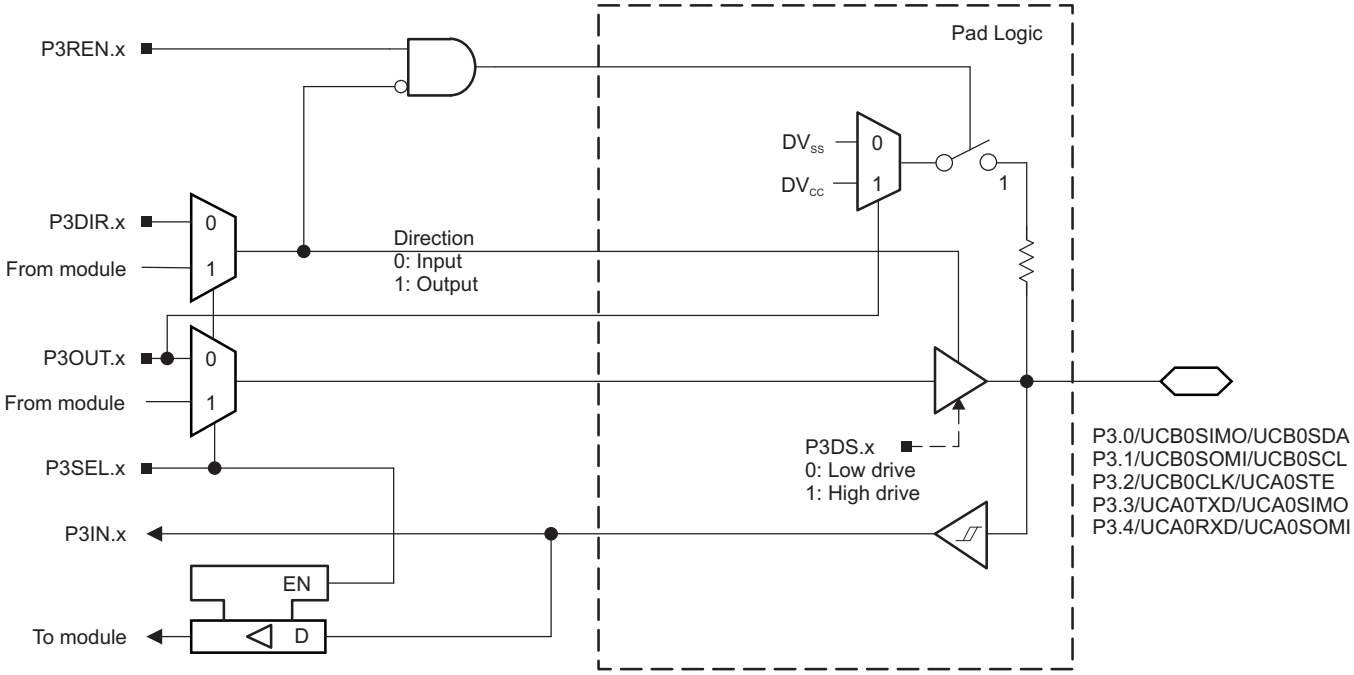

Figure 6-4. Port P3 (P3.0 to P3.7) Diagram

Table 6-45. Port P3 (P3.0 to P3.7) Pin Functions

PIN NAME (P3.x)	x	FUNCTION	CONTROL BITS OR SIGNALS(1)	
			P3DIR.x	P3SEL.x
P3.0/UCB0SIMO/UCB0SDA	0	P3.0 (I/O)	I: 0; O: 1	0
		UCB0SIMO/UCB0SDA(2) (3)	X	1
P3.1/UCB0SOMI/UCB0SCL	1	P3.1 (I/O)	I: 0; O: 1	0
		UCB0SOMI/UCB0SCL(2) (3)	X	1
P3.2/UCB0CLK/UCA0STE	2	P3.2 (I/O)	I: 0; O: 1	0
		UCB0CLK/UCA0STE(2) (4)	X	1
P3.3/UCA0TXD/UCA0SIMO	3	P3.3 (I/O)	I: 0; O: 1	0
		UCA0TXD/UCA0SIMO(2)	X	1
P3.4/UCA0RXD/UCA0SOMI	4	P3.4 (I/O)	I: 0; O: 1	0
		UCA0RXD/UCA0SOMI(2)	X	1

(1) X = Don't care
(2) The pin direction is controlled by the USCI module.
(3) If the I^2C functionality is selected, the output drives only the logical 0 to V_{SS} level.
(4) UCB0CLK function takes precedence over UCA0STE function. If the pin is required as UCB0CLK input or output, USCI_A0 is forced to 3-wire SPI mode if 4-wire SPI mode is selected.

6.11.4 Port P4 (P4.0 to P4.7) Input/Output With Schmitt Trigger

Figure 6-5 shows the port diagram. Table 6-46 summarizes the selection of the pin functions.

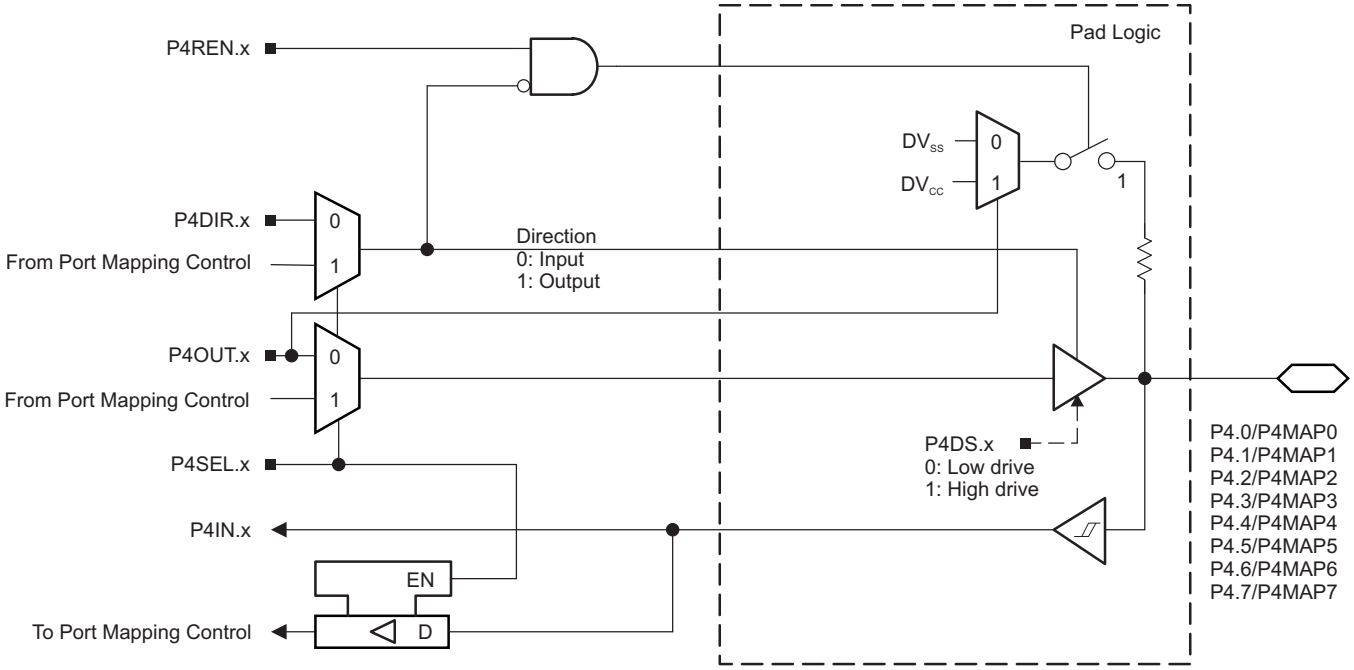

Figure 6-5. Port P4 (P4.0 to P4.7) Diagram

Table 6-46. Port P4 (P4.0 to P4.7) Pin Functions

PIN NAME (P4.x)	x	FUNCTION	CONTROL BITS OR SIGNALS		
			P4DIR.x(1)	P4SEL.x	P4MAPx
P4.0/P4MAP0	0	P4.0 (I/O)	I: 0; O: 1	0	X
		Mapped secondary digital function	X	1	≤ 30
P4.1/P4MAP1	1	P4.1 (I/O)	I: 0; O: 1	0	X
		Mapped secondary digital function	X	1	≤ 30
P4.2/P4MAP2	2	P4.2 (I/O)	I: 0; O: 1	0	X
		Mapped secondary digital function	X	1	≤ 30
P4.3/P4MAP3	3	P4.3 (I/O)	I: 0; O: 1	0	X
		Mapped secondary digital function	X	1	≤ 30
P4.4/P4MAP4	4	P4.4 (I/O)	I: 0; O: 1	0	X
		Mapped secondary digital function	X	1	≤ 30
P4.5/P4MAP5	5	P4.5 (I/O)	I: 0; O: 1	0	X
		Mapped secondary digital function	X	1	≤ 30
P4.6/P4MAP6	6	P4.6 (I/O)	I: 0; O: 1	0	X
		Mapped secondary digital function	X	1	≤ 30
P4.7/P4MAP7	7	P4.7 (I/O)	I: 0; O: 1	0	X
		Mapped secondary digital function	X	1	≤ 30

(1) The direction of some mapped secondary functions are controlled directly by the module. See Table 6-6 for specific direction control information of mapped secondary functions.

Copyright © 2010–2020, Texas Instruments Incorporated

6.11.5 Port P5 (P5.0 and P5.1) Input/Output With Schmitt Trigger

Figure 6-6 shows the port diagram. Table 6-47 summarizes the selection of the pin functions.

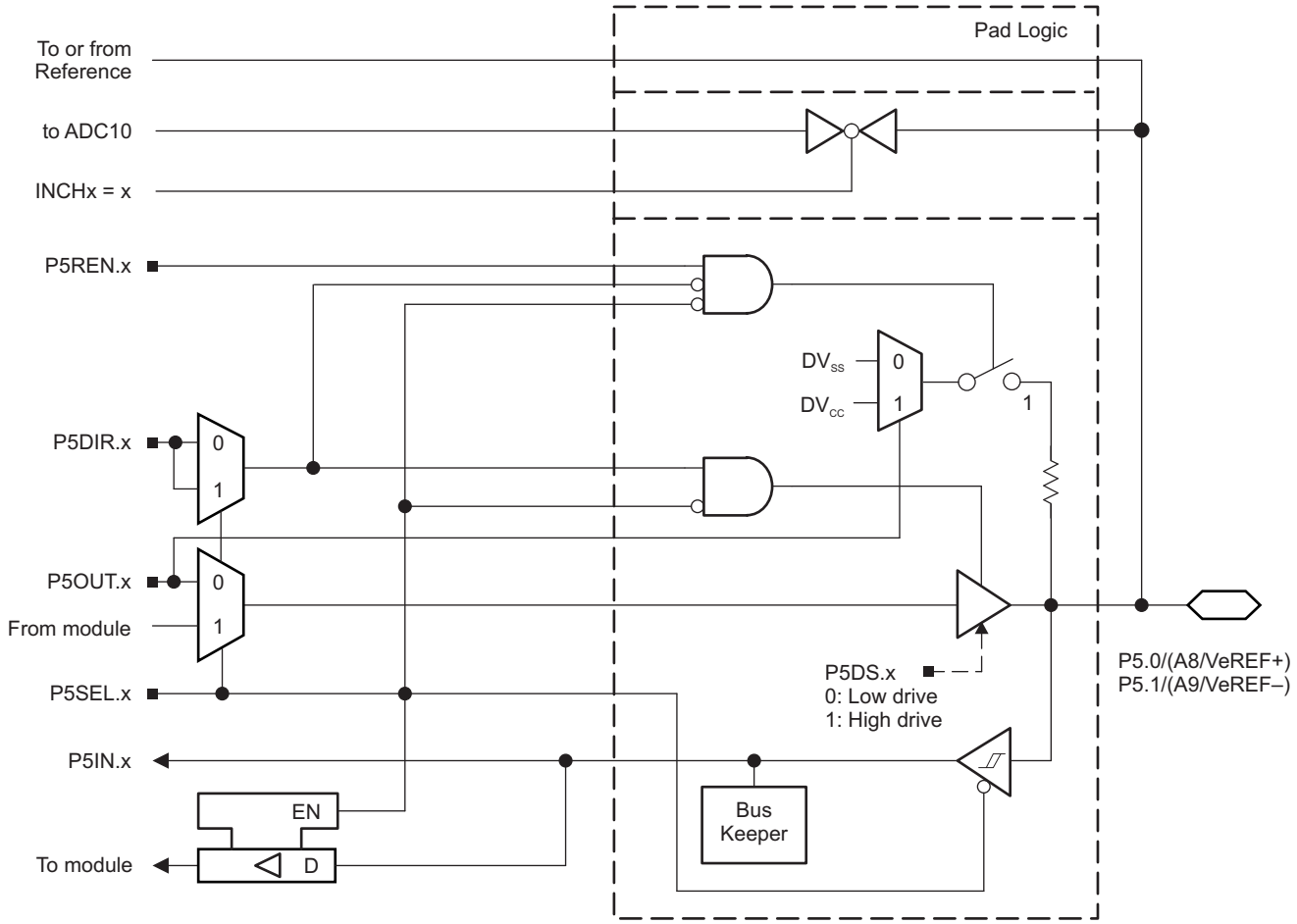

Figure 6-6. Port P5 (P5.0 and P5.1) Diagram

Table 6-47. Port P5 (P5.0 and P5.1) Pin Functions

PIN NAME (P5.x)	x	FUNCTION	CONTROL BITS OR SIGNALS (1)	
			P5DIR.x	P5SEL.x
P5.0/A8/VeREF+ (2)	0	P5.0 (I/O) (3)	I: 0; O: 1	0
		A8/VeREF+ (4)	X	1
P5.1/A9/VeREF– (5)	1	P5.1 (I/O) (3)	I: 0; O: 1	0
		A9/VeREF– (6)	X	1

(1) X = Don't care
(2) VeREF+ available on devices with ADC10_A.
(3) Default condition
(4) Setting the P5SEL.0 bit disables the output driver and the input Schmitt trigger to prevent parasitic cross currents when applying analog signals. An external voltage can be applied to VeREF+ and used as the reference for the ADC10_A when available.
(5) VeREF- available on devices with ADC10_A.
(6) Setting the P5SEL.1 bit disables the output driver and the input Schmitt trigger to prevent parasitic cross currents when applying analog signals. An external voltage can be applied to VeREF- and used as the reference for the ADC10_A when available.

6.11.6 Port P5 (P5.2) Input/Output With Schmitt Trigger

Figure 6-7 shows the port diagram. Table 6-48 summarizes the selection of the pin functions.

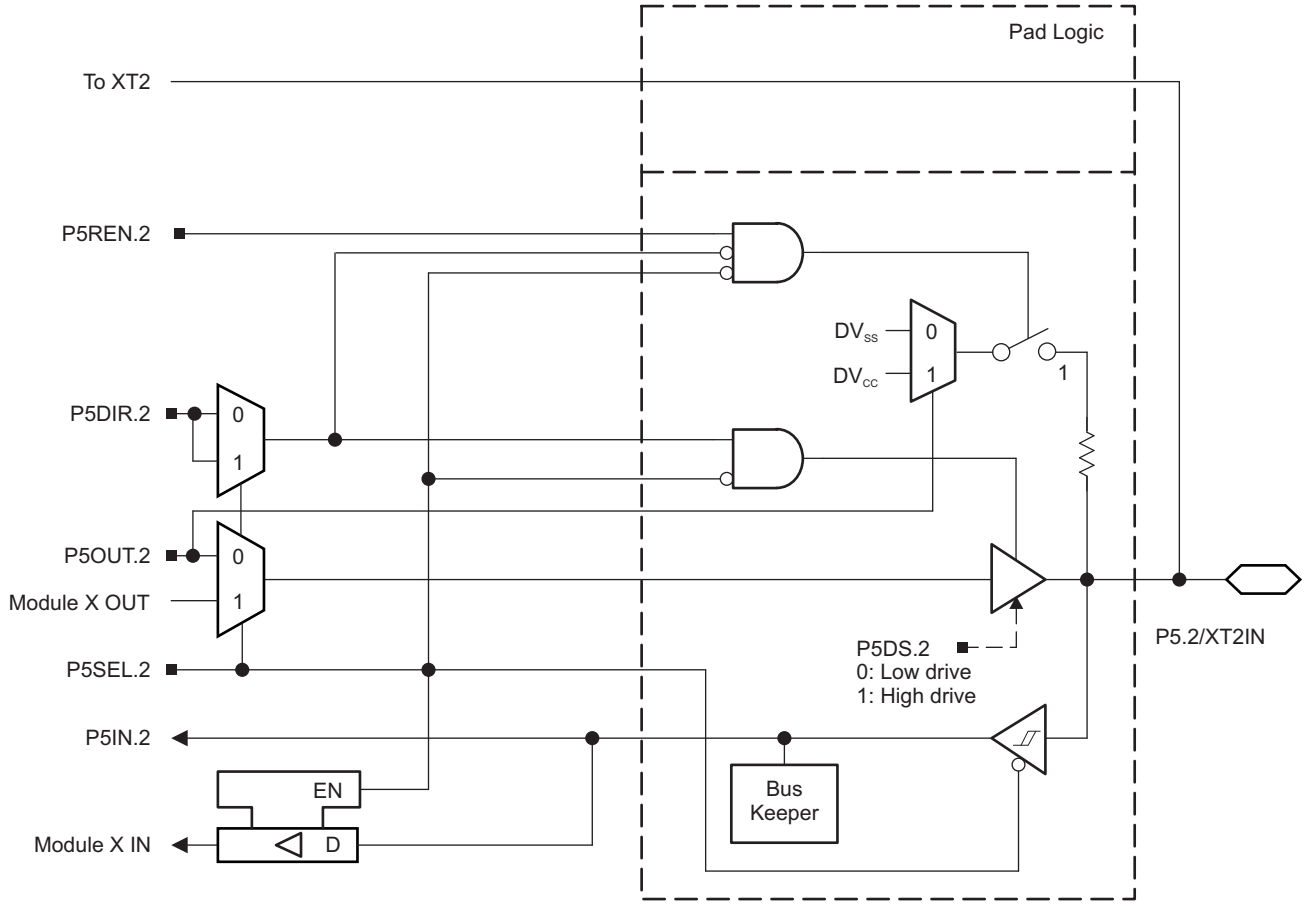

Figure 6-7. Port P5 (P5.2) Diagram

Copyright © 2010–2020, Texas Instruments Incorporated

6.11.7 Port P5 (P5.3) Input/Output With Schmitt Trigger

Figure 6-8 shows the port diagram. Table 6-48 summarizes the selection of the pin functions.

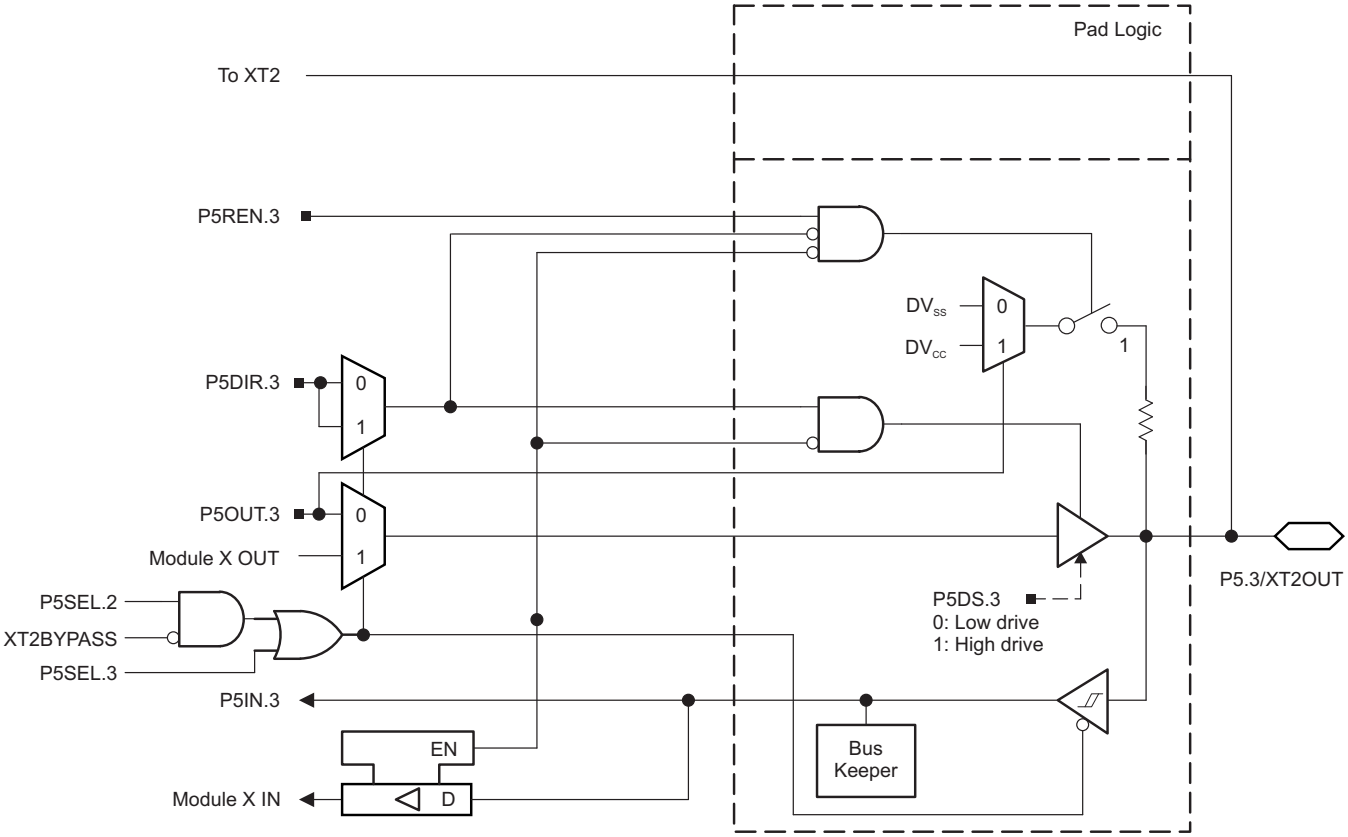

Figure 6-8. Port P5 (P5.3) Diagram

Table 6-48. Port P5 (P5.2 and P5.3) Pin Functions

PIN NAME (P5.x)	x	FUNCTION	CONTROL BITS OR SIGNALS(1)			
			P5DIR.x	P5SEL.2	P5SEL.3	XT2BYPASS
P5.2/XT2IN	2	P5.2 (I/O)	I: 0; O: 1	0	X	X
		XT2IN crystal mode(2)	X	1	X	0
		XT2IN bypass mode(2)	X	1	X	1
P5.3/XT2OUT	3	P5.3 (I/O)	I: 0; O: 1	0	0	X
		XT2OUT crystal mode(3)	X	1	X	0
		P5.3 (I/O)(3)	X	1	0	1

(1) X = Don't care
(2) Setting P5SEL.2 causes the general-purpose I/O to be disabled. Pending the setting of XT2BYPASS, P5.2 is configured for crystal mode or bypass mode.
(3) Setting P5SEL.2 causes the general-purpose I/O to be disabled in crystal mode. When using bypass mode, P5.3 can be used as general-purpose I/O.

6.11.8 Port P5 (P5.4 and P5.5) Input/Output With Schmitt Trigger

Figure 6-9 and Figure 6-10 show the port diagrams. Table 6-49 summarizes the selection of the pin functions.

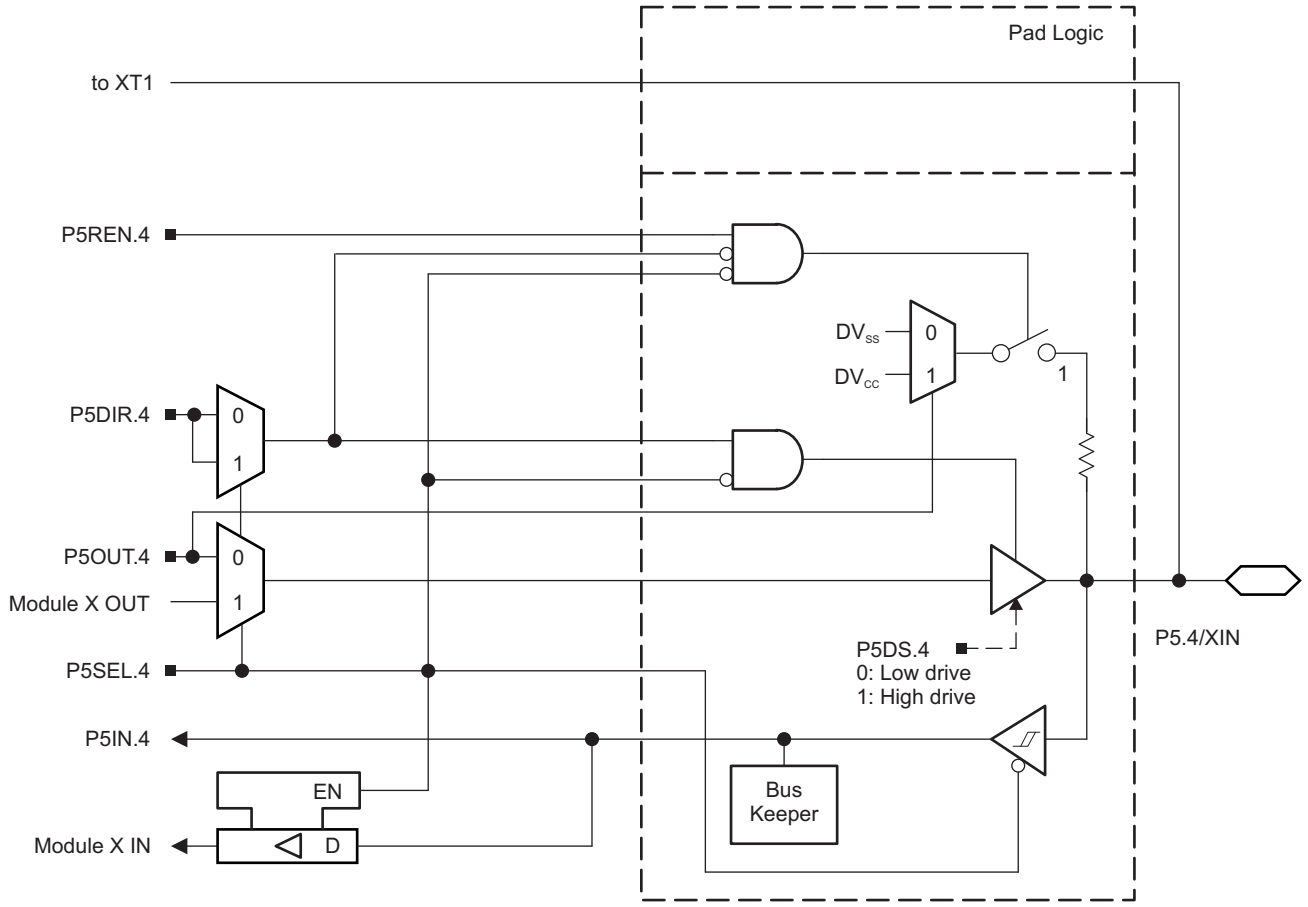

Figure 6-9. Port P5 (P5.4) Diagram

Copyright © 2010–2020, Texas Instruments Incorporated

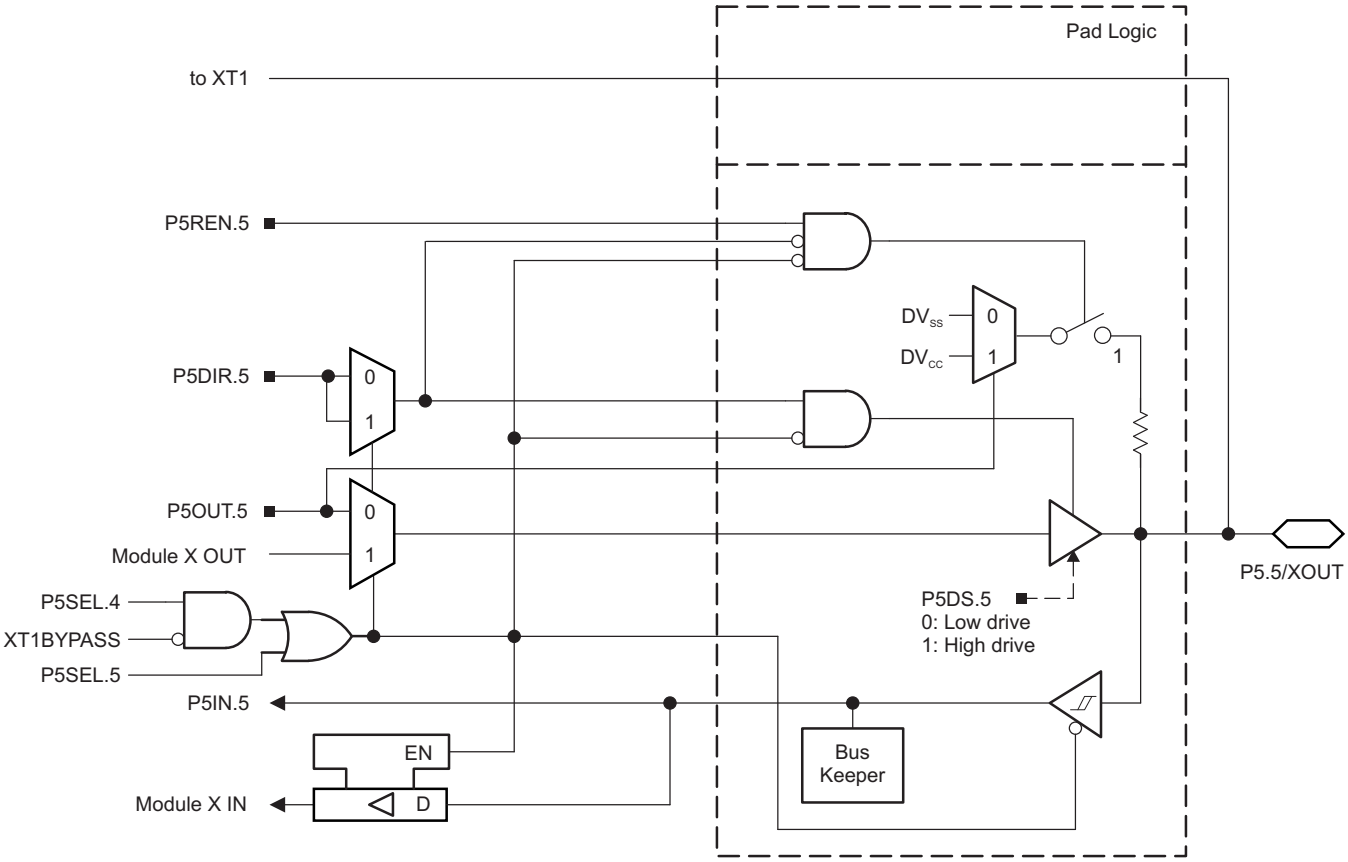

Figure 6-10. Port P5 (P5.5) Diagram

Table 6-49. Port P5 (P5.4 and P5.5) Pin Functions

PIN NAME (P7.x)	x	FUNCTION	CONTROL BITS OR SIGNALS[1]			
			P5DIR.x	P5SEL.4	P5SEL.5	XT1BYPASS
P5.4/XIN	4	P5.4 (I/O)	I: 0; O: 1	0	X	X
		XIN crystal mode[2]	X	1	X	0
		XIN bypass mode[2]	X	1	X	1
P5.5/XOUT	5	P5.5 (I/O)	I: 0; O: 1	0	0	X
		XOUT crystal mode[3]	X	1	X	0
		P5.5 (I/O)[3]	X	1	0	1

(1) X = Don't care
(2) Setting P5SEL.4 causes the general-purpose I/O to be disabled. Pending the setting of XT1BYPASS, P5.4 is configured for crystal mode or bypass mode.
(3) Setting P5SEL.4 causes the general-purpose I/O to be disabled in crystal mode. When using bypass mode, P5.5 can be used as general-purpose I/O.

6.11.9 Port P6 (P6.0 to P6.7) Input/Output With Schmitt Trigger

Figure 6-11 shows the port diagram. Table 6-50 summarizes the selection of the pin functions.

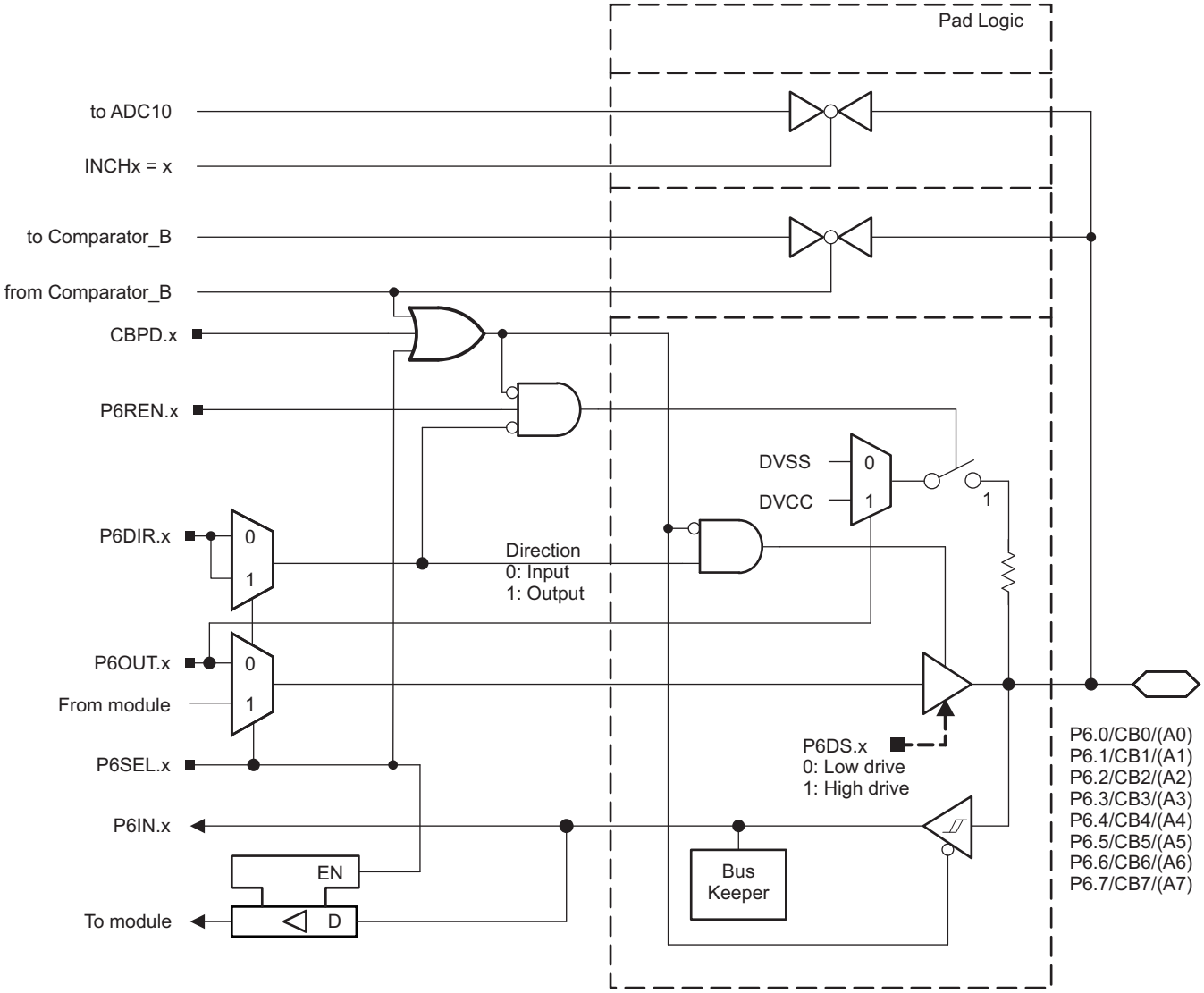

Figure 6-11. Port P6 (P6.0 to P6.7) Diagram

Copyright © 2010–2020, Texas Instruments Incorporated

Table 6-50. Port P6 (P6.0 to P6.7) Pin Functions

PIN NAME (P6.x)	x	FUNCTION	CONTROL BITS OR SIGNALS		
			P6DIR.x	P6SEL.x	CBPD
P6.0/CB0/(A0)	0	P6.0 (I/O)	I: 0; O: 1	0	0
		A0 (only on devices with ADC)	X	1	X
		CB0[(1)]	X	X	1
P6.1/CB1/(A1)	1	P6.1 (I/O)	I: 0; O: 1	0	0
		A1 (only on devices with ADC)	X	1	X
		CB1[(1)]	X	X	1
P6.2/CB2/(A2)	2	P6.2 (I/O)	I: 0; O: 1	0	0
		A2 (only on devices with ADC)	X	1	X
		CB2[(1)]	X	X	1
P6.3/CB3/(A3)	3	P6.3 (I/O)	I: 0; O: 1	0	0
		A3 (only on devices with ADC)	X	1	X
		CB3[(1)]	X	X	1
P6.4/CB4/(A4)	4	P6.4 (I/O)	I: 0; O: 1	0	0
		A4 (only on devices with ADC)	X	1	X
		CB4[(1)]	X	X	1
P6.5/CB5/(A5)	5	P6.5 (I/O)	I: 0; O: 1	0	0
		A5 (only on devices with ADC)	X	1	X
		CB5[(1)]	X	X	1
P6.6/CB6/(A6)	6	P6.6 (I/O)	I: 0; O: 1	0	0
		A6 (only on devices with ADC)	X	1	X
		CB6[(1)]	X	X	1
P6.7/CB7/(A7)	7	P6.7 (I/O)	I: 0; O: 1	0	0
		A7 (only on devices with ADC)	X	1	X
		CB7[(1)]	X	X	1

(1) Setting the CBPD.x bit disables the output driver and the input Schmitt trigger to prevent parasitic cross currents when applying analog signals. Selecting the CBx input pin to the comparator multiplexer with the CBx bits automatically disables output driver and input buffer for that pin, regardless of the state of the associated CBPD.x bit.

6.11.10 Port U (PU.0 and PU.1) Input/Output

Figure 6-12 shows the port diagram. Table 6-51 summarizes the selection of the pin functions.

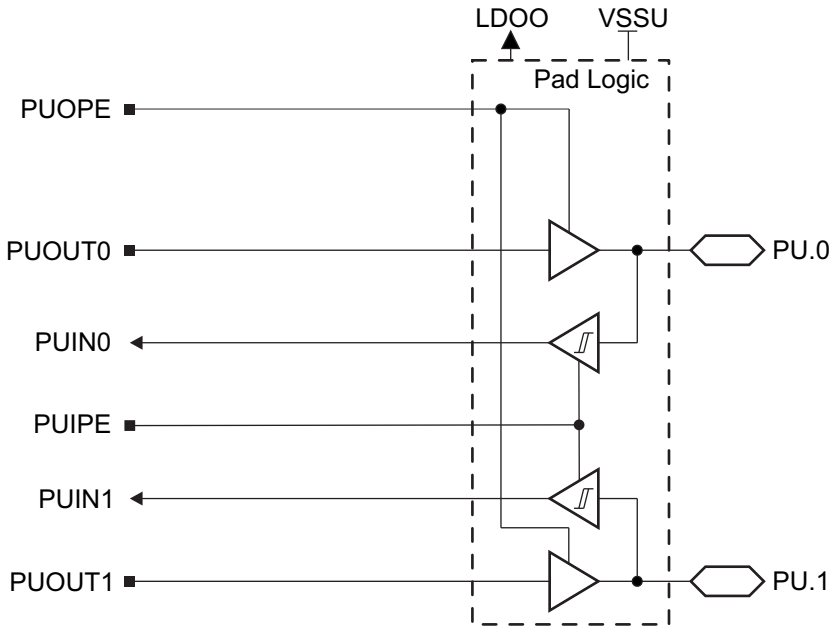

Figure 6-12. Port U (PU.0 and PU.1) Diagram

Table 6-51. Port U (PU.0 and PU.1) Pin Functions (1)

PUIPE	PUOPE	PUOUT1	PUOUT0	PU.1	PU.0	PORT U FUNCTION
0	1	0	0	Output low	Output low	Outputs enabled
0	1	0	1	Output low	Output high	Outputs enabled
0	1	1	0	Output high	Output low	Outputs enabled
0	1	1	1	Output high	Output high	Outputs enabled
1	0	X	X	Input enabled	Input enabled	Inputs enabled
0	0	X	X	Hi-Z	Hi-Z	Outputs and inputs disabled

(1) PU.1 and PU.0 inputs and outputs are supplied from LDOO. LDOO can be generated by the device using the integrated 3.3-V LDO when enabled. LDOO can also be supplied externally when the 3.3-V LDO is not being used and is disabled.

Copyright © 2010–2020, Texas Instruments Incorporated

6.11.11 Port J (PJ.0) JTAG Pin TDO, Input/Output With Schmitt Trigger or Output

Figure 6-13 shows the port diagram. Table 6-52 summarizes the selection of the pin functions.

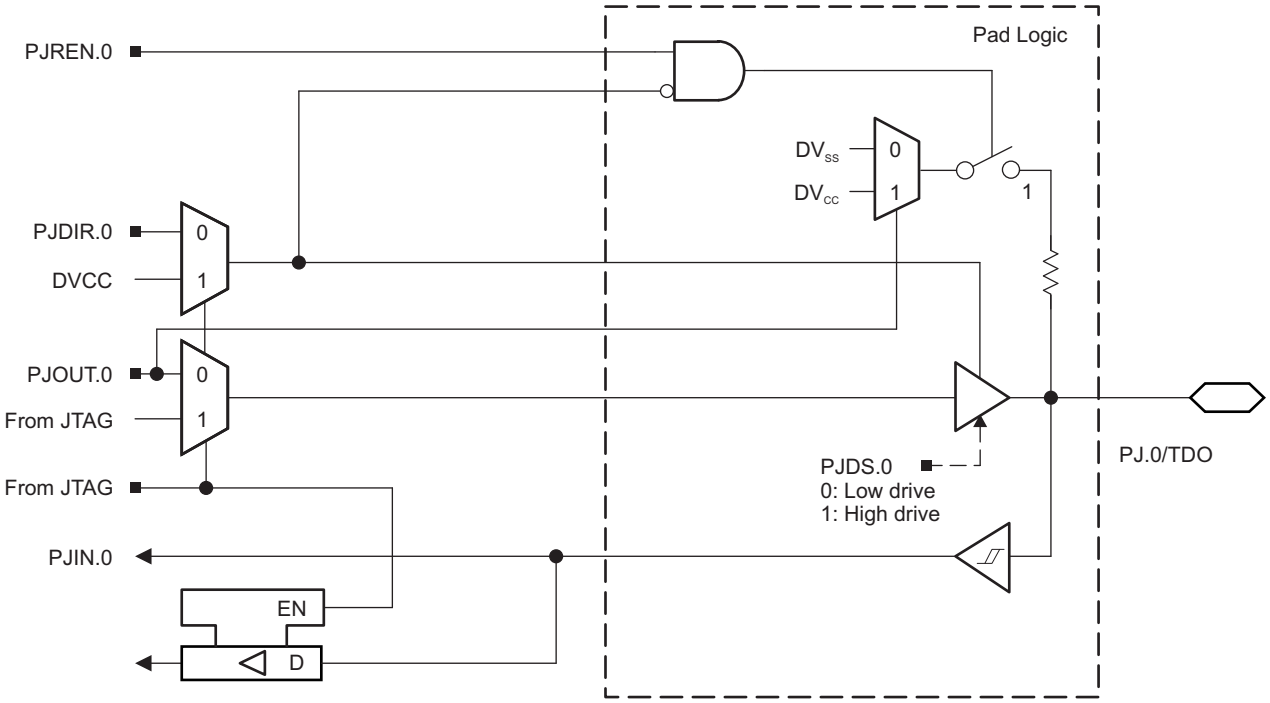

Figure 6-13. Port PJ (PJ.0) Diagram

6.11.12 Port J (PJ.1 to PJ.3) JTAG Pins TMS, TCK, TDI/TCLK, Input/Output With Schmitt Trigger or Output

Figure 6-14 shows the port diagram. Table 6-52 summarizes the selection of the pin functions.

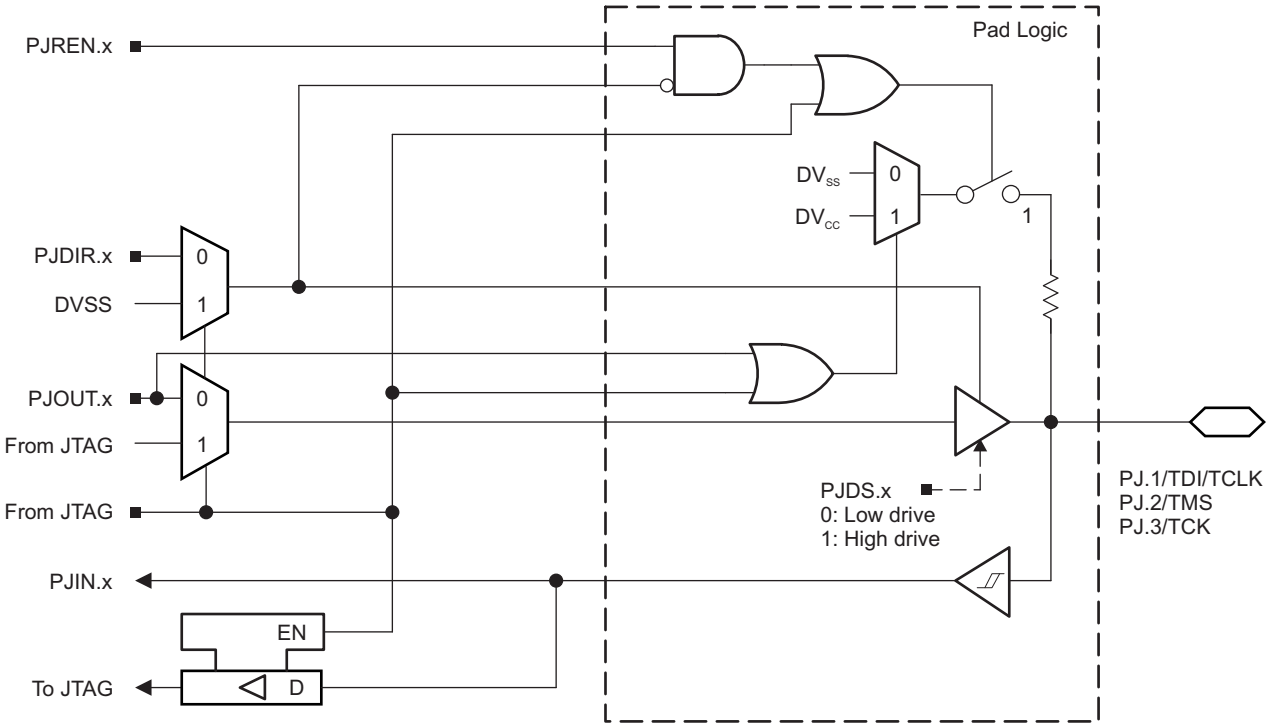

Figure 6-14. Port PJ (PJ.1 to PJ.3) Diagram

Table 6-52. Port PJ (PJ.0 to PJ.3) Pin Functions

PIN NAME (PJ.x)	x	FUNCTION	CONTROL BITS OR SIGNALS (1)
			PJDIR.x
PJ.0/TDO	0	PJ.0 (I/O) (2)	I: 0; O: 1
		TDO (3)	X
PJ.1/TDI/TCLK	1	PJ.1 (I/O) (2)	I: 0; O: 1
		TDI/TCLK (3) (4)	X
PJ.2/TMS	2	PJ.2 (I/O) (2)	I: 0; O: 1
		TMS (3) (4)	X
PJ.3/TCK	3	PJ.3 (I/O) (2)	I: 0; O: 1
		TCK (3) (4)	X

(1) X = Don't care
(2) Default condition
(3) The pin direction is controlled by the JTAG module.
(4) In JTAG mode, pullups are activated automatically on TMS, TCK, and TDI/TCLK. PJREN.x are don't care.

Copyright © 2010–2020, Texas Instruments Incorporated

6.12 Device Descriptors

Table 6-53 lists the complete contents of the device descriptor tag-length-value (TLV) structure for each device type.

Table 6-53. Device Descriptors (1)

DESCRIPTION		ADDRESS	SIZE (bytes)	VALUE						
				F5304	F5308 RGC, ZXH, ZQE	F5308 RGZ, PT	F5309 RGC, ZXH, ZQE	F5309 RGZ, PT	F5310 RGC, ZXH, ZQE	F5310 RGZ, PT
Info Block	Info length	01A00h	1	06h	06h	06h	06h	06h	06h	06h
	CRC length	01A01h	1	06h	06h	06h	06h	06h	06h	06h
	CRC value	01A02h	2	Per unit	Per unit	Per unit	Per unit	Per unit	Per unit	Per unit
	Device ID	01A04h	1	12h	13h	13h	14h	14h	15h	15h
	Device ID	01A05h	1	81h	81h	81h	81h	81h	81h	81h
	Hardware revision	01A06h	1	Per unit	Per unit	Per unit	Per unit	Per unit	Per unit	Per unit
	Firmware revision	01A07h	1	Per unit	Per unit	Per unit	Per unit	Per unit	Per unit	Per unit
Die Record	Die record tag	01A08h	1	08h	08h	08h	08h	08h	08h	08h
	Die record length	01A09h	1	0Ah	0Ah	0Ah	0Ah	0Ah	0Ah	0Ah
	Lot/wafer ID	01A0Ah	4	Per unit	Per unit	Per unit	Per unit	Per unit	Per unit	Per unit
	Die X position	01A0Eh	2	Per unit	Per unit	Per unit	Per unit	Per unit	Per unit	Per unit
	Die Y position	01A10h	2	Per unit	Per unit	Per unit	Per unit	Per unit	Per unit	Per unit
	Test results	01A12h	2	Per unit	Per unit	Per unit	Per unit	Per unit	Per unit	Per unit
ADC10 Calibration	ADC10 Calibration Tag	01A14h	1	13h	13h	13h	13h	13h	13h	13h
	ADC10 Calibration Length	01A15h	1	10h	10h	10h	10h	10h	10h	10h
	ADC Gain Factor	01A16h	2	Per unit	Per unit	Per unit	Per unit	Per unit	Per unit	Per unit
	ADC Offset	01A18h	2	Per unit	Per unit	Per unit	Per unit	Per unit	Per unit	Per unit
	ADC 1.5-V Reference Temperature sensor 30°C	01A1Ah	2	Per unit	Per unit	Per unit	Per unit	Per unit	Per unit	Per unit
	ADC 1.5-V Reference Temperature sensor 85°C	01A1Ch	2	Per unit	Per unit	Per unit	Per unit	Per unit	Per unit	Per unit
	ADC 2.0-V Reference Temperature sensor 30°C	01A1Eh	2	Per unit	Per unit	Per unit	Per unit	Per unit	Per unit	Per unit
	ADC 2.0-V Reference Temperature sensor 85°C	01A20h	2	Per unit	Per unit	Per unit	Per unit	Per unit	Per unit	Per unit
	ADC 2.5-V Reference Temperature sensor 30°C	01A22h	2	Per unit	Per unit	Per unit	Per unit	Per unit	Per unit	Per unit
	ADC 2.5-V Reference Temperature sensor 85°C	01A24h	2	Per unit	Per unit	Per unit	Per unit	Per unit	Per unit	Per unit
REF Calibration	REF calibration tag	01A26h	1	12h	12h	12h	12h	12h	12h	12h
	REF calibration length	01A27h	1	06h	06h	06h	06h	06h	06h	06h
	REF 1.5-V reference factor	01A28h	2	Per unit	Per unit	Per unit	Per unit	Per unit	Per unit	Per unit
	REF 2.0-V reference factor	01A2Ah	2	Per unit	Per unit	Per unit	Per unit	Per unit	Per unit	Per unit
	REF 2.5-V reference factor	01A2Ch	2	Per unit	Per unit	Per unit	Per unit	Per unit	Per unit	Per unit

(1) N/A = Not applicable

Table 6-53. Device Descriptors[(1)] (continued)

DESCRIPTION		ADDRESS	SIZE (bytes)	VALUE						
				F5304	F5308 RGC, ZXH, ZQE	F5308 RGZ, PT	F5309 RGC, ZXH, ZQE	F5309 RGZ, PT	F5310 RGC, ZXH, ZQE	F5310 RGZ, PT
Peripheral Descriptor	Peripheral descriptor tag	01A2Eh	1	02h	02h	02h	02h	02h	02h	02h
	Peripheral descriptor length	01A2Fh	1	5Ch	60h	60h	61h	61h	60h	60h
	Memory 1		2	08h 8Ah	08h 8Ah	08h 8Ah	08h 8Ah	08h 8Ah	08h 8Ah	08h 8Ah
	Memory 2		2	0Ch 86h	0Ch 86h	0Ch 86h	0Ch 86h	0Ch 86h	0Ch 86h	0Ch 86h
	Memory 3		2	0Eh 2Dh	0Eh 2Dh	0Eh 2Dh	0Eh 2Dh	0Eh 2Dh	0Eh 2Dh	0Eh 2Dh
	Memory 4		2	2Ah 70h	2Ah 60h	2Ah 60h	2Ah 50h	2Ah 50h	2Ah 40h	2Ah 40h
	Memory 5		2/1	8Eh	90h	90h	91h 8Eh	91h 8Eh	92h	92h
	Delimiter		1	00h	00h	00h	00h	00h	00h	00h
	Peripheral count		1	1Eh	20h	20h	20h	20h	20h	20h
	MSP430CPUXV2		2	00h 23h	00h 23h	00h 23h	00h 23h	00h 23h	00h 23h	00h 23h
	JTAG		2	00h 09h	00h 09h	00h 09h	00h 09h	00h 09h	00h 09h	00h 09h
	SBW		2	00h 0Fh	00h 0Fh	00h 0Fh	00h 0Fh	00h 0Fh	00h 0Fh	00h 0Fh
	EEM-S		2	00h 03h	00h 03h	00h 03h	00h 03h	00h 03h	00h 03h	00h 03h
	TI BSL		2	00h FCh	00h FCh	00h FCh	00h FCh	00h FCh	00h FCh	00h FCh
	SFR		2	10h 41h	10h 41h	10h 41h	10h 41h	10h 41h	10h 41h	10h 41h
	PMM		2	02h 30h	02h 30h	02h 30h	02h 30h	02h 30h	02h 30h	02h 30h
	FCTL		2	02h 38h	02h 38h	02h 38h	02h 38h	02h 38h	02h 38h	02h 38h
	CRC16		2	01h 3Ch	01h 3Ch	01h 3Ch	01h 3Ch	01h 3Ch	01h 3Ch	01h 3Ch
	CRC16_RB		2	00h 3Dh	00h 3Dh	00h 3Dh	00h 3Dh	00h 3Dh	00h 3Dh	00h 3Dh
	RAMCTL		2	00h 44h	00h 44h	00h 44h	00h 44h	00h 44h	00h 44h	00h 44h
	WDT_A		2	00h 40h	00h 40h	00h 40h	00h 40h	00h 40h	00h 40h	00h 40h
	UCS		2	01h 48h	01h 48h	01h 48h	01h 48h	01h 48h	01h 48h	01h 48h
	SYS		2	02h 42h	02h 42h	02h 42h	02h 42h	02h 42h	02h 42h	02h 42h
	REF		2	03h A0h	03h A0h	03h A0h	03h A0h	03h A0h	03h A0h	03h A0h
	Port Mapping		2	01h 10h	01h 10h	01h 10h	01h 10h	01h 10h	01h 10h	01h 10h
	Port 1 and 2		2	04h 51h	04h 51h	04h 51h	04h 51h	04h 51h	04h 51h	04h 51h
	Port 3 and 4		2	02h 52h	02h 52h	02h 52h	02h 52h	02h 52h	02h 52h	02h 52h
	Port 5 and 6		2	02h 53h	02h 53h	02h 53h	02h 53h	02h 53h	02h 53h	02h 53h

Copyright © 2010–2020, Texas Instruments Incorporated

Table 6-53. Device Descriptors[(1)] (continued)

DESCRIPTION		ADDRESS	SIZE (bytes)	VALUE						
				F5304	F5308 RGC, ZXH, ZQE	F5308 RGZ, PT	F5309 RGC, ZXH, ZQE	F5309 RGZ, PT	F5310 RGC, ZXH, ZQE	F5310 RGZ, PT
Peripheral Descriptor (continued)	JTAG		2	0Eh 5Fh	0Eh 5Fh	0Eh 5Fh	0Eh 5Fh	0Eh 5Fh	0Eh 5Fh	0Eh 5Fh
	TA0		2	02h 62h	02h 62h	02h 62h	02h 62h	02h 62h	02h 62h	02h 62h
	TA1		2	04h 61h	04h 61h	04h 61h	04h 61h	04h 61h	04h 61h	04h 61h
	TB0		2	04h 67h	04h 67h	04h 67h	04h 67h	04h 67h	04h 67h	04h 67h
	TA2		2	04h 61h	04h 61h	04h 61h	04h 61h	04h 61h	04h 61h	04h 61h
	RTC		2	0Ah 68h	0Ah 68h	0Ah 68h	0Ah 68h	0Ah 68h	0Ah 68h	0Ah 68h
	MPY32		2	02h 85h	02h 85h	02h 85h	02h 85h	02h 85h	02h 85h	02h 85h
	DMA-3		2	04h 47h	04h 47h	04h 47h	04h 47h	04h 47h	04h 47h	04h 47h
	USCI_A, USCI_B		2	10h 90h	0Ch 90h	0Ch 90h	0Ch 90h	0Ch 90h	0Ch 90h	0Ch 90h
	USCI_A, USCI_B		2	N/A	04h 90h	04h 90h	04h 90h	04h 90h	04h 90h	04h 90h
	ADC10_A		2	14h D3h	14h D3h	14h D3h	14h D3h	14h D3h	14h D3h	14h D3h
	COMP_B		2	N/A	18h A8h	18h A8h	18h A8h	18h A8h	18h A8h	18h A8h
	LDO		2	1Ch 5Ch	04h 5Ch	04h 5Ch	04h 5Ch	04h 5Ch	04h 5Ch	04h 5Ch
Interrupts	COMP_B		1	01h	A8h	A8h	A8h	A8h	A8h	A8h
	TB0.CCIFG0		1	64h	64h	64h	64h	64h	64h	64h
	TB0.CCIFG1..6		1	65h	65h	65h	65h	65h	65h	65h
	WDTIFG		1	40h	40h	40h	40h	40h	40h	40h
	USCI_A0		1	01h	90h	90h	90h	90h	90h	90h
	USCI_B0		1	01h	91h	91h	91h	91h	91h	91h
	ADC10_A		1	D0h	D0h	D0h	D0h	D0h	D0h	D0h
	TA0.CCIFG0		1	60h	60h	60h	60h	60h	60h	60h
	TA0.CCIFG1..4		1	61h	61h	61h	61h	61h	61h	61h
	LDO-PWR		1	5Ch	5Ch	5Ch	5Ch	5Ch	5Ch	5Ch
	DMA		1	46h	46h	46h	46h	46h	46h	46h
	TA1.CCIFG0		1	62h	62h	62h	62h	62h	62h	62h
	TA1.CCIFG1..2		1	63h	63h	63h	63h	63h	63h	63h
	P1		1	50h	50h	50h	50h	50h	50h	50h
	USCI_A1		1	92h	92h	92h	92h	92h	92h	92h
	USCI_B1		1	93h	93h	93h	93h	93h	93h	93h
	TA1.CCIFG0		1	66h	66h	66h	66h	66h	66h	66h
	TA1.CCIFG1..2		1	67h	67h	67h	67h	67h	67h	67h
	P2		1	51h	51h	51h	51h	51h	51h	51h
	RTC_A		1	68h	68h	68h	68h	68h	68h	68h
	Delimiter		1	00h	00h	00h	00h	00h	00h	00h

Copyright © 2010–2020, Texas Instruments Incorporated

7 Device and Documentation Support

7.1 Getting Started and Next Steps

For more information on the MSP430 family of devices and the tools and libraries that are available to help with your development, visit the MSP430 ultra-low-power sensing and measurement MCUs overview.

7.2 Device Nomenclature

To designate the stages in the product development cycle, TI assigns prefixes to the part numbers of all MSP MCU devices. Each MSP MCU commercial family member has one of two prefixes: MSP or XMS. These prefixes represent evolutionary stages of product development from engineering prototypes (XMS) through fully qualified production devices (MSP).

XMS – Experimental device that is not necessarily representative of the final device's electrical specifications

MSP – Fully qualified production device

XMS devices are shipped against the following disclaimer:

"Developmental product is intended for internal evaluation purposes."

MSP devices have been characterized fully, and the quality and reliability of the device have been demonstrated fully. TI's standard warranty applies.

Predictions show that prototype devices (XMS) have a greater failure rate than the standard production devices. TI recommends that these devices not be used in any production system because their expected end-use failure rate still is undefined. Only qualified production devices are to be used.

TI device nomenclature also includes a suffix with the device family name. This suffix indicates the temperature range, package type, and distribution format. Figure 7-1 provides a legend for reading the complete device name.

Copyright © 2010–2020, Texas Instruments Incorporated

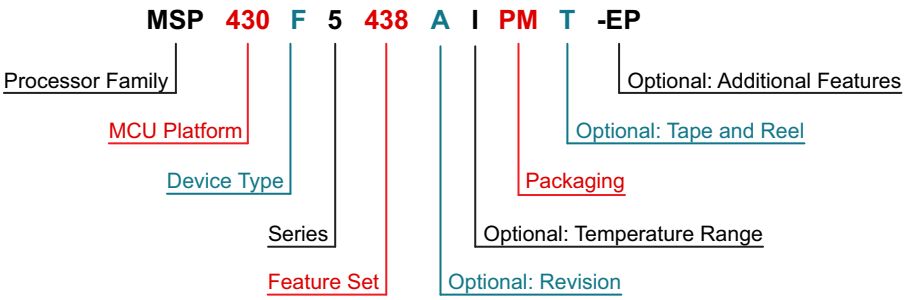

Processor Family	CC = Embedded RF Radio MSP = Mixed-Signal Processor XMS = Experimental Silicon PMS = Prototype Device	
MCU Platform	430 = MSP430 low-power microcontroller platform	
Device Type	**Memory Type** C = ROM F = Flash FR = FRAM G = Flash L = No nonvolatile memory	**Specialized Application** AFE = Analog front end BQ = Contactless power CG = ROM medical FE = Flash energy meter FG = Flash medical FW = Flash electronic flow meter
Series	1 = Up to 8 MHz 2 = Up to 16 MHz 3 = Legacy 4 = Up to 16 MHz with LCD driver	5 = Up to 25 MHz 6 = Up to 25 MHz with LCD driver 0 = Low-voltage series
Feature Set	Various levels of integration within a series	
Optional: Revision	Updated version of the base part number	
Optional: Temperature Range	S = 0°C to 50°C C = 0°C to 70°C I = –40°C to 85°C T = –40°C to 105°C	
Packaging	http://www.ti.com/packaging	
Optional: Tape and Reel	T = Small reel R = Large reel No markings = Tube or tray	
Optional: Additional Features	-EP = Enhanced product (–40°C to 105°C) -HT = Extreme temperature parts (–55°C to 150°C) -Q1 = Automotive Q100 qualified	

Figure 7-1. Device Nomenclature

7.3 Tools and Software

All MSP microcontrollers are supported by a wide variety of software and hardware development tools. Tools are available from TI and various third parties. See them all at MSP430 Ultra-Low-Power MCUs – Tools & software.

Table 7-1 lists the debug features of the MSP430F530x and MSP430F5310 MCUs. See the *Code Composer Studio for MSP430 User's Guide* for details on the available features.

Table 7-1. Hardware Debug Features

MSP430 ARCHITECTURE	4-WIRE JTAG	2-WIRE JTAG	BREAK-POINTS (N)	RANGE BREAK-POINTS	CLOCK CONTROL	STATE SEQUENCER	TRACE BUFFER	LPMx.5 DEBUGGING SUPPORT
MSP430Xv2	Yes	Yes	3	Yes	Yes	No	No	No

Design Kits and Evaluation Modules

64-Pin Target Development Board for MSP430F5x MCUs The MSP-TS430PN64B is a stand-alone 64-pin ZIF socket target board used to program and debug the MSP430 MCU in-system through the JTAG interface or the Spy Bi-Wire (2-wire JTAG) protocol.

64-Pin Target Development Board and MSP-FET Programmer Bundle for MSP430F5x MCUs The MSP-FET is a powerful flash emulation tool to quickly begin application development on the MSP430 MCU. It includes USB debugging interface used to program and debug the MSP430 in-system through the JTAG interface or the pin saving Spy Bi-Wire (2-wire JTAG) protocol. The flash memory can be erased and programmed in seconds with only a few keystrokes, and because the MSP430 flash is ultra-low power, no external power supply is required.

Software

MSP430Ware™ Software MSP430Ware software is a collection of code examples, data sheets, and other design resources for all MSP430 devices delivered in a convenient package. In addition to providing a complete collection of existing MSP430 MCU design resources, MSP430Ware software also includes a high-level API called MSP Driver Library. This library makes it easy to program MSP430 hardware. MSP430Ware software is available as a component of CCS or as a stand-alone package.

MSP430F530x, MSP430F5310 Code Examples C code examples that configure each of the integrated peripherals for various application needs.

MSP Driver Library Driver Library's abstracted API keeps you above the bits and bytes of the MSP430 hardware by providing easy-to-use function calls. Thorough documentation is delivered through a helpful API Guide, which includes details on each function call and the recognized parameters. Developers can use Driver Library functions to write complete projects with minimal overhead.

MSP EnergyTrace™ Technology EnergyTrace technology for MSP430 microcontrollers is an energy-based code analysis tool that measures and displays the application's energy profile and helps to optimize it for ultra-low-power consumption.

ULP (Ultra-Low Power) Advisor ULP Advisor™ software is a tool for guiding developers to write more efficient code to fully utilize the unique ultra-low power features of MSP and MSP432 microcontrollers. Aimed at both experienced and new microcontroller developers, ULP Advisor checks your code against a thorough ULP checklist to squeeze every last nano amp out of your application. At build time, ULP Advisor will provide notifications and remarks to highlight areas of your code that can be further optimized for lower power.

IEC60730 Software Package The IEC60730 MSP430 software package was developed to be useful in assisting customers in complying with IEC 60730-1:2010 (Automatic Electrical Controls for Household and Similar Use – Part 1: General Requirements) for up to Class B products, which includes home appliances, arc detectors, power converters, power tools, e-bikes, and many others. The IEC60730 MSP430 software package can be embedded in customer applications running on MSP430s to help simplify the customer's certification efforts of functional safety-compliant consumer devices to IEC 60730-1:2010 Class B.

Copyright © 2010–2020, Texas Instruments Incorporated

Fixed Point Math Library for MSP The MSP IQmath and Qmath Libraries are a collection of highly optimized and high-precision mathematical functions for C programmers to seamlessly port a floating-point algorithm into fixed-point code on MSP430 and MSP432 devices. These routines are typically used in computationally intensive real-time applications where optimal execution speed, high accuracy, and ultra-low energy are critical. By using the IQmath and Qmath libraries, it is possible to achieve execution speeds considerably faster and energy consumption considerably lower than equivalent code written using floating-point math.

Floating Point Math Library for MSP430 Continuing to innovate in the low power and low cost microcontroller space, TI brings you MSPMATHLIB. Leveraging the intelligent peripherals of our devices, this floating point math library of scalar functions brings you up to 26x better performance. Mathlib is easy to integrate into your designs. This library is free and is integrated in both Code Composer Studio and IAR IDEs. Read the user's guide for an in depth look at the math library and relevant benchmarks.

Development Tools

Code Composer Studio™ Integrated Development Environment for MSP Microcontrollers Code Composer Studio is an integrated development environment (IDE) that supports all MSP microcontroller devices. Code Composer Studio comprises a suite of embedded software utilities used to develop and debug embedded applications. It includes an optimizing C/C++ compiler, source code editor, project build environment, debugger, profiler, and many other features. The intuitive IDE provides a single user interface taking you through each step of the application development flow. Familiar utilities and interfaces allow users to get started faster than ever before. Code Composer Studio combines the advantages of the Eclipse software framework with advanced embedded debug capabilities from TI resulting in a compelling feature-rich development environment for embedded developers. When using CCS with an MSP MCU, a unique and powerful set of plugins and embedded software utilities are made available to fully leverage the MSP microcontroller.

Command-Line Programmer MSP Flasher is an open-source shell-based interface for programming MSP microcontrollers through a FET programmer or eZ430 using JTAG or Spy-Bi-Wire (SBW) communication. MSP Flasher can download binary files (.txt or .hex) files directly to the MSP microcontroller without an IDE.

MSP MCU Programmer and Debugger The MSP-FET is a powerful emulation development tool – often called a debug probe – which allows users to quickly begin application development on MSP low-power microcontrollers (MCU). Creating MCU software usually requires downloading the resulting binary program to the MSP device for validation and debugging. The MSP-FET provides a debug communication pathway between a host computer and the target MSP. Furthermore, the MSP-FET also provides a Backchannel UART connection between the computer's USB interface and the MSP UART. This affords the MSP programmer a convenient method for communicating serially between the MSP and a terminal running on the computer. It also supports loading programs (often called firmware) to the MSP target using the BSL (bootloader) through the UART and I^2C communication protocols.

MSP-GANG Production Programmer The MSP Gang Programmer is an MSP430 or MSP432 device programmer that can program up to eight identical MSP430 or MSP432 Flash or FRAM devices at the same time. The MSP Gang Programmer connects to a host PC using a standard RS-232 or USB connection and provides flexible programming options that allow the user to fully customize the process. The MSP Gang Programmer is provided with an expansion board, called the Gang Splitter, that implements the interconnections between the MSP Gang Programmer and multiple target devices. Eight cables are provided that connect the expansion board to eight target devices (through JTAG or Spy-Bi-Wire connectors). The programming can be done with a PC or as a stand-alone device. A PC-side graphical user interface is also available and is DLL-based.

7.4 Documentation Support

The following documents describe the MSP430F5310 and MSP430F530x devices. Copies of these documents are available on the Internet at www.ti.com.

Receiving Notification of Document Updates

To receive notification of documentation updates—including silicon errata—go to the product folder for your device on ti.com (for links to the product folders, see Table 7-2). In the upper right corner, click the "Alert me" button. This registers you to receive a weekly digest of product information that has changed (if any). For change details, check the revision history of any revised document.

Errata

MSP430F5310 Device Erratasheet Describes the known exceptions to the functional specifications for the MSP430F5310 device.

MSP430F5309 Device Erratasheet Describes the known exceptions to the functional specifications for the MSP430F5309 device.

MSP430F5308 Device Erratasheet Describes the known exceptions to the functional specifications for the MSP430F5308 device.

MSP430F5304 Device Erratasheet Describes the known exceptions to the functional specifications for the MSP430F5304 device.

User's Guides

MSP430F5xx and MSP430F6xx Family User's Guide Detailed information on the modules and peripherals available in this device family.

MSP430 Flash Device Bootloader (BSL) User's Guide The MSP430 bootloader (BSL) lets users communicate with embedded memory in the MSP430 microcontroller during the prototyping phase, final production, and in service. Both the programmable memory (flash memory) and the data memory (RAM) can be modified as required. Do not confuse the bootloader with the bootstrap loader programs found in some digital signal processors (DSPs) that automatically load program code (and data) from external memory to the internal memory of the DSP.

MSP430 Programming With the JTAG Interface This document describes the functions that are required to erase, program, and verify the memory module of the MSP430 flash-based and FRAM-based microcontroller families using the JTAG communication port. In addition, it describes how to program the JTAG access security fuse that is available on all MSP430 devices. This document describes device access using both the standard 4-wire JTAG interface and the 2-wire JTAG interface, which is also referred to as Spy-Bi-Wire (SBW).

MSP430 Hardware Tools User's Guide This manual describes the hardware of the TI MSP-FET430 Flash Emulation Tool (FET). The FET is the program development tool for the MSP430 ultra-low-power microcontroller. Both available interface types, the parallel port interface and the USB interface, are described.

Application Reports

MSP430 32-kHz Crystal Oscillators Selection of the right crystal, correct load circuit, and proper board layout are important for a stable crystal oscillator. This application report summarizes crystal oscillator function and explains the parameters to select the correct crystal for MSP430 ultra-low-power operation. In addition, hints and examples for correct board layout are given. The document also contains detailed information on the possible oscillator tests to ensure stable oscillator operation in mass production.

MSP430 System-Level ESD Considerations System-level ESD has become increasingly demanding as silicon technology scales to lower voltages and the need for designing cost-effective and ultra-low-power components. This application report addresses three ESD topics to help board designers and OEMs understand and design robust system-level designs: (1) Component-level ESD testing and system-level ESD testing; (2) General design guidelines for system-level ESD protection; (3) Introduction to System Efficient ESD Design (SEED), a co-design methodology of on-board and on-chip ESD protection. A few real-world system-level ESD protection design examples and their results are discussed.

Copyright © 2010–2020, Texas Instruments Incorporated

7.5 Related Links

Table 7-2 lists quick access links. Categories include technical documents, support and community resources, tools and software, and quick access to sample or buy.

Table 7-2. Related Links

PARTS	PRODUCT FOLDER	ORDER NOW	TECHNICAL DOCUMENTS	TOOLS & SOFTWARE	SUPPORT & COMMUNITY
MSP430F5310	Click here	Click here	Click here	Click here	Click here
MSP430F5309	Click here	Click here	Click here	Click here	Click here
MSP430F5308	Click here	Click here	Click here	Click here	Click here
MSP430F5304	Click here	Click here	Click here	Click here	Click here

7.6 Community Resources

The following links connect to TI community resources. Linked contents are provided "AS IS" by the respective contributors. They do not constitute TI specifications and do not necessarily reflect TI's views; see TI's Terms of Use.

TI E2E™ Community
TI's Engineer-to-Engineer (E2E) Community. Created to foster collaboration among engineers. At e2e.ti.com, you can ask questions, share knowledge, explore ideas, and help solve problems with fellow engineers.

TI Embedded Processors Wiki
Texas Instruments Embedded Processors Wiki. Established to help developers get started with embedded processors from Texas Instruments and to foster innovation and growth of general knowledge about the hardware and software surrounding these devices.

7.7 Trademarks

MicroStar Junior, MSP430Ware, EnergyTrace, ULP Advisor, Code Composer Studio, E2E are trademarks of Texas Instruments.
All other trademarks are the property of their respective owners.

7.8 Electrostatic Discharge Caution

This integrated circuit can be damaged by ESD. Texas Instruments recommends that all integrated circuits be handled with appropriate precautions. Failure to observe proper handling and installation procedures can cause damage.

ESD damage can range from subtle performance degradation to complete device failure. Precision integrated circuits may be more susceptible to damage because very small parametric changes could cause the device not to meet its published specifications.

7.9 Glossary

TI Glossary This glossary lists and explains terms, acronyms, and definitions.

8 Mechanical, Packaging, and Orderable Information

The following pages include mechanical, packaging, and orderable information. This information is the most current data available for the designated devices. This data is subject to change without notice and revision of this document. For browser-based versions of this data sheet, refer to the left-hand navigation.

Copyright © 2010–2020, Texas Instruments Incorporated

PACKAGING INFORMATION

Orderable Device	Status (1)	Package Type	Package Drawing	Pins	Package Qty	Eco Plan (2)	Lead/Ball Finish (6)	MSL Peak Temp (3)	Op Temp (°C)	Device Marking (4/5)	Samples
MSP430F5304IPT	ACTIVE	LQFP	PT	48	250	Green (RoHS & no Sb/Br)	NIPDAU	Level-3-260C-168 HR	-40 to 85	M430F5304	Samples
MSP430F5304IPTR	ACTIVE	LQFP	PT	48	1000	Green (RoHS & no Sb/Br)	NIPDAU	Level-3-260C-168 HR	-40 to 85	M430F5304	Samples
MSP430F5304IRGZR	ACTIVE	VQFN	RGZ	48	2500	Green (RoHS & no Sb/Br)	NIPDAU	Level-3-260C-168 HR	-40 to 85	M430 F5304	Samples
MSP430F5304IRGZT	ACTIVE	VQFN	RGZ	48	250	Green (RoHS & no Sb/Br)	NIPDAU	Level-3-260C-168 HR	-40 to 85	M430 F5304	Samples
MSP430F5308IPT	ACTIVE	LQFP	PT	48	250	Green (RoHS & no Sb/Br)	NIPDAU	Level-3-260C-168 HR	-40 to 85	M430F5308	Samples
MSP430F5308IPTR	ACTIVE	LQFP	PT	48	1000	Green (RoHS & no Sb/Br)	NIPDAU	Level-3-260C-168 HR	-40 to 85	M430F5308	Samples
MSP430F5308IRGCR	ACTIVE	VQFN	RGC	64	2000	Green (RoHS & no Sb/Br)	NIPDAU	Level-3-260C-168 HR	-40 to 85	M430F5308	Samples
MSP430F5308IRGCT	ACTIVE	VQFN	RGC	64	250	Green (RoHS & no Sb/Br)	NIPDAU	Level-3-260C-168 HR	-40 to 85	M430F5308	Samples
MSP430F5308IRGZR	ACTIVE	VQFN	RGZ	48	2500	Green (RoHS & no Sb/Br)	NIPDAU	Level-3-260C-168 HR	-40 to 85	M430 F5308	Samples
MSP430F5308IRGZT	ACTIVE	VQFN	RGZ	48	250	Green (RoHS & no Sb/Br)	NIPDAU	Level-3-260C-168 HR	-40 to 85	M430 F5308	Samples
MSP430F5308IZXH	ACTIVE	NFBGA	ZXH	80	490	TBD	Call TI	Call TI	-40 to 85	F5308	Samples
MSP430F5308IZXHR	ACTIVE	NFBGA	ZXH	80	2500	TBD	Call TI	Call TI	-40 to 85	F5308	Samples
MSP430F5309IPT	ACTIVE	LQFP	PT	48	250	Green (RoHS & no Sb/Br)	NIPDAU	Level-3-260C-168 HR	-40 to 85	M430F5309	Samples
MSP430F5309IRGCR	ACTIVE	VQFN	RGC	64	2000	Green (RoHS & no Sb/Br)	NIPDAU	Level-3-260C-168 HR	-40 to 85	M430F5309	Samples
MSP430F5309IRGCT	ACTIVE	VQFN	RGC	64	250	Green (RoHS & no Sb/Br)	NIPDAU	Level-3-260C-168 HR	-40 to 85	M430F5309	Samples
MSP430F5309IRGZR	ACTIVE	VQFN	RGZ	48	2500	Green (RoHS & no Sb/Br)	NIPDAU	Level-3-260C-168 HR	-40 to 85	M430 F5309	Samples
MSP430F5309IRGZT	ACTIVE	VQFN	RGZ	48	250	Green (RoHS & no Sb/Br)	NIPDAU	Level-3-260C-168 HR	-40 to 85	M430 F5309	Samples

Orderable Device	Status (1)	Package Type	Package Drawing	Pins	Package Qty	Eco Plan (2)	Lead/Ball Finish (6)	MSL Peak Temp (3)	Op Temp (°C)	Device Marking (4/5)	Samples
MSP430F5309IZXH	ACTIVE	NFBGA	ZXH	80	490	TBD	Call TI	Call TI	-40 to 85	F5309	Samples
MSP430F5309IZXHR	ACTIVE	NFBGA	ZXH	80	2500	TBD	Call TI	Call TI	-40 to 85	F5309	Samples
MSP430F5310IPT	ACTIVE	LQFP	PT	48	250	Green (RoHS & no Sb/Br)	NIPDAU	Level-3-260C-168 HR	-40 to 85	M430F5310	Samples
MSP430F5310IPTR	ACTIVE	LQFP	PT	48	1000	Green (RoHS & no Sb/Br)	NIPDAU	Level-3-260C-168 HR	-40 to 85	M430F5310	Samples
MSP430F5310IRGCR	ACTIVE	VQFN	RGC	64	2000	Green (RoHS & no Sb/Br)	NIPDAU	Level-3-260C-168 HR	-40 to 85	M430F5310	Samples
MSP430F5310IRGCT	ACTIVE	VQFN	RGC	64	250	Green (RoHS & no Sb/Br)	NIPDAU	Level-3-260C-168 HR	-40 to 85	M430F5310	Samples
MSP430F5310IRGZR	ACTIVE	VQFN	RGZ	48	2500	Green (RoHS & no Sb/Br)	NIPDAU	Level-3-260C-168 HR	-40 to 85	M430 F5310	Samples
MSP430F5310IRGZT	ACTIVE	VQFN	RGZ	48	250	Green (RoHS & no Sb/Br)	NIPDAU	Level-3-260C-168 HR	-40 to 85	M430 F5310	Samples
MSP430F5310IZXH	ACTIVE	NFBGA	ZXH	80	490	TBD	Call TI	Call TI	-40 to 85	F5310	Samples
MSP430F5310IZXHR	ACTIVE	NFBGA	ZXH	80	2500	TBD	Call TI	Call TI	-40 to 85	F5310	Samples

(1) The marketing status values are defined as follows:
ACTIVE: Product device recommended for new designs.
LIFEBUY: TI has announced that the device will be discontinued, and a lifetime-buy period is in effect.
NRND: Not recommended for new designs. Device is in production to support existing customers, but TI does not recommend using this part in a new design.
PREVIEW: Device has been announced but is not in production. Samples may or may not be available.
OBSOLETE: TI has discontinued the production of the device.

(2) **RoHS:** TI defines "RoHS" to mean semiconductor products that are compliant with the current EU RoHS requirements for all 10 RoHS substances, including the requirement that RoHS substance do not exceed 0.1% by weight in homogeneous materials. Where designed to be soldered at high temperatures, "RoHS" products are suitable for use in specified lead-free processes. TI may reference these types of products as "Pb-Free".
RoHS Exempt: TI defines "RoHS Exempt" to mean products that contain lead but are compliant with EU RoHS pursuant to a specific EU RoHS exemption.
Green: TI defines "Green" to mean the content of Chlorine (Cl) and Bromine (Br) based flame retardants meet JS709B low halogen requirements of <=1000ppm threshold. Antimony trioxide based flame retardants must also meet the <=1000ppm threshold requirement.

(3) MSL, Peak Temp. - The Moisture Sensitivity Level rating according to the JEDEC industry standard classifications, and peak solder temperature.

(4) There may be additional marking, which relates to the logo, the lot trace code information, or the environmental category on the device.

(5) Multiple Device Markings will be inside parentheses. Only one Device Marking contained in parentheses and separated by a "~" will appear on a device. If a line is indented then it is a continuation of the previous line and the two combined represent the entire Device Marking for that device.

(6) Lead/Ball Finish - Orderable Devices may have multiple material finish options. Finish options are separated by a vertical ruled line. Lead/Ball Finish values may wrap to two lines if the finish value exceeds the maximum column width.

Important Information and Disclaimer: The information provided on this page represents TI's knowledge and belief as of the date that it is provided. TI bases its knowledge and belief on information provided by third parties, and makes no representation or warranty as to the accuracy of such information. Efforts are underway to better integrate information from third parties. TI has taken and continues to take reasonable steps to provide representative and accurate information but may not have conducted destructive testing or chemical analysis on incoming materials and chemicals. TI and TI suppliers consider certain information to be proprietary, and thus CAS numbers and other limited information may not be available for release.

In no event shall TI's liability arising out of such information exceed the total purchase price of the TI part(s) at issue in this document sold by TI to Customer on an annual basis.

TAPE AND REEL INFORMATION

REEL DIMENSIONS

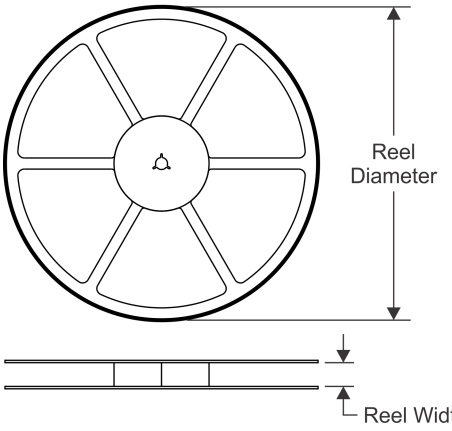

TAPE DIMENSIONS

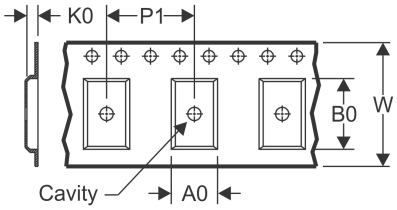

A0	Dimension designed to accommodate the component width
B0	Dimension designed to accommodate the component length
K0	Dimension designed to accommodate the component thickness
W	Overall width of the carrier tape
P1	Pitch between successive cavity centers

QUADRANT ASSIGNMENTS FOR PIN 1 ORIENTATION IN TAPE

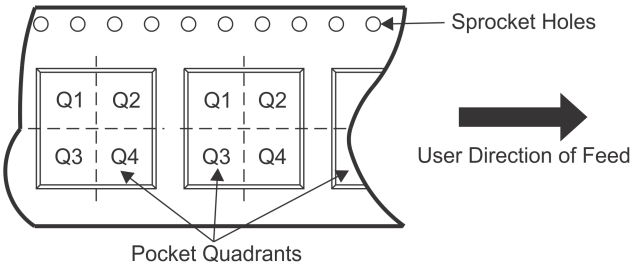

*All dimensions are nominal

Device	Package Type	Package Drawing	Pins	SPQ	Reel Diameter (mm)	Reel Width W1 (mm)	A0 (mm)	B0 (mm)	K0 (mm)	P1 (mm)	W (mm)	Pin1 Quadrant
MSP430F5304IPTR	LQFP	PT	48	1000	330.0	16.4	9.6	9.6	1.9	12.0	16.0	Q2
MSP430F5304IRGZT	VQFN	RGZ	48	250	180.0	16.4	7.3	7.3	1.5	12.0	16.0	Q2
MSP430F5308IPTR	LQFP	PT	48	1000	330.0	16.4	9.6	9.6	1.9	12.0	16.0	Q2
MSP430F5308IRGCR	VQFN	RGC	64	2000	330.0	16.4	9.3	9.3	1.5	12.0	16.0	Q2
MSP430F5308IRGCT	VQFN	RGC	64	250	180.0	16.4	9.3	9.3	1.5	12.0	16.0	Q2
MSP430F5308IRGZR	VQFN	RGZ	48	2500	330.0	16.4	7.3	7.3	1.5	12.0	16.0	Q2
MSP430F5308IRGZT	VQFN	RGZ	48	250	180.0	16.4	7.3	7.3	1.5	12.0	16.0	Q2
MSP430F5309IRGCR	VQFN	RGC	64	2000	330.0	16.4	9.3	9.3	1.5	12.0	16.0	Q2
MSP430F5309IRGCT	VQFN	RGC	64	250	180.0	16.4	9.3	9.3	1.5	12.0	16.0	Q2
MSP430F5309IRGZT	VQFN	RGZ	48	250	180.0	16.4	7.3	7.3	1.5	12.0	16.0	Q2
MSP430F5310IPTR	LQFP	PT	48	1000	330.0	16.4	9.6	9.6	1.9	12.0	16.0	Q2
MSP430F5310IRGCT	VQFN	RGC	64	250	180.0	16.4	9.3	9.3	1.5	12.0	16.0	Q2
MSP430F5310IRGZT	VQFN	RGZ	48	250	180.0	16.4	7.3	7.3	1.5	12.0	16.0	Q2

TAPE AND REEL BOX DIMENSIONS

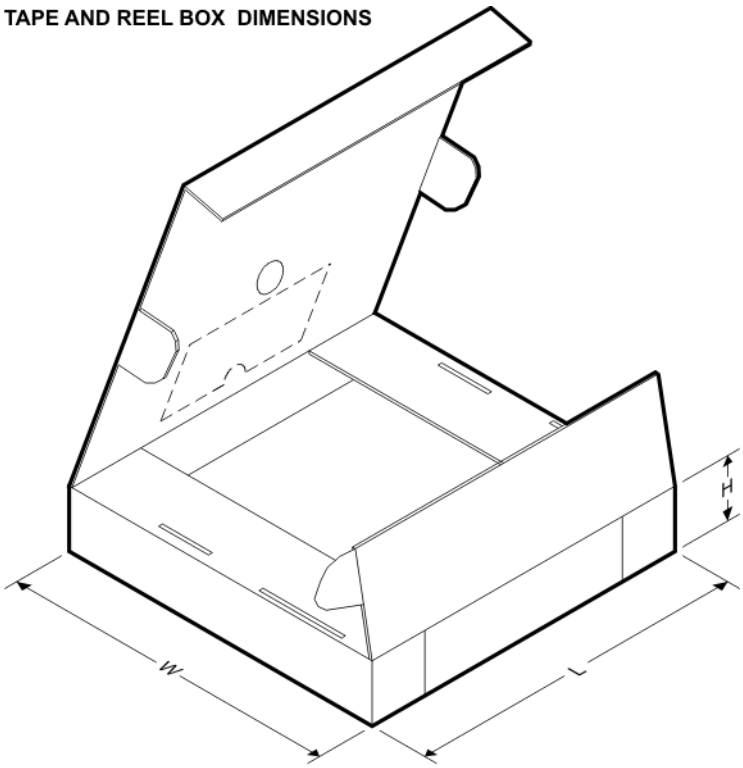

*All dimensions are nominal

Device	Package Type	Package Drawing	Pins	SPQ	Length (mm)	Width (mm)	Height (mm)
MSP430F5304IPTR	LQFP	PT	48	1000	350.0	350.0	43.0
MSP430F5304IRGZT	VQFN	RGZ	48	250	210.0	185.0	35.0
MSP430F5308IPTR	LQFP	PT	48	1000	350.0	350.0	43.0
MSP430F5308IRGCR	VQFN	RGC	64	2000	367.0	367.0	38.0
MSP430F5308IRGCT	VQFN	RGC	64	250	210.0	185.0	35.0
MSP430F5308IRGZR	VQFN	RGZ	48	2500	367.0	367.0	38.0
MSP430F5308IRGZT	VQFN	RGZ	48	250	210.0	185.0	35.0
MSP430F5309IRGCR	VQFN	RGC	64	2000	367.0	367.0	38.0
MSP430F5309IRGCT	VQFN	RGC	64	250	210.0	185.0	35.0
MSP430F5309IRGZT	VQFN	RGZ	48	250	210.0	185.0	35.0
MSP430F5310IPTR	LQFP	PT	48	1000	350.0	350.0	43.0
MSP430F5310IRGCT	VQFN	RGC	64	250	210.0	185.0	35.0
MSP430F5310IRGZT	VQFN	RGZ	48	250	210.0	185.0	35.0

GENERIC PACKAGE VIEW

RGZ 48

VQFN - 1 mm max height

7 x 7, 0.5 mm pitch

PLASTIC QUADFLAT PACK- NO LEAD

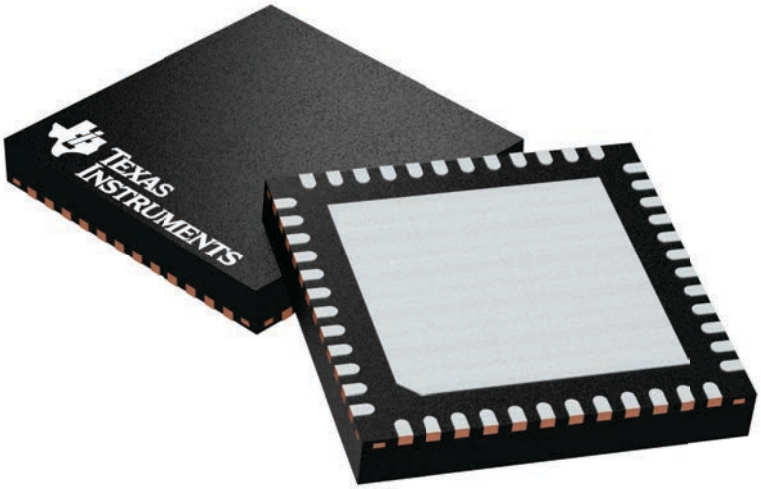

Images above are just a representation of the package family, actual package may vary.
Refer to the product data sheet for package details.

4224671/A

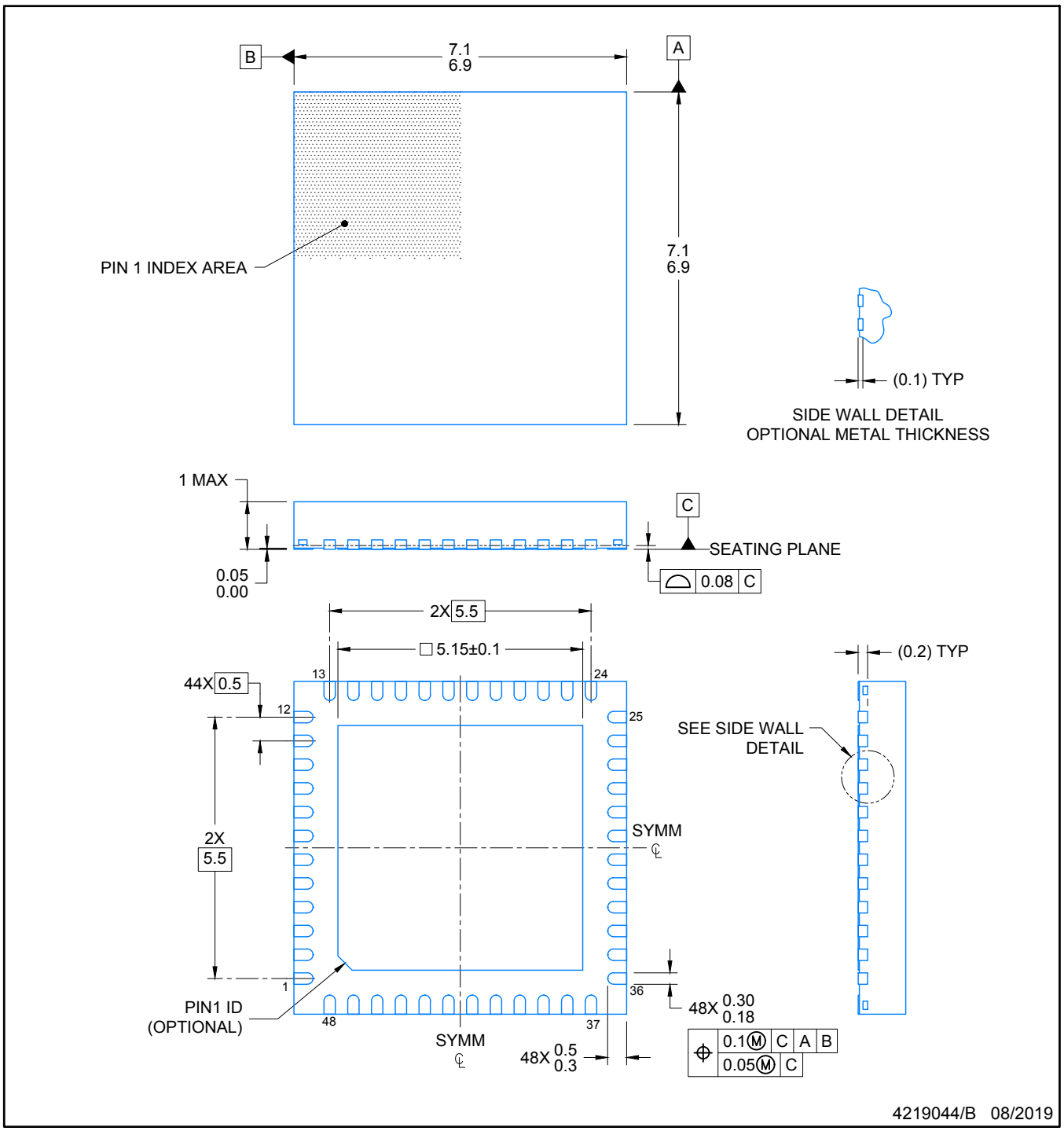

NOTES:

1. All linear dimensions are in millimeters. Any dimensions in parenthesis are for reference only. Dimensioning and tolerancing per ASME Y14.5M.
2. This drawing is subject to change without notice.
3. The package thermal pad must be soldered to the printed circuit board for optimal thermal and mechanical performance.

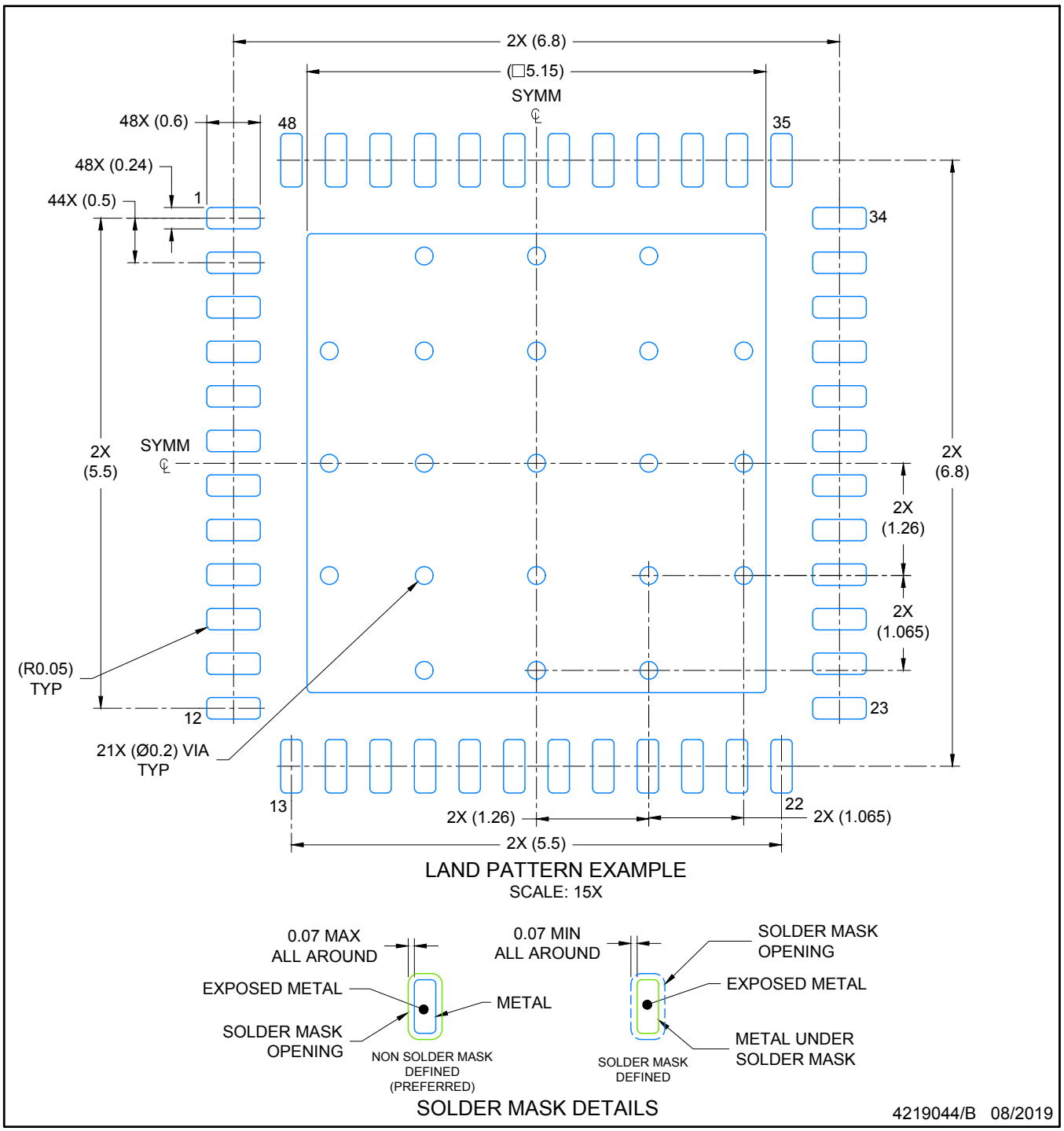

NOTES: (continued)

4. This package is designed to be soldered to a thermal pad on the board. For more information, see Texas Instruments literature number SLUA271 (www.ti.com/lit/slua271).
5. Vias are optional depending on application, refer to device data sheet. If any vias are implemented, refer to their locations shown on this view. It is recommended that vias under paste be filled, plugged or tented.

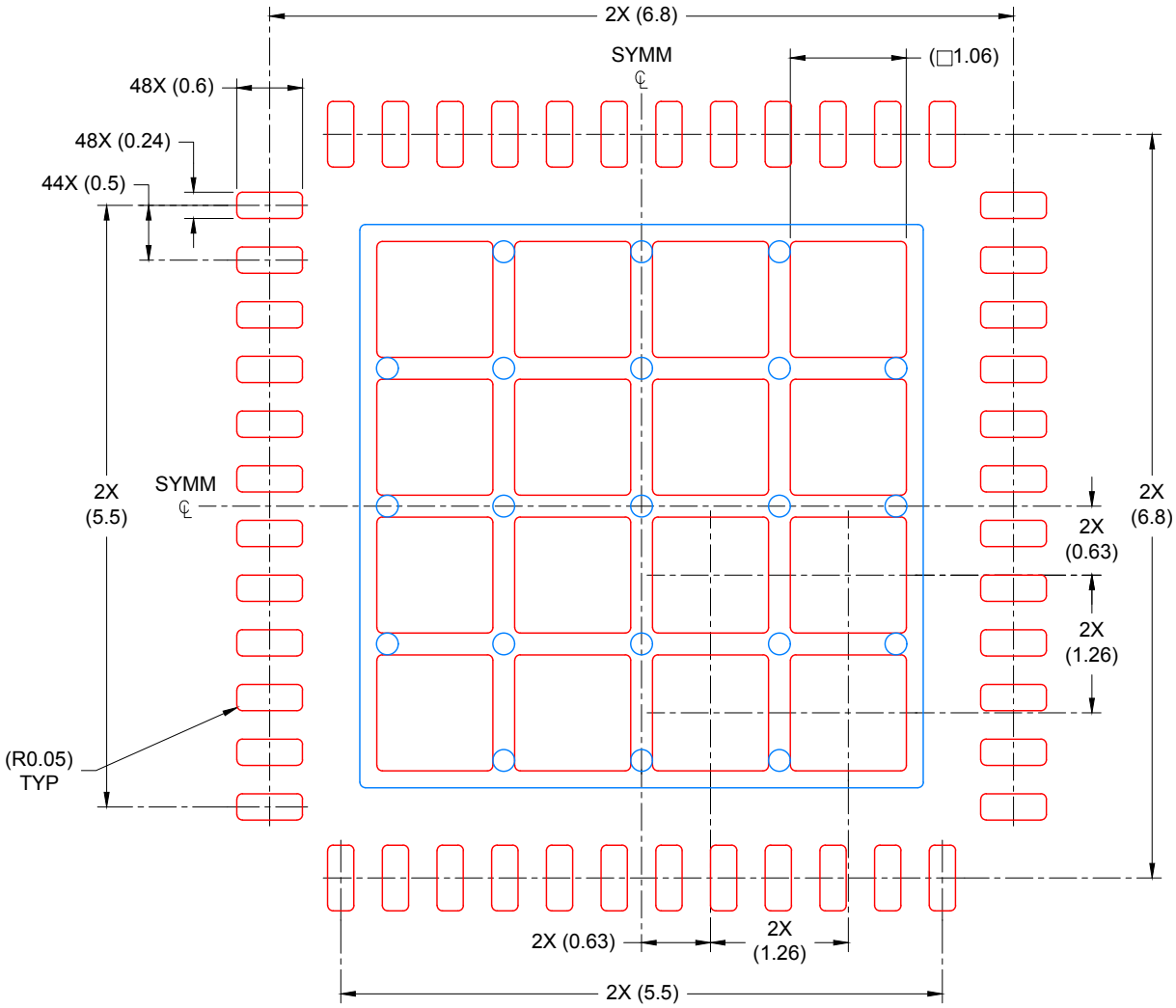

SOLDER PASTE EXAMPLE
BASED ON 0.125 mm THICK STENCIL

EXPOSED PAD
67% PRINTED COVERAGE BY AREA
SCALE: 15X

4219044/B 08/2019

NOTES: (continued)

6. Laser cutting apertures with trapezoidal walls and rounded corners may offer better paste release. IPC-7525 may have alternate design recommendations.

PT (S-PQFP-G48) **PLASTIC QUAD FLATPACK**

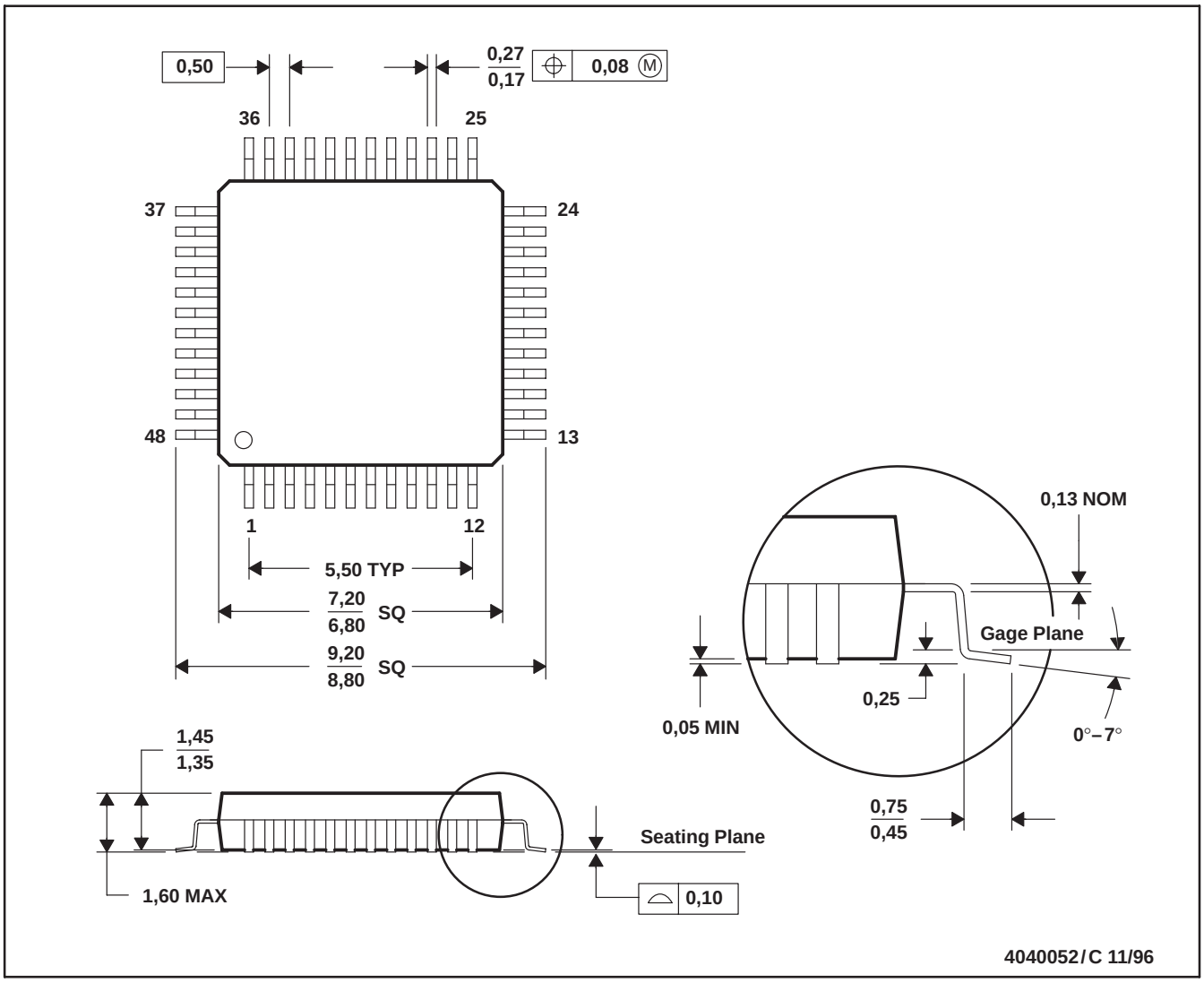

NOTES: A. All linear dimensions are in millimeters.
B. This drawing is subject to change without notice.
C. Falls within JEDEC MS-026
D. This may also be a thermally enhanced plastic package with leads conected to the die pads.

GENERIC PACKAGE VIEW

RGC 64

VQFN - 1 mm max height

9 x 9, 0.5 mm pitch

PLASTIC QUAD FLATPACK - NO LEAD

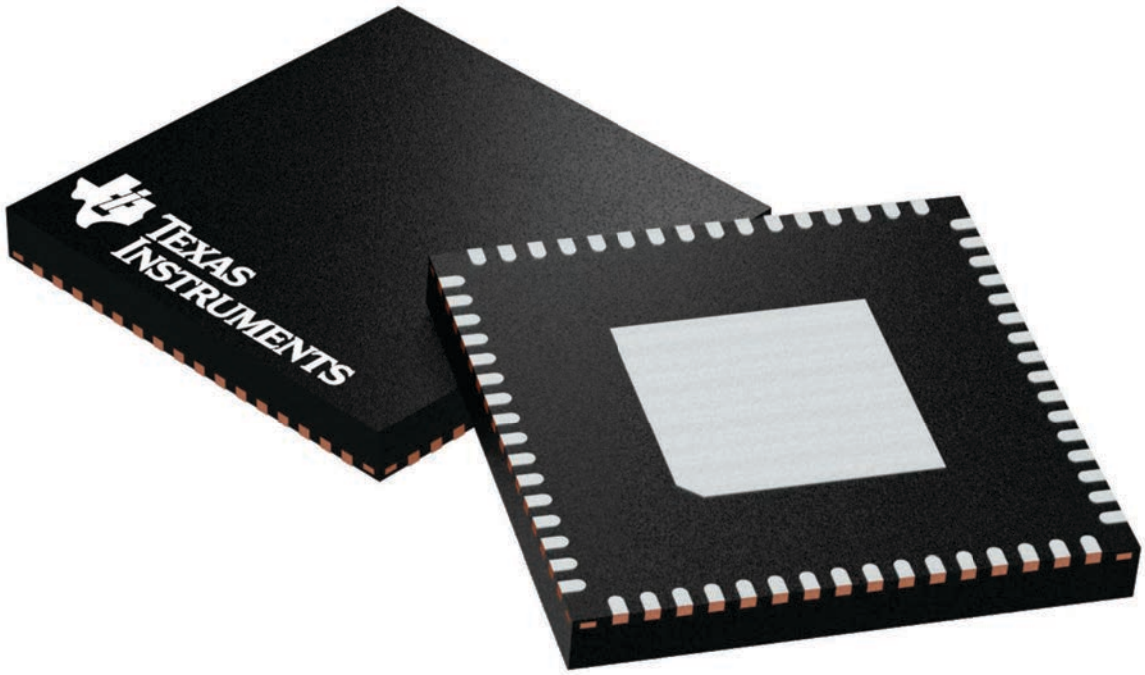

Images above are just a representation of the package family, actual package may vary.
Refer to the product data sheet for package details.

4224597/A

PACKAGE OUTLINE

RGC0064B

VQFN - 1 mm max height

PLASTIC QUAD FLATPACK - NO LEAD

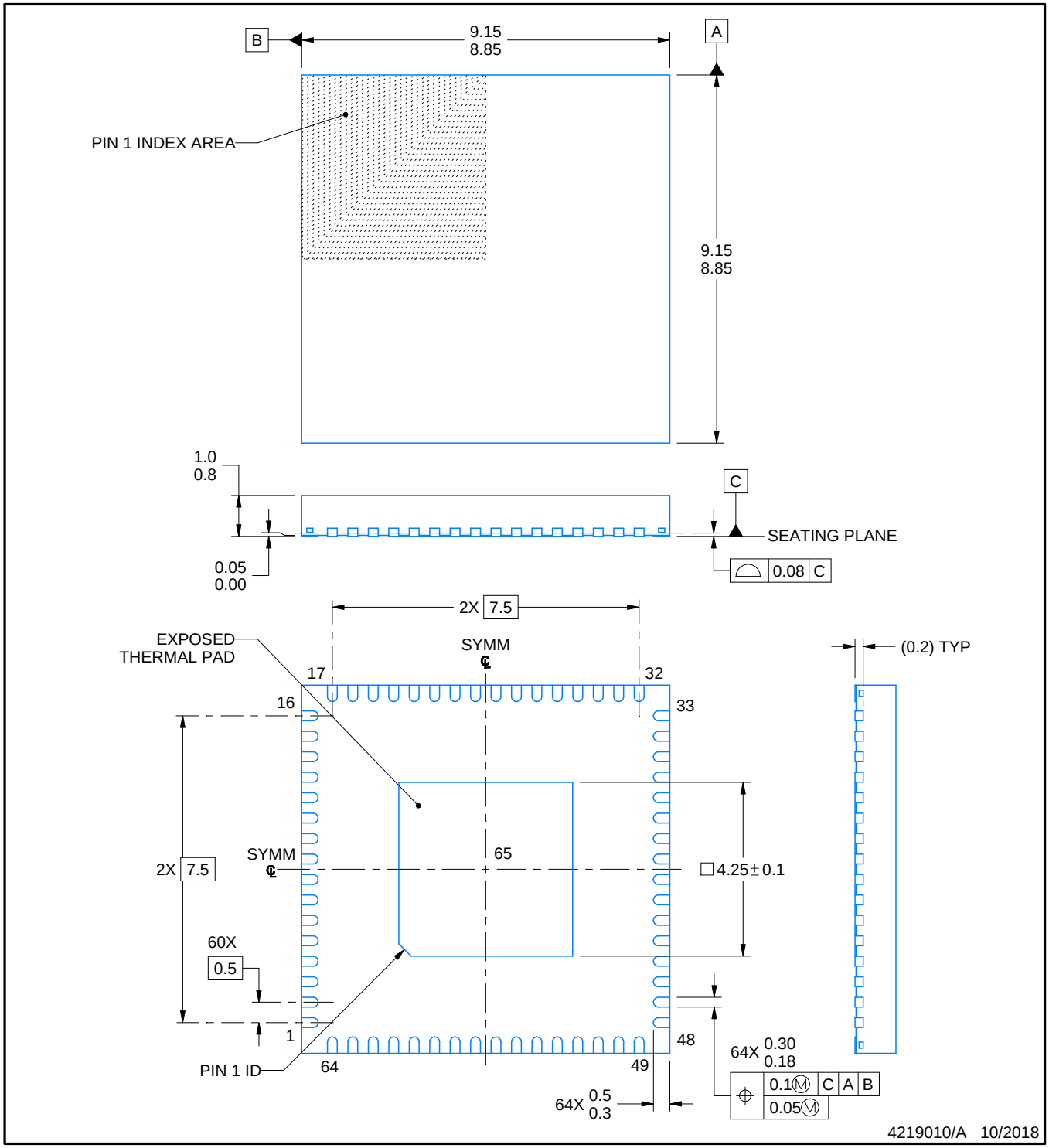

NOTES:

1. All linear dimensions are in millimeters. Any dimensions in parenthesis are for reference only. Dimensioning and tolerancing per ASME Y14.5M.
2. This drawing is subject to change without notice.
3. The package thermal pad must be soldered to the printed circuit board for thermal and mechanical performance.

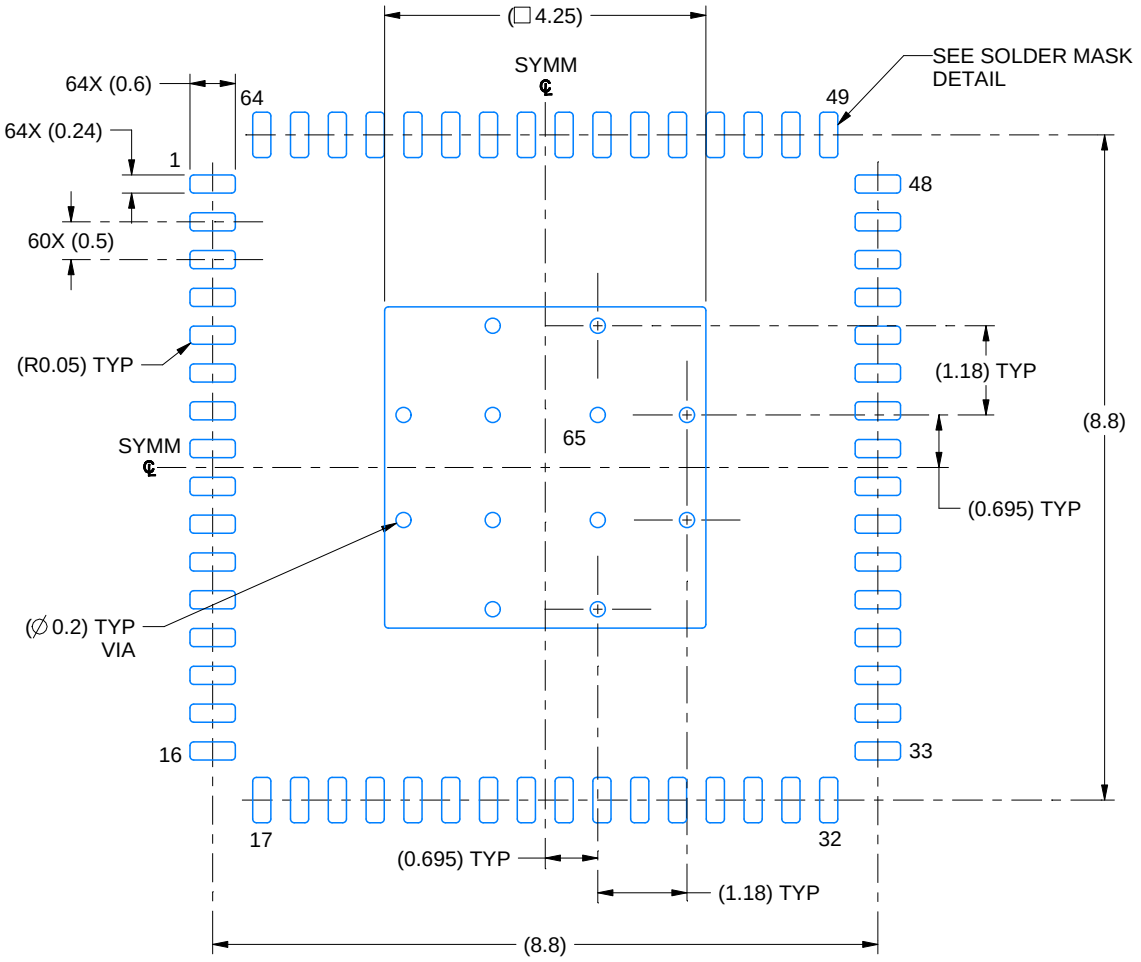

LAND PATTERN EXAMPLE
EXPOSED METAL SHOWN
SCALE: 10X

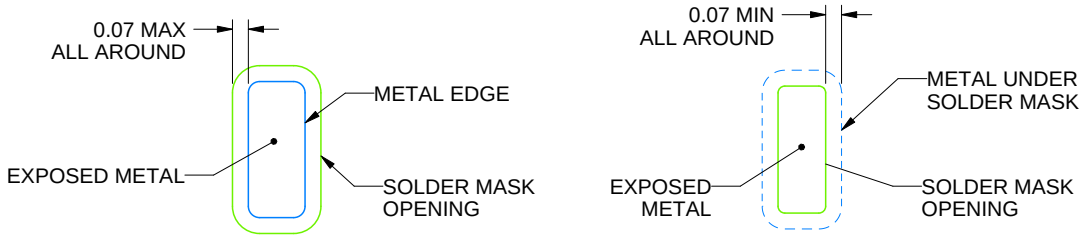

NON SOLDER MASK DEFINED (PREFERRED)

SOLDER MASK DEFINED

SOLDER MASK DETAILS

4219010/A 10/2018

NOTES: (continued)

4. This package is designed to be soldered to a thermal pad on the board. For more information, see Texas Instruments literature number SLUA271 (www.ti.com/lit/slua271).
5. Vias are optional depending on application, refer to device data sheet. If any vias are implemented, refer to their locations shown on this view. It is recommended that vias under paste be filled, plugged or tented.

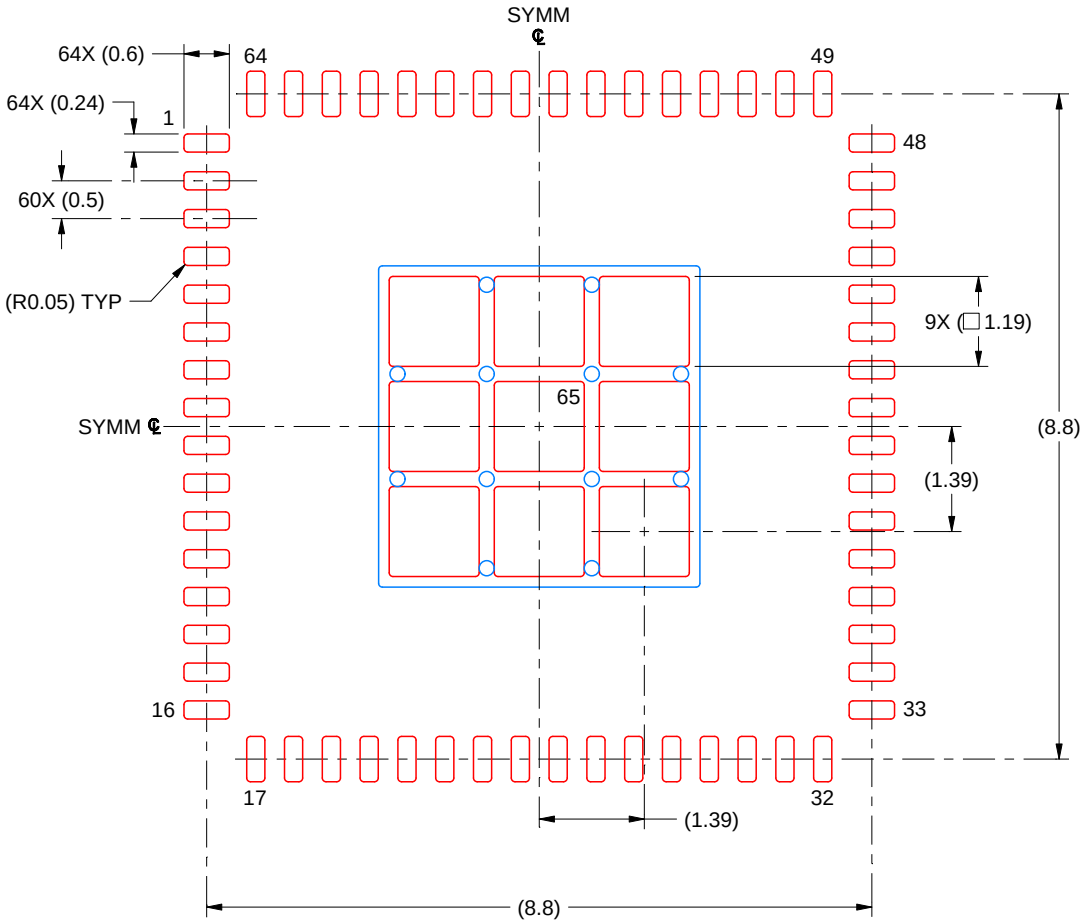

SOLDER PASTE EXAMPLE
BASED ON 0.125 MM THICK STENCIL
SCALE: 10X

EXPOSED PAD 65
71% PRINTED SOLDER COVERAGE BY AREA UNDER PACKAGE

4219010/A 10/2018

NOTES: (continued)

6. Laser cutting apertures with trapezoidal walls and rounded corners may offer better paste release. IPC-7525 may have alternate design recommendations.

IMPORTANT NOTICE AND DISCLAIMER

TI PROVIDES TECHNICAL AND RELIABILITY DATA (INCLUDING DATASHEETS), DESIGN RESOURCES (INCLUDING REFERENCE DESIGNS), APPLICATION OR OTHER DESIGN ADVICE, WEB TOOLS, SAFETY INFORMATION, AND OTHER RESOURCES “AS IS” AND WITH ALL FAULTS, AND DISCLAIMS ALL WARRANTIES, EXPRESS AND IMPLIED, INCLUDING WITHOUT LIMITATION ANY IMPLIED WARRANTIES OF MERCHANTABILITY, FITNESS FOR A PARTICULAR PURPOSE OR NON-INFRINGEMENT OF THIRD PARTY INTELLECTUAL PROPERTY RIGHTS.

These resources are intended for skilled developers designing with TI products. You are solely responsible for (1) selecting the appropriate TI products for your application, (2) designing, validating and testing your application, and (3) ensuring your application meets applicable standards, and any other safety, security, or other requirements. These resources are subject to change without notice. TI grants you permission to use these resources only for development of an application that uses the TI products described in the resource. Other reproduction and display of these resources is prohibited. No license is granted to any other TI intellectual property right or to any third party intellectual property right. TI disclaims responsibility for, and you will fully indemnify TI and its representatives against, any claims, damages, costs, losses, and liabilities arising out of your use of these resources.

TI’s products are provided subject to TI’s Terms of Sale (www.ti.com/legal/termsofsale.html) or other applicable terms available either on ti.com or provided in conjunction with such TI products. TI’s provision of these resources does not expand or otherwise alter TI’s applicable warranties or warranty disclaimers for TI products.

Mailing Address: Texas Instruments, Post Office Box 655303, Dallas, Texas 75265
Copyright © 2020, Texas Instruments Incorporated