molex
one company › a world of innovation

This document was generated on 03/31/2010

PLEASE CHECK WWW.MOLEX.COM FOR LATEST PART INFORMATION

Part Number: 0025026024

Status: Active

Description: 2.54mm (.100") Pitch C-Grid® Header, Dual Row, Shrouded, with PC Slot and Guide Ear, 24 Circuits, 0.38µm (15µ") Gold (Au) Selective Plating

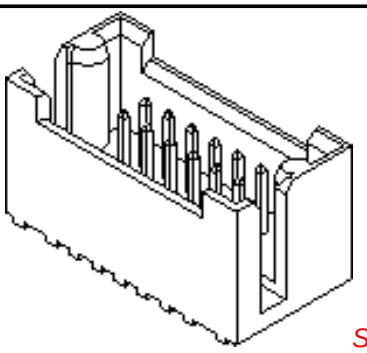

Series
image - Reference only

Documents:

3D Model
Drawing (PDF)
Product Specification PS-70204 (PDF)
RoHS Certificate of Compliance (PDF)

Agency Certification

CSA	LR19980
UL	E29179

General

Product Family	PCB Headers
Series	70204
Application	Board-to-Board
Product Name	C-Grid®

Physical

Breakaway	No
Circuits (Loaded)	24
Circuits (maximum)	24
Color - Resin	Black
Durability (mating cycles max)	50
Flammability	94V-0
Glow-Wire Compliant	No
Guide to Mating Part	Yes
Lock to Mating Part	None
Material - Metal	Brass, Phosphor Bronze
Material - Plating Mating	Gold
Material - Plating Termination	Tin
Material - Resin	Nylon
Number of Rows	2
Orientation	Vertical
PC Tail Length (in)	0.110 In
PC Tail Length (mm)	2.79 mm
PCB Locator	No
PCB Retention	None
Packaging Type	Tray
Pitch - Mating Interface (in)	0.100 In
Pitch - Mating Interface (mm)	2.54 mm
Plating min: Mating (µin)	15
Plating min: Mating (µm)	0.38
Plating min: Termination (µin)	75
Plating min: Termination (µm)	1.91
Polarized to Mating Part	Yes
Polarized to PCB	No
Shrouded	Fully
Stackable	No
Temperature Range - Operating	-40°C to +105°C
Termination Interface: Style	Through Hole

Electrical

Current - Maximum per Contact	3A
Voltage - Maximum	250V

EU RoHS
ELV and RoHS Compliant

China RoHS

REACH SVHC
Contains SVHC: No

Halogen-Free Status
Not Reviewed

Need more information on product environmental compliance?

Email productcompliance@molex.com
For a multiple part number RoHS Certificate of Compliance, click here

Please visit the Contact Us section for any non-product compliance questions.

Search Parts in this Series
70204Series

Mates With
71973

Solder Process Data

Duration at Max. Process Temperature (seconds)	5
Lead-free Process Capability	Wave Capable (TH only)
Max. Cycles at Max. Process Temperature	1
Process Temperature max. C	245

Material Info

Old Part Number	70204-0267

Reference - Drawing Numbers

Product Specification	PS-70204
Sales Drawing	SDA-70204-0257-0320

This document was generated on 03/31/2010

PLEASE CHECK WWW.MOLEX.COM FOR LATEST PART INFORMATION

CKT. SIZE	PART NUMBER	ENG. NUMBER SDA-70204-	DIM. "A" MM	DIM. "A" IN.	DIM. "B" MM	DIM. "B" IN.	DIM. "C" MM	DIM. "C" IN.
08	25-02-6008	0259	7,62	.300	17,78	.700	20,32	.800
10	25-02-6010	0260	10,16	.400	20,32	.800	22,86	.900
12	25-02-6012	0261	12,70	.500	22,86	.900	25,40	1.000
14	25-02-6014	0262	15,24	.600	25,40	1.000	32,51	1.100
16	25-02-6016	0263	17,78	.700	27,94	1.100	30,48	1.200
18	25-02-6018	0264	20,32	.800	30,48	1.200	33,02	1.300
20	25-02-6020	0265	22,86	.900	33,02	1.300	35,56	1.400
22	25-02-6022	0266	25,40	1.000	35,56	1.400	38,10	1.500
24	25-02-6024	0267	27,94	1.100	38,10	1.500	40,64	1.600
26	25-02-6026	0268	30,48	1.200	40,64	1.600	43,10	1.700
28	25-02-6028	0269	33,02	1.300	43,10	1.700	45,72	1.800
30	25-02-6030	0270	35,56	1.400	45,72	1.800	48,26	1.900
32	25-02-6032	0271	38,10	1.500	48,26	1.900	50,80	2.000
34	25-02-6034	0272	40,64	1.600	50,80	2.000	53,34	2.100
36	25-02-6036	0273	43,10	1.700	53,34	2.100	55,88	2.200
38	25-02-6038	0274	45,72	1.800	55,88	2.200	58,42	2.300
40	25-02-6040	0275	48,26	1.900	58,42	2.300	60,96	2.400

CKT. SIZE	PART NUMBER	ENG. NUMBER SDA-70204-	DIM. "A" MM	DIM. "A" IN.	DIM. "B" MM	DIM. "B" IN.	DIM. "C" MM	DIM. "C" IN.
42	25-02-6042	0276	50,80	2.000	60,96	2.400	63,50	2.500
44	25-02-6044	0277	53,34	2.100	63,50	2.500	66,04	2.600
46	25-02-6046	0278	55,88	2.200	66,04	2.600	68,58	2.700
48	25-02-6048	0279	58,42	2.300	68,58	2.700	71,12	2.800
50	25-02-6050	0280	60,96	2.400	71,12	2.800	73,66	2.900
52	25-02-6052	0281	63,50	2.500	73,66	2.900	76,20	3.000
54	25-02-6054	0282	66,04	2.600	76,20	3.000	78,74	3.100
56	25-02-6056	0283	68,58	2.700	78,74	3.100	81,28	3.200
58	25-02-6058	0284	71,12	2.800	81,28	3.200	83,82	3.300
60	25-02-6060	0285	73,66	2.900	83,82	3.300	86,36	3.400
62	25-02-6062	0286	76,20	3.000	86,36	3.400	88,90	3.500
64	25-02-6064	0287	78,74	3.100	88,90	3.500	91,44	3.600
66	25-02-6066	0288	81,28	3.200	91,44	3.600	93,98	3.700
68	25-02-6068	0289	83,82	3.300	93,98	3.700	96,52	3.800
70	25-02-6070	0290	86,36	3.400	96,52	3.800	99,06	3.900
72	25-02-6072	0291	88,90	3.500	99,06	3.900	101,60	4.000

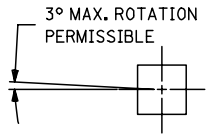

DETAIL "V"
SCALE = 20:1

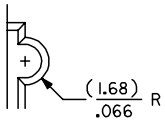

DETAIL "S"

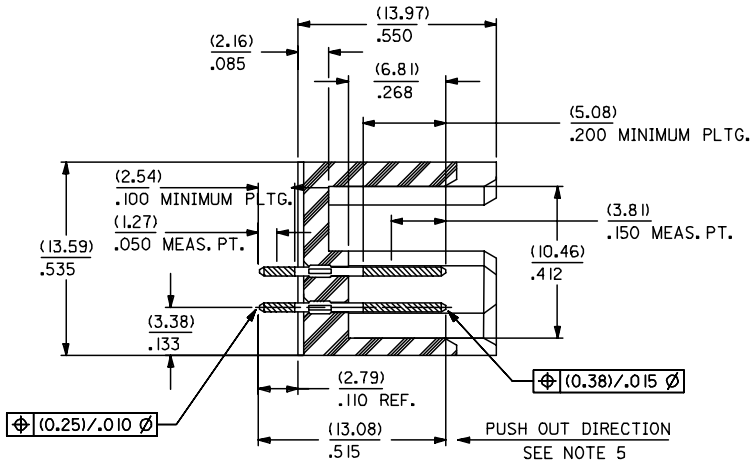

SECTION W-W

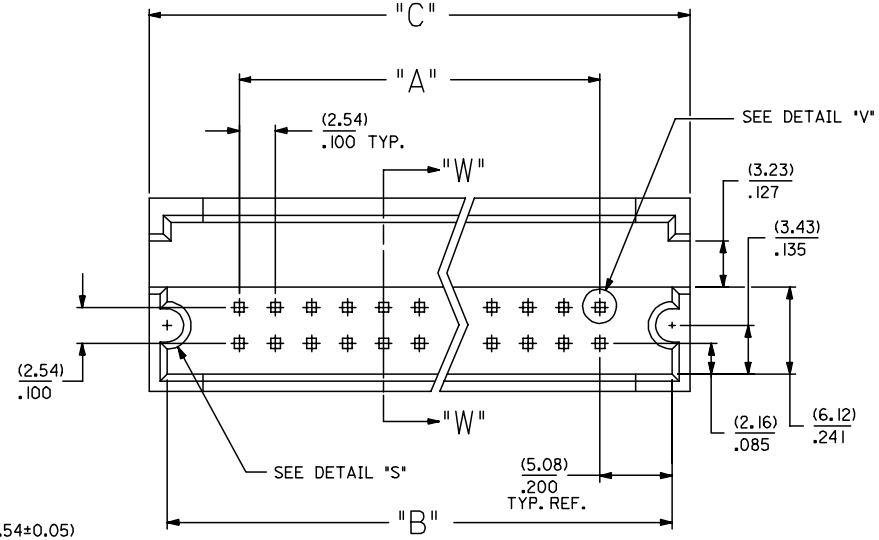

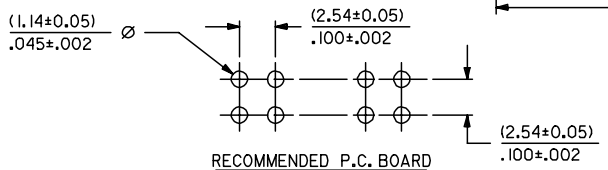

RECOMMENDED P.C. BOARD HOLE LAYOUT

NOTES:

1) WAFER MATERIAL: GLASS FILLED NYLON COLOR, BLACK.

2) PIN MATERIAL: PHOSPHOR BRONZE ALLOY

3) PIN PLATING:
TIP: .000015 MINIMUM GOLD IN SELECTED AREA
TAIL: .000075 MINIMUM TIN IN SELECTED AREA OVER .000050 NICKEL OVER-ALL.

*THE PRIMARY SHIPPING CARTON WILL BE LABELED "COMPLIANT TO RoHS DIRECTIVE 2002/95/EC AND ELV ANNEX II OF DIRECTIVE 2000/53/EC". CARTONS WITHOUT THIS LABEL MAY CONTAIN PRODUCT WITH LEAD.

4) PINS MUST MEET SOLDERABILITY SPEC. NO. 152.
5) PIN PUSH-OUT FORCE (1.81 KG.)/4 LBS MINIMUM
6) REFER TO P.S. NO. 70204.
7) STANDARD PACKAGING PER: PK-70873-0070.

REMOVE 0292-0320
EC NO: UCP2007-0113
DRWN:DMORGAN 2006/08/07
CH'KD:MS BARRA 2006/08/16
APPR:SMILLER 2006/08/18
DESCRIPTION
REV

QUALITY SYMBOLS
▼=0
▽=0

GENERAL TOLERANCES (UNLESS SPECIFIED)

	mm	INCH
4 PLACES	± ---	± ---
3 PLACES	± ---	± .010
2 PLACES	± 0.25	± ---
1 PLACE	± ---	± ---
ANGULAR ±1/2°		

DRAFT WHERE APPLICABLE MUST REMAIN WITHIN DIMENSIONS

DIMENSION STYLE: MM/IN
SCALE: 4:1
DESIGN UNITS: INCH
THIRD ANGLE PROJECTION

		DATE
DRAWN BY	JAS	1986/05/20
CHECKED BY	EIK	1986/05/20
APPROVED BY	WAZ	1986/05/20

TITLE: SHROUDED HEADER DUAL ROW W/PCB SLOTS & GUIDE EARS .100 GRID .025 SQ PIN

molex MOLEX INCORPORATED

MATERIAL NO.: SEE TABLE
DOCUMENT NO.: SDA-70204-0257-0320
SHEET NO.: 1 OF 1
SIZE: C

THIS DRAWING CONTAINS INFORMATION THAT IS PROPRIETARY TO MOLEX INCORPORATED AND SHOULD NOT BE USED WITHOUT WRITTEN PERMISSION