TAI-SAW TECHNOLOGY CO., LTD.
No. 3, Industrial 2nd Rd., Ping-Chen Industrial District,
Taoyuan, 324, Taiwan, R.O.C.
TEL: 886-3-4690038 FAX: 886-3-4697532
E-mail: tstsales@mail.taisaw.com Web: www.taisaw.com

Product Specifications Approval Sheet

Product Description: SAW Filter 2155 MHz 90MHz BW Band66 Rx SMD 1.1X0.9 mm

TST Part No.: TA2473C

Customer Part No.:_____

Customer signature required

Company:_____

Division:_____

Approved by :_____

Date:_____

Checked by:_____ Anne Chen _____ Anne Chen

Approved by:_____ Andy Yu _____ Andy Yu

Date:_____ 01 , 02, 2020 _____

1. Customer signed back is required before TST can proceed with sample build and receive orders.
2. Orders received without customer signed back will be regarded as agreement on the specifications.
3. Any specifications changes must be approved upon by both parties and a new revision of specifications shall be released to reflect the changes.

TAI-SAW TECHNOLOGY CO., LTD.

No. 3, Industrial 2nd Rd., Ping-Chen Industrial District,
Taoyuan, 324, Taiwan, R.O.C.
TEL: 886-3-4690038 FAX: 886-3-4697532
E-mail: tstsales@mail.taisaw.com Web: www.taisaw.com

SAW Filter 2155MHz 90 MHz BW SMD1.1x0.9mm

MODEL NO.:TA2473C REV. NO.:1

A. MAXIMUM RATING:

1. Input Power Level: 15dBm
2. DC Voltage : 5V
3. Operating Temperature: -40℃ to +85℃
4. Storage Temperature: -40℃ to +85℃
5. Moisture Sensitivity Level: Level 1
6. ESD 50V(MM) 100V(HBM)

RoHS Compliant

Lead-free soldering

Electrostatic **S**ensitive **D**evice (**ESD**)

B. ELECTRICAL CHARACTERISTICS:

Terminating source impedance(**Unbalanced**) : Zs = 50//4.7nH Ω

Terminating load impedance(**Unbalanced**) : Z_L = 50//3.9nH Ω

Item		Unit	Min.	Typ.	Max.	Note
Center Frequency	**Fc**	MHz	-	2155		-
Insertion Loss (2110~2200 MHz)	**IL**	dB(*1)	-	1.7	2.8	-
Amplitude ripple (2110~2200 MHz)		dB	-	0.7	1.7	
VSWR Input(2110~2200 MHz)			-	1.5	2.2	-
VSWR Output (2110~2200 MHz)			-	1.5	2.2	
Attenuation (reference level from 0 dB)						
1710 ~ 1780 MHz		dB	42	49	-	-
1920 ~ 2010 MHz		dB	38	45		
2400 ~ 2500 MHz		dB	30	36	-	-
3820 ~ 3980 MHz		dB	30	36	-	-
4900 ~ 5950 MHz		dB	25	32		
5530 ~ 5760 MHz		dB	25	32		

Notes : (*1) Specification of insertion loss excludes loss that comes from the test board.

C.OUTLINE DRAWING:

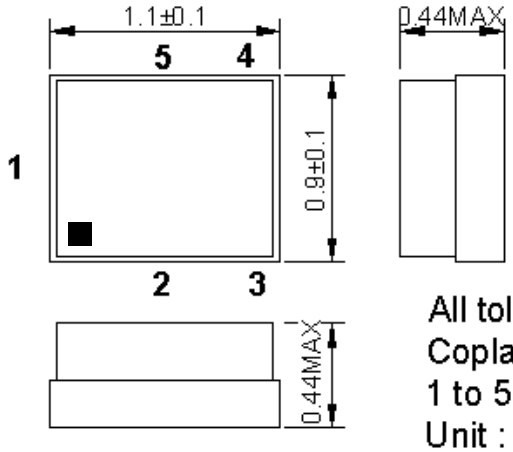

All tolerances are +/-0.05 mm unless otherwise specified
Coplanarity : 0.1 mm max.
1 to 5 : Pin No.
Unit : mm

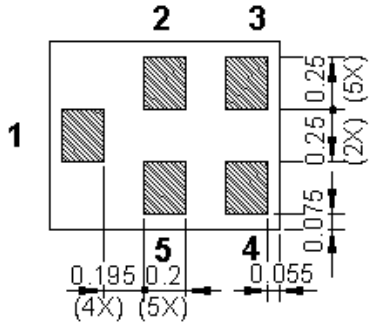

Pin assignment

Pin No.	Pin name	Description
1	In	Input
2	GND	Ground
3	GND	Ground
4	Out	Output
5	GND	Ground

Top View (Mass Production):

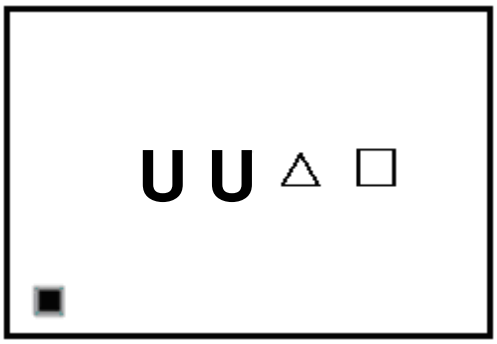

△ : **Date Code**
□ : **Lot No. (Indicated by 0~9 or A to Z and a to z, except I, O, i, o and l)**

Date Code: .Follow the table. (4-year cycle)

Year	Jan.	Feb.	Mar.	Apr.	May	Jun.	Jul.	Aug.	Sep.	Oct.	Nov.	Dec.
2018	N	P	Q	R	S	T	U	V	W	X	Y	Z
2019	a	b	c	d	e	f	g	h	j	k	l	m
2020	n	p	q	r	s	t	u	v	w	x	y	z
2021	A	B	C	D	E	F	G	H	J	K	L	M

D.Evaluation Circuit

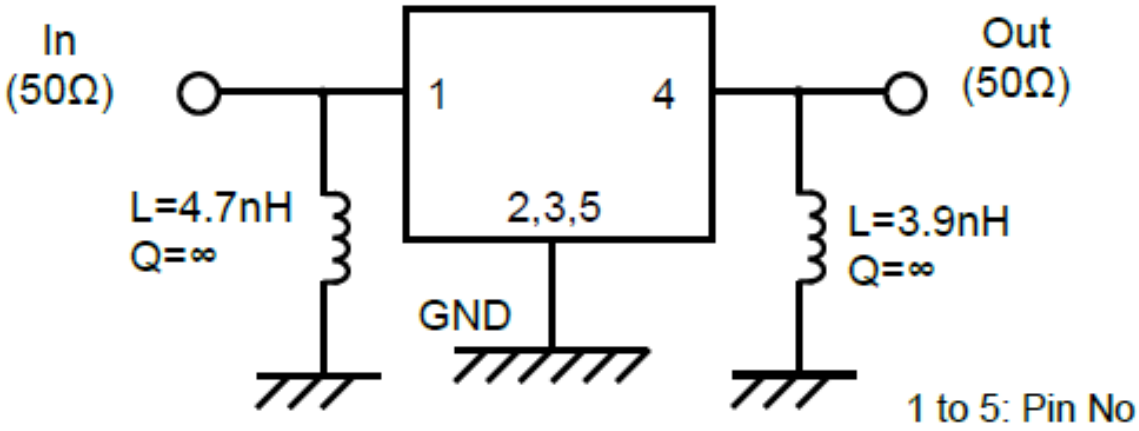

E. PCB Footprint：

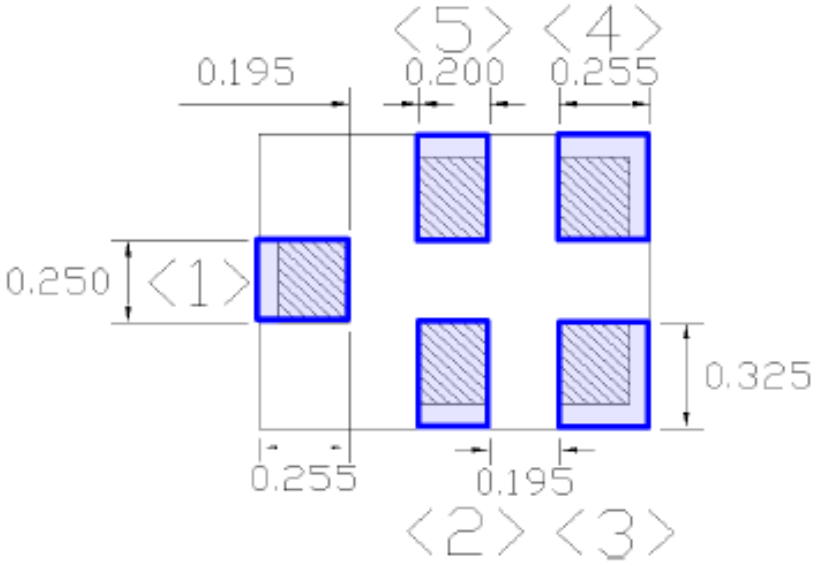

F. FREQUENCY CHARACTERISTICS:

Pass-band

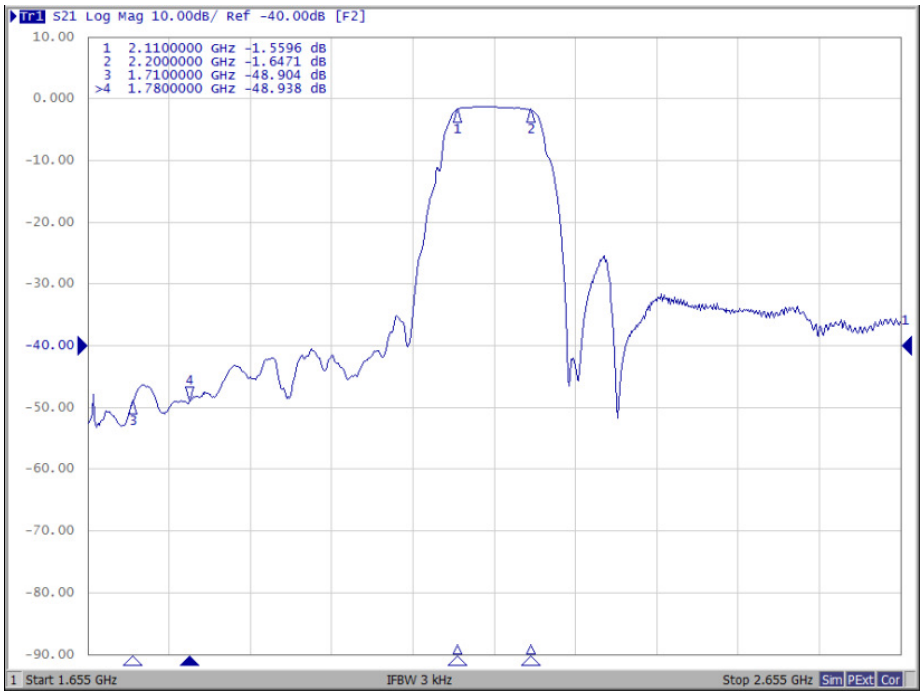

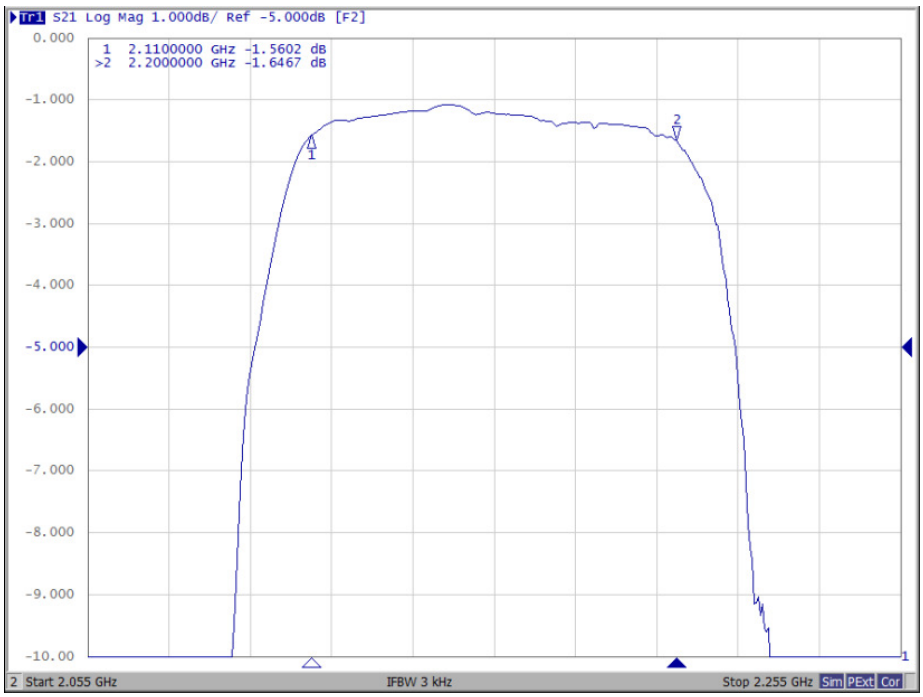

Input Port

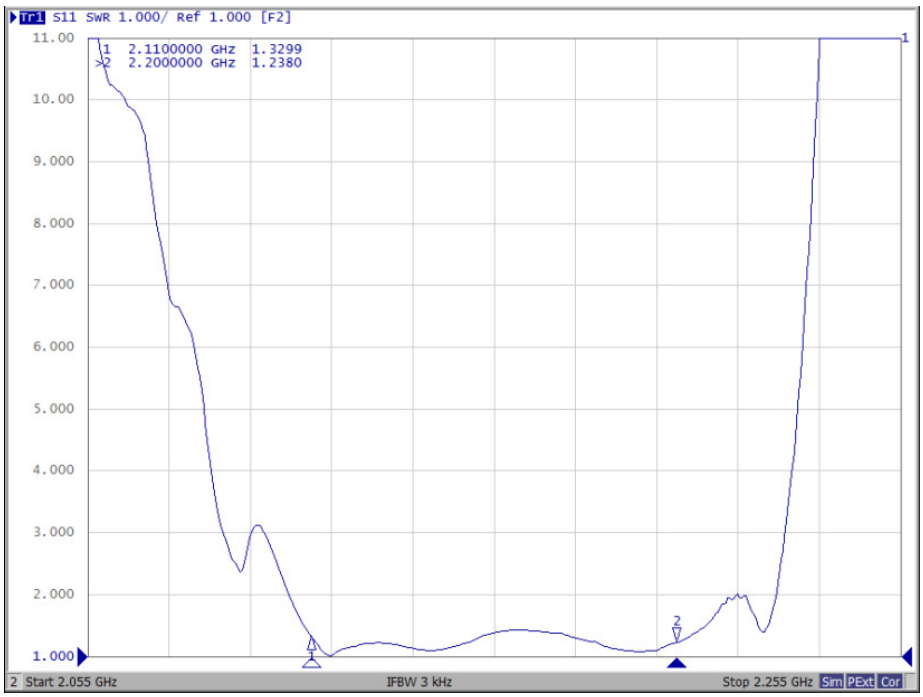
Tr1 S11 SWR 1.000/ Ref 1.000 [F2]
1 2.1100000 GHz 1.3299
>2 2.2000000 GHz 1.2380
11.00
10.00
9.000
8.000
7.000
6.000
5.000
4.000
3.000
2.000
1.000
2 Start 2.055 GHz
IFBW 3 kHz
Stop 2.255 GHz

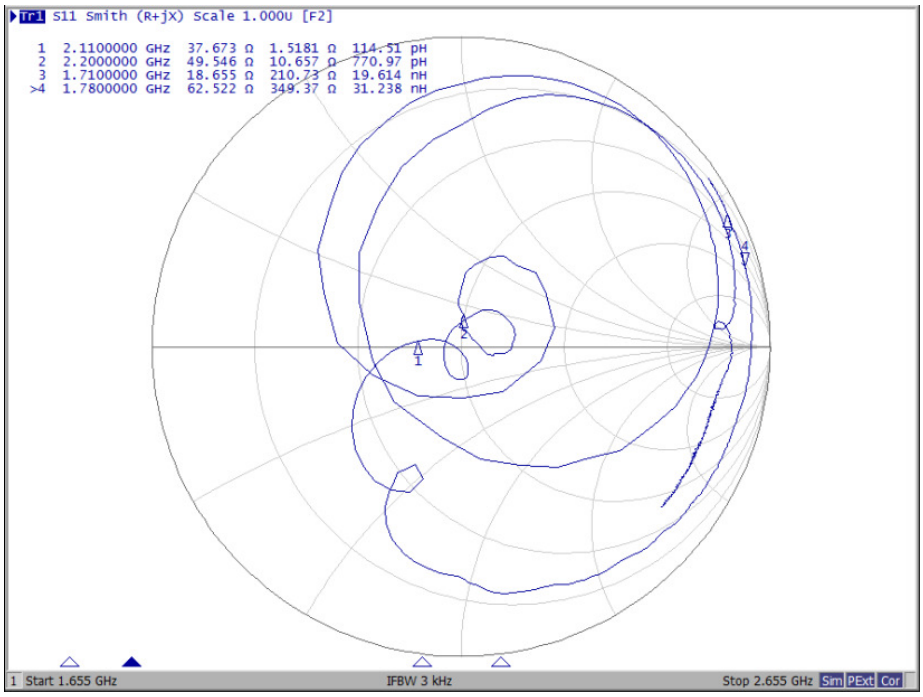
Tr1 S11 Smith (R+jX) Scale 1.000U [F2]
1 2.1100000 GHz 37.673 Ω 1.5181 Ω 114.51 pH
2 2.2000000 GHz 49.546 Ω 10.657 Ω 770.97 pH
3 1.7100000 GHz 18.655 Ω 210.73 Ω 19.614 nH
>4 1.7800000 GHz 62.522 Ω 349.37 Ω 31.238 nH
1 Start 1.655 GHz
IFBW 3 kHz
Stop 2.655 GHz

Output Port

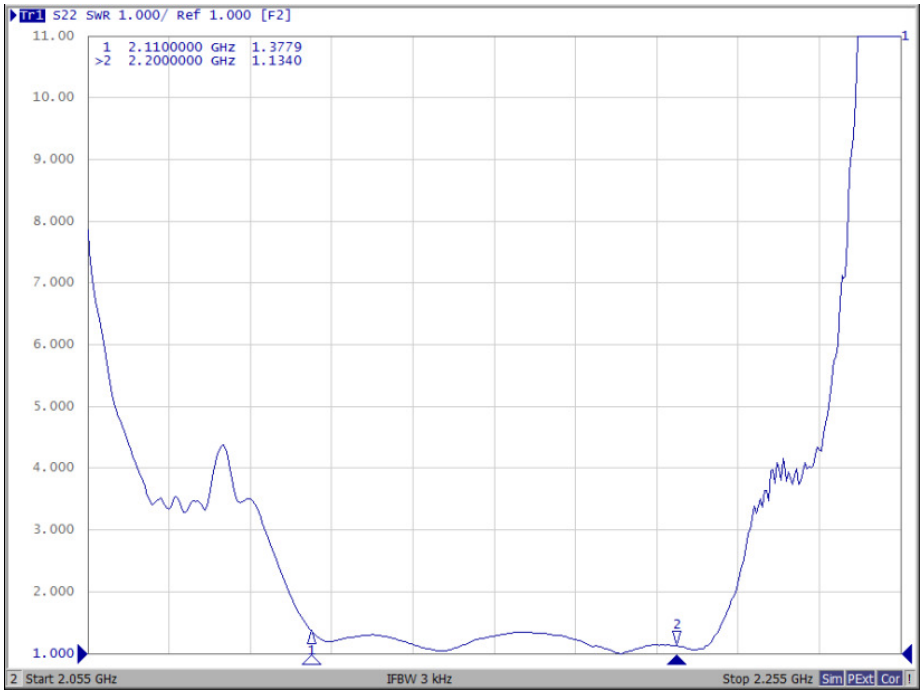
Tr1 S22 SWR 1.000/ Ref 1.000 [F2]
1 2.1100000 GHz 1.3779
>2 2.2000000 GHz 1.1340
11.00
10.00
9.000
8.000
7.000
6.000
5.000
4.000
3.000
2.000
1.000
2 Start 2.055 GHz
IFBW 3 kHz
Stop 2.255 GHz

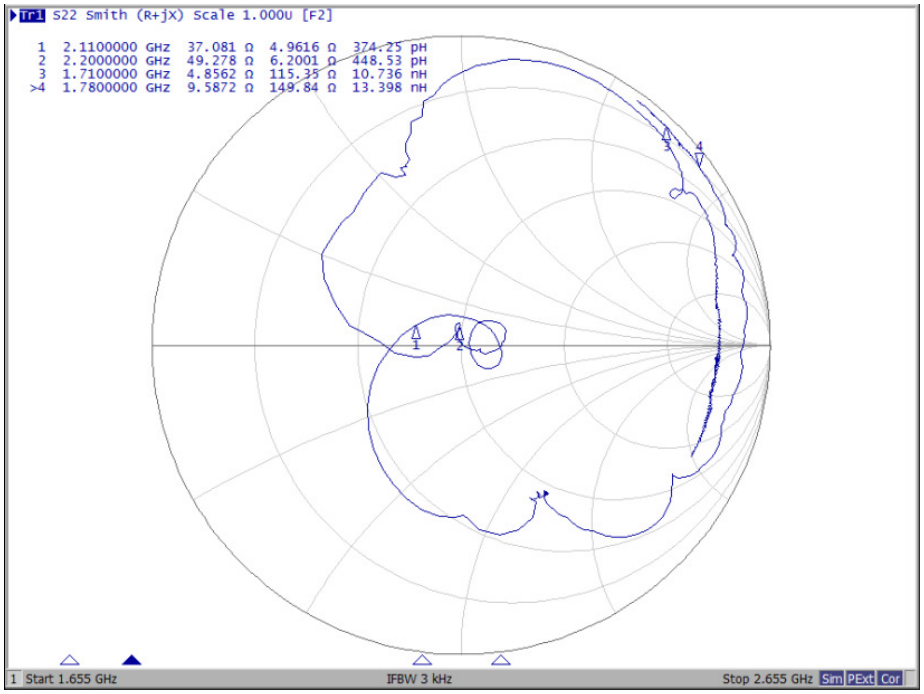
Tr1 S22 Smith (R+jX) Scale 1.000U [F2]
1 2.1100000 GHz 37.081 Ω 4.9616 Ω 374.25 pH
2 2.2000000 GHz 49.278 Ω 6.2001 Ω 448.53 pH
3 1.7100000 GHz 4.8562 Ω 115.35 Ω 10.736 nH
>4 1.7800000 GHz 9.5872 Ω 149.84 Ω 13.398 nH
1 Start 1.655 GHz
IFBW 3 kHz
Stop 2.655 GHz

Wide-band

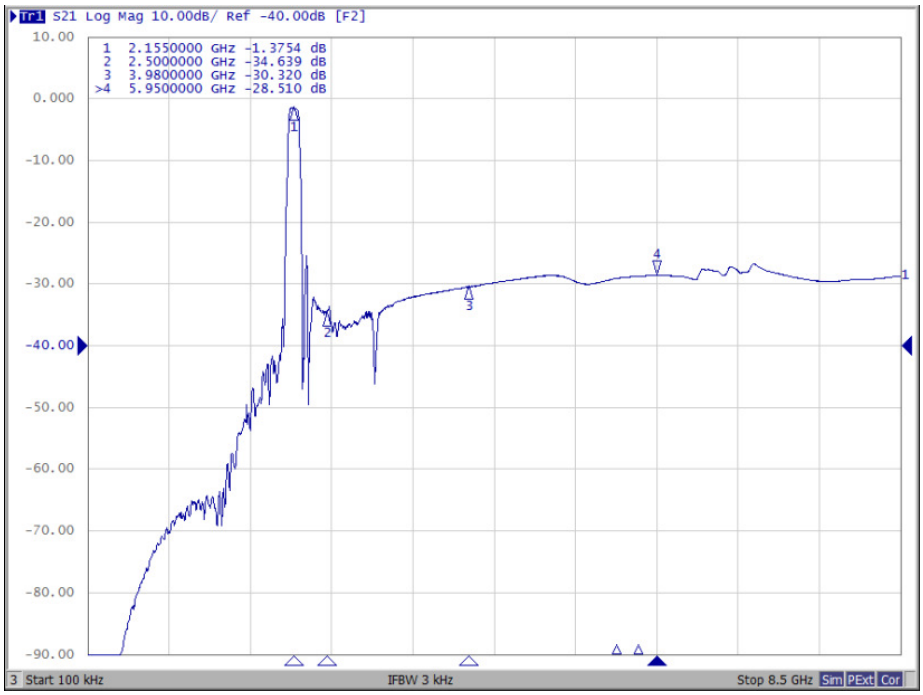
Tr1 S21 Log Mag 10.00dB/ Ref -40.00dB [F2]
1 2.1550000 GHz -1.3754 dB
2 2.5000000 GHz -34.639 dB
3 3.9800000 GHz -30.320 dB
>4 5.9500000 GHz -28.510 dB
10.00
0.000
-10.00
-20.00
-30.00
-40.00
-50.00
-60.00
-70.00
-80.00
-90.00
3 Start 100 kHz
IFBW 3 kHz
Stop 8.5 GHz
Sim PExt Cor

G. PACKING:

1. REEL DIMENSION

(Please refer to FR-75D10 for packing quantity)

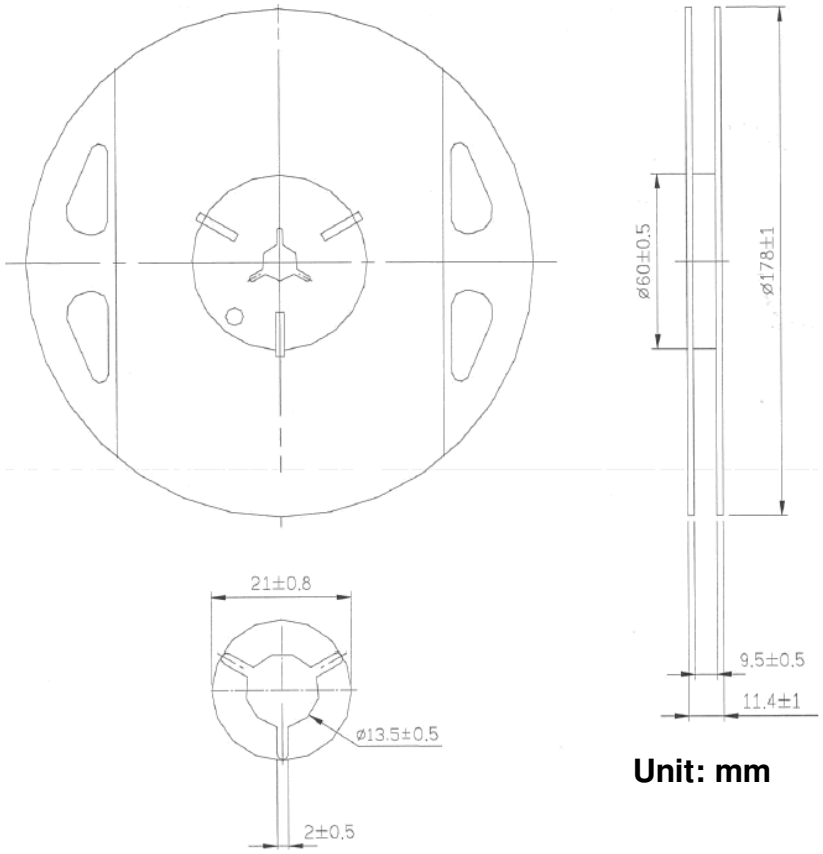

Unit: mm

2.TAPE DIMENSION

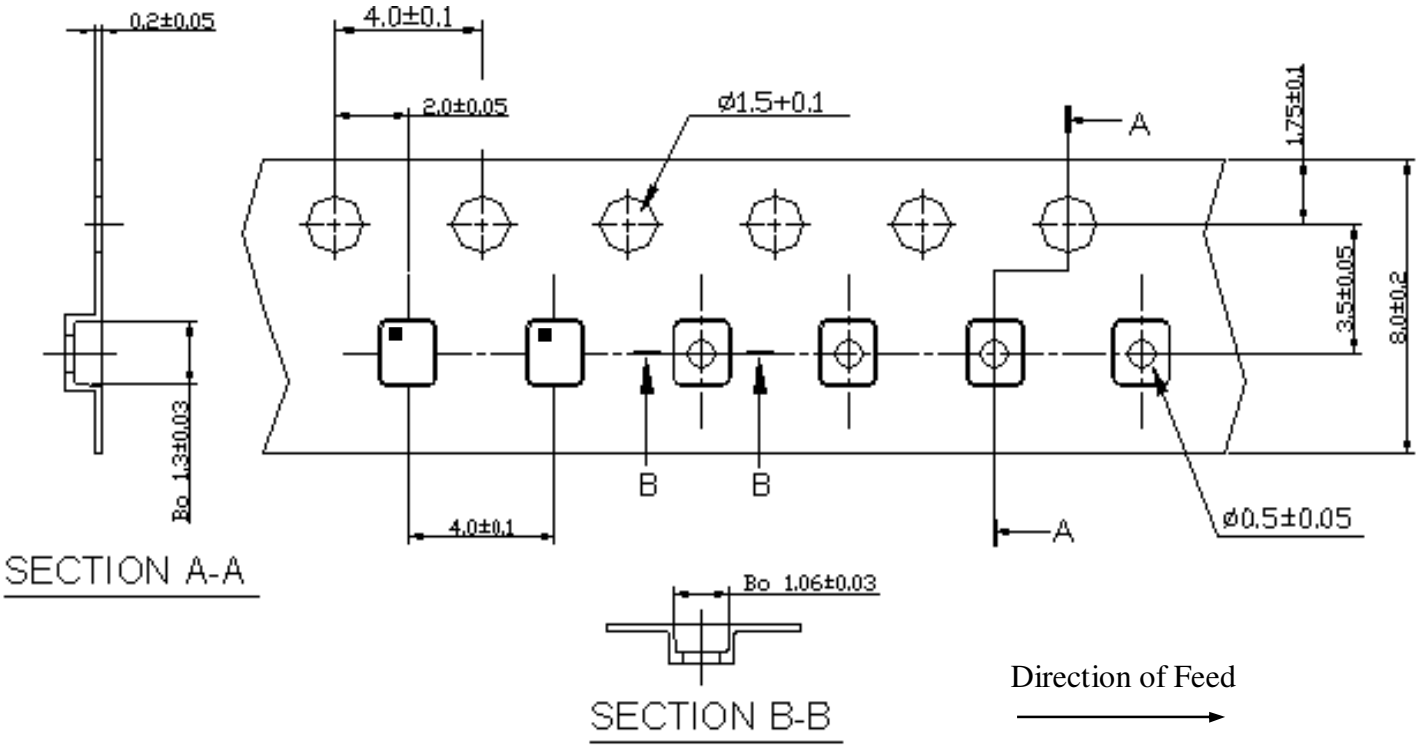

H. RECOMMENDED REFLOW PROFILE :
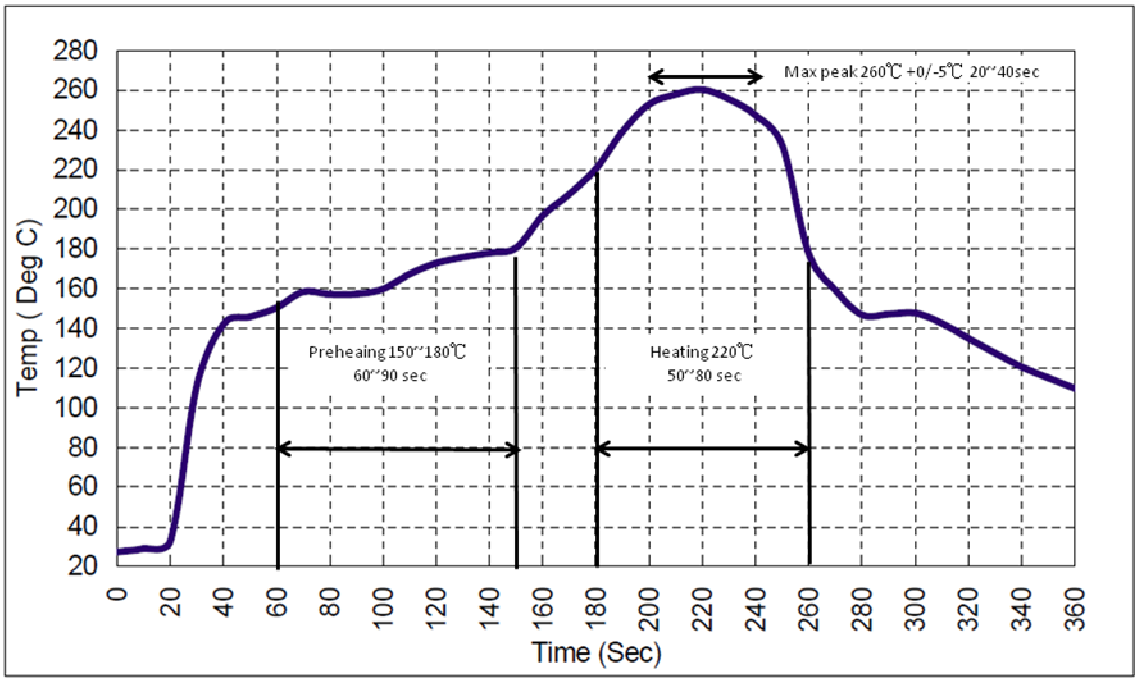
1. Preheating shall be fixed at 150~180℃ for 60~90 seconds.
2. Ascending time to preheating temperature 150℃ shall be 30 seconds min.
3. Heating shall be fixed at 220℃ for 50~80 seconds and at 245~260℃ peak (min. 10sec).
4. Time : 2 times.