SCLS161D − DECEMBER 1982 − REVISED SEPTEMBER 2003

- **Wide Operating Voltage Range of 2 V to 6 V**
- **Outputs Can Drive Up To 10 LSTTL Loads**
- **Low Power Consumption, 80-μA Max I_{CC}**
- **Typical t_{pd} = 14 ns**
- **±4-mA Output Drive at 5 V**
- **Low Input Current of 1 μA Max**
- **Allow Design of Either RC- or Crystal-Oscillator Circuits**

SN54HC4060 . . . J OR W PACKAGE
SN74HC4060 . . . D, DB, N, NS, OR PW PACKAGE
(TOP VIEW)

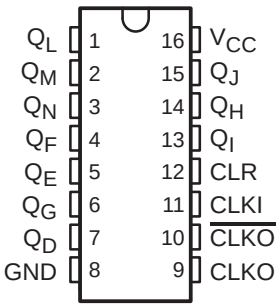

SN54HC4060 . . . FK PACKAGE
(TOP VIEW)

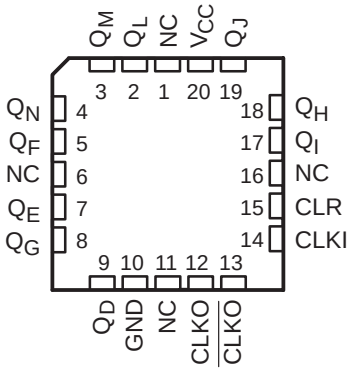

NC − No internal connection

description/ordering information

The ’HC4060 devices consist of an oscillator section and 14 ripple-carry binary counter stages. The oscillator configuration allows design of either RC- or crystal-oscillator circuits. A high-to-low transition on the clock (CLKI) input increments the counter. A high level at the clear (CLR) input disables the oscillator ($\overline{\text{CLKO}}$ goes high and CLKO goes low) and resets the counter to zero (all Q outputs low).

ORDERING INFORMATION

T_A	PACKAGE†		ORDERABLE PART NUMBER	TOP-SIDE MARKING
−40°C to 85°C	PDIP − N	Tube of 25	SN74HC4060N	SN74HC4060N
	SOIC − D	Tube of 40	SN74HC4060D	HC4060
		Reel of 2500	SN74HC4060DR	
		Reel of 250	SN74HC4060DT	
	SOP − NS	Reel of 2000	SN74HC4060NSR	HC4060
	SSOP − DB	Reel of 2000	SN74HC4060DBR	HC4060
	TSSOP − PW	Tube of 90	SN74HC4060PW	HC4060
		Reel of 2000	SN74HC4060PWR	
		Reel of 250	SN74HC4060PWT	
−55°C to 125°C	CDIP − J	Tube of 25	SNJ54HC4060J	SNJ54HC4060J
	CFP − W	Tube of 150	SNJ54HC4060W	SNJ54HC4060W
	LCCC − FK	Tube of 55	SNJ54HC4060FK	SNJ54HC4060FK

† Package drawings, standard packing quantities, thermal data, symbolization, and PCB design guidelines are available at www.ti.com/sc/package.

Please be aware that an important notice concerning availability, standard warranty, and use in critical applications of Texas Instruments semiconductor products and disclaimers thereto appears at the end of this data sheet.

PRODUCTION DATA information is current as of publication date. Products conform to specifications per the terms of Texas Instruments standard warranty. Production processing does not necessarily include testing of all parameters.

Copyright © 2003, Texas Instruments Incorporated

On products compliant to MIL-PRF-38535, all parameters are tested unless otherwise noted. On all other products, production processing does not necessarily include testing of all parameters.

FUNCTION TABLE
(each buffer)

INPUTS		FUNCTION
CLK	CLR	
↑	L	No change
↓	L	Advance to next stage
X	H	All outputs L

logic diagram (positive logic)

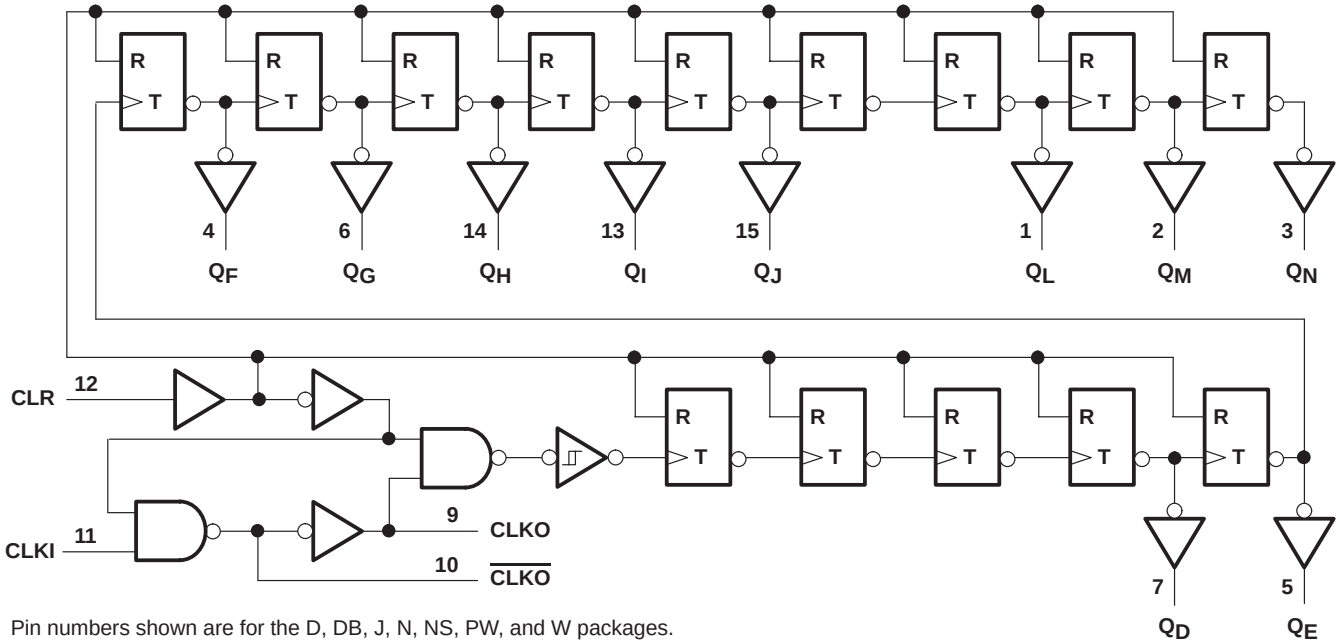

Pin numbers shown are for the D, DB, J, N, NS, PW, and W packages.

absolute maximum ratings over operating free-air temperature range (unless otherwise noted)†

Supply voltage range, V_{CC} . . . . . −0.5 V to 7 V
Input clamp current, I_{IK} ($V_I < 0$ or $V_I > V_{CC}$) (see Note 1) . . . . . ±20 mA
Output clamp current, I_{OK} ($V_O < 0$ or $V_O > V_{CC}$) (see Note 1) . . . . . ±20 mA
Continuous output current, I_O ($V_O = 0$ to V_{CC}) . . . . . ±25 mA
Package thermal impedance, θ_{JA} (see Note 2): D package . . . . . 73°C/W
DB package . . . . . 82°C/W
N package . . . . . 67°C/W
NS package . . . . . 64°C/W
PW package . . . . . 108°C/W
Storage temperature range, T_{stg} . . . . . −65°C to 150°C

† Stresses beyond those listed under “absolute maximum ratings” may cause permanent damage to the device. These are stress ratings only, and functional operation of the device at these or any other conditions beyond those indicated under “recommended operating conditions” is not implied. Exposure to absolute-maximum-rated conditions for extended periods may affect device reliability.

NOTES: 1. The input and output voltage ratings may be exceeded if the input and output current ratings are observed.
2. The package thermal impedance is calculated in accordance with JESD 51-7.

recommended operating conditions (see Note 3)

			SN54HC4060			SN74HC4060			UNIT
			MIN	NOM	MAX	MIN	NOM	MAX	
V_{CC}	Supply voltage		2	5	6	2	5	6	V
V_{IH}	High-level input voltage	V_{CC} = 2 V	1.5			1.5			V
		V_{CC} = 4.5 V	3.15			3.15			
		V_{CC} = 6 V	4.2			4.2			
V_{IL}	Low-level input voltage	V_{CC} = 2 V			0.5			0.5	V
		V_{CC} = 4.5 V			1.35			1.35	
		V_{CC} = 6 V			1.8			1.8	
V_I	Input voltage		0		V_{CC}	0		V_{CC}	V
V_O	Output voltage		0		V_{CC}	0		V_{CC}	V
$\Delta t/\Delta v$	Input transition rise/fall time	V_{CC} = 2 V			1000			1000	ns
		V_{CC} = 4.5 V			500			500	
		V_{CC} = 6 V			400			400	
T_A	Operating free-air temperature		−55		125	−40		85	°C

NOTE 3: All unused inputs of the device must be held at V_{CC} or GND to ensure proper device operation. Refer to the TI application report, *Implications of Slow or Floating CMOS Inputs*, literature number SCBA004.

electrical characteristics over recommended operating free-air temperature range (unless otherwise noted)

PARAMETER		TEST CONDITIONS		V_{CC}	T_A = 25°C			SN54HC4060		SN74HC4060		UNIT
					MIN	TYP	MAX	MIN	MAX	MIN	MAX	
V_{OH}	All outputs	$V_I = V_{IH}$ or V_{IL},	I_{OH} = −20 µA	2 V	1.9	1.998		1.9		1.9		V
				4.5 V	4.4	4.499		4.4		4.4		
				6 V	5.9	5.999		5.9		5.9		
	Q outputs	$V_I = V_{IH}$ or V_{IL}	I_{OH} = −4 mA	4.5 V	3.98	4.3		3.7		3.84		
			I_{OH} = −5.2 mA	6 V	5.48	5.8		5.2		5.34		
V_{OL}	All outputs	$V_I = V_{IH}$ or V_{IL},	I_{OL} = 20 µA	2 V		0.002	0.1		0.1		0.1	V
				4.5 V		0.001	0.1		0.1		0.1	
				6 V		0.001	0.1		0.1		0.1	
	Q outputs	$V_I = V_{IH}$ or V_{IL}	I_{OL} = 4 mA	4.5 V		0.17	0.26		0.4		0.33	
			I_{OL} = 5.2 mA	6 V		0.15	0.26		0.4		0.33	
I_I		$V_I = V_{CC}$ or 0		6 V		±0.1	±100		±1000		±1000	nA
I_{CC}		$V_I = V_{CC}$ or 0,	I_O = 0	6 V			8		160		80	µA
C_i				2 V to 6 V		3	10		10		10	pF

timing requirements over recommended operating free-air temperature range (unless otherwise noted)

			V_{CC}	T_A = 25°C		SN54HC4060		SN74HC4060		UNIT
				MIN	MAX	MIN	MAX	MIN	MAX	
f_{clock}	Clock frequency		2 V		5.5		3.7		4.3	MHz
			4.5 V		28		19		22	
			6 V		33		22		25	
t_w	Pulse duration	CLKI high or low	2 V	90		135		115		ns
			4.5 V	18		27		23		
			6 V	15		23		20		
		CLR high	2 V	90		135		115		
			4.5 V	18		27		23		
			6 V	15		23		20		
t_{su}	Setup time, CLR inactive before CLKI↓		2 V	160		240		200		ns
			4.5 V	32		48		40		
			6 V	27		41		34		

switching characteristics over recommended operating free-air temperature range, C_L = 50 pF (unless otherwise noted) (see Figure 1)

PARAMETER	FROM (INPUT)	TO (OUTPUT)	V_{CC}	T_A = 25°C			SN54HC4060		SN74HC4060		UNIT
				MIN	TYP	MAX	MIN	MAX	MIN	MAX	
f_{max}			2 V	5.5	10		3.7		4.3		MHz
			4.5 V	28	45		19		22		
			6 V	33	53		22		25		
t_{pd}	CLKI	Q_D	2 V		240	490		735		615	ns
			4.5 V		58	98		147		123	
			6 V		42	83		125		105	
t_{PHL}	CLR	Any Q	2 V		66	140		210		175	ns
			4.5 V		18	28		42		35	
			6 V		14	24		36		30	
t_t		Any	2 V		28	75		110		95	ns
			4.5 V		8	15		22		19	
			6 V		6	30		19		16	

operating characteristics, T_A = 25°C

PARAMETER		TEST CONDITIONS	TYP	UNIT
C_{pd}	Power dissipation capacitance	No load	88	pF

PARAMETER MEASUREMENT INFORMATION

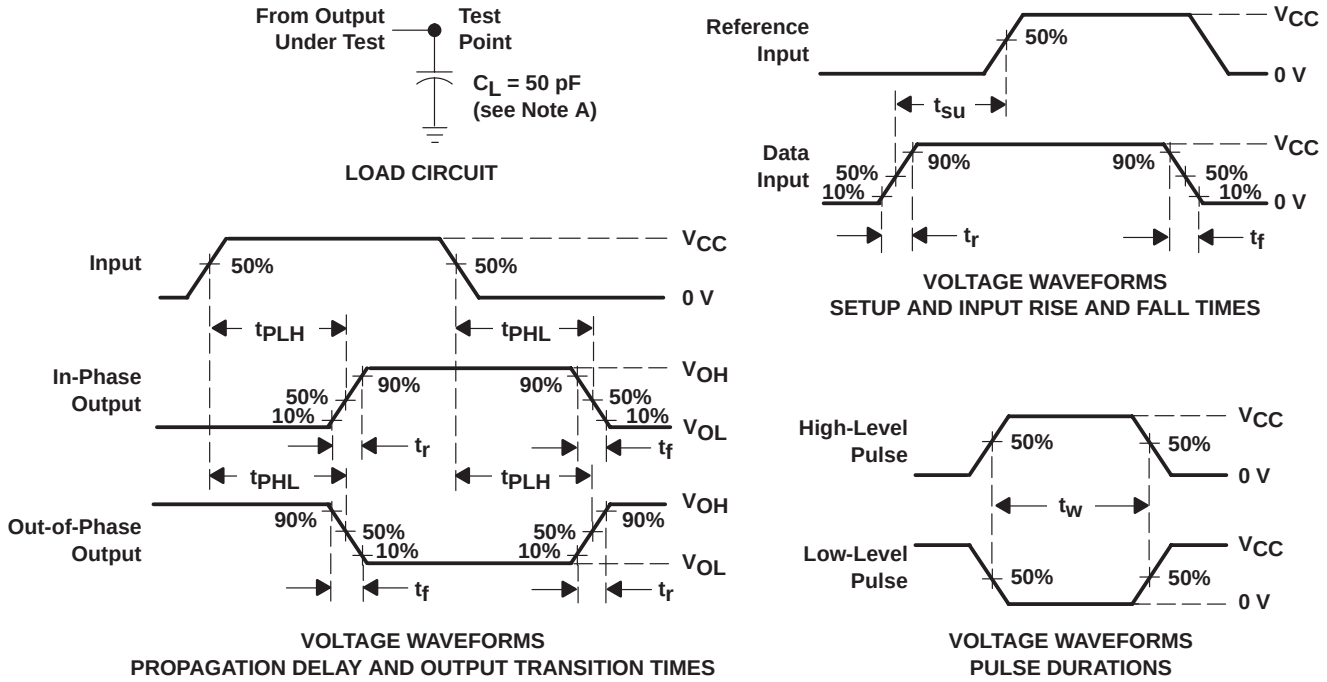

NOTES: A. C_L includes probe and test-fixture capacitance.
B. Phase relationships between waveforms were chosen arbitrarily. All input pulses are supplied by generators having the following characteristics: PRR ≤ 1 MHz, Z_O = 50 Ω, t_r = 6 ns, t_f = 6 ns.
C. For clock inputs, f_{max} is measured when the input duty cycle is 50%.
D. The outputs are measured one at a time with one input transition per measurement.
E. t_{PLH} and t_{PHL} are the same as t_{pd}.

Figure 1. Load Circuit and Voltage Waveforms

CONNECTING AN RC-OSCILLATOR CIRCUIT TO THE ’HC4060 DEVICES

The ’HC4060 devices consist of an oscillator section and 14 ripple-carry binary counter stages. The oscillator configuration allows design of either RC- or crystal-oscillator circuits.

When an RC-oscillator circuit is implemented, two resistors and a capacitor are required. The components are attached to the terminals as shown:

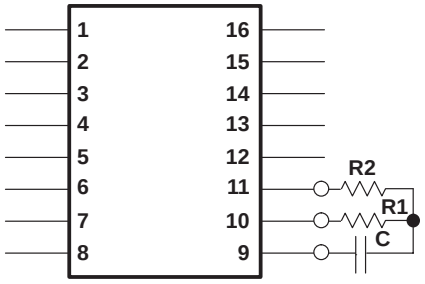

To determine the values of capacitance and resistance necessary to obtain a specific oscillator frequency (f), use this formula:

$$f = \frac{1}{2(R1)(C)\left(\frac{0.405\,R2}{R1+R2} + 0.693\right)}$$

If R2 > > R1 (i.e., R2 = 10R1), the above formula simplifies to:

$$f = \frac{0.455}{RC}$$

FK (S-CQCC-N**)

LEADLESS CERAMIC CHIP CARRIER

28 TERMINAL SHOWN

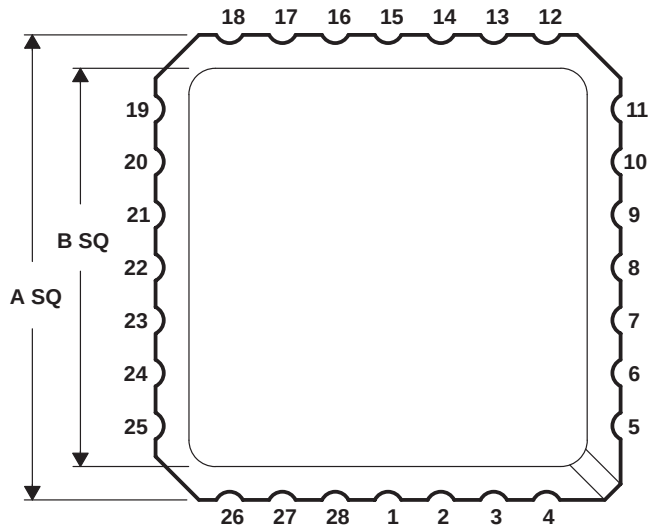

NO. OF TERMINALS **	A		B	
	MIN	MAX	MIN	MAX
20	0.342 (8,69)	0.358 (9,09)	0.307 (7,80)	0.358 (9,09)
28	0.442 (11,23)	0.458 (11,63)	0.406 (10,31)	0.458 (11,63)
44	0.640 (16,26)	0.660 (16,76)	0.495 (12,58)	0.560 (14,22)
52	0.739 (18,78)	0.761 (19,32)	0.495 (12,58)	0.560 (14,22)
68	0.938 (23,83)	0.962 (24,43)	0.850 (21,6)	0.858 (21,8)
84	1.141 (28,99)	1.165 (29,59)	1.047 (26,6)	1.063 (27,0)

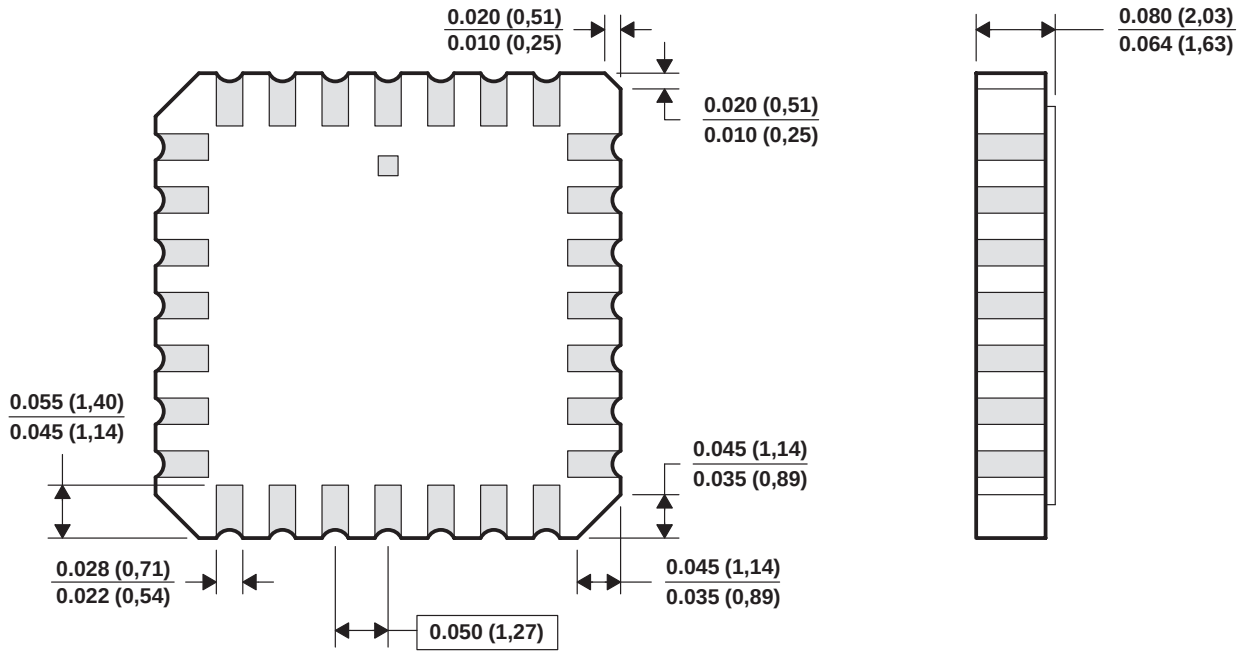

4040140/D 10/96

NOTES:
A. All linear dimensions are in inches (millimeters).
B. This drawing is subject to change without notice.
C. This package can be hermetically sealed with a metal lid.
D. The terminals are gold plated.
E. Falls within JEDEC MS-004

N (R–PDIP–T**) PLASTIC DUAL–IN–LINE PACKAGE

16 PINS SHOWN

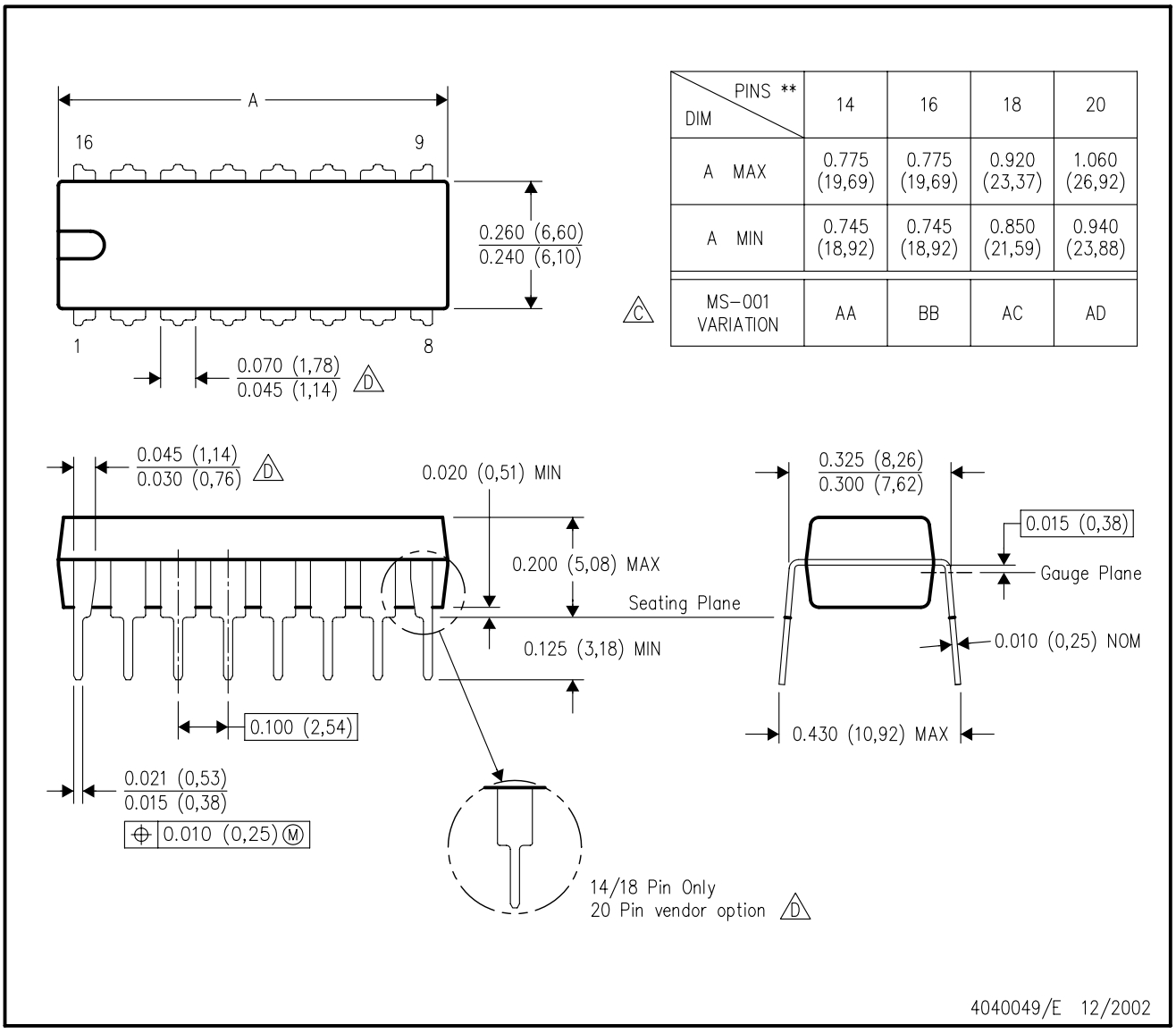

DIM \ PINS **	14	16	18	20
A MAX	0.775 (19,69)	0.775 (19,69)	0.920 (23,37)	1.060 (26,92)
A MIN	0.745 (18,92)	0.745 (18,92)	0.850 (21,59)	0.940 (23,88)
MS–001 VARIATION (C)	AA	BB	AC	AD

NOTES:
A. All linear dimensions are in inches (millimeters).
B. This drawing is subject to change without notice.
C. Falls within JEDEC MS–001, except 18 and 20 pin minimum body length (Dim A).
D. The 20 pin end lead shoulder width is a vendor option, either half or full width.

D (R–PDSO–G16) PLASTIC SMALL–OUTLINE PACKAGE

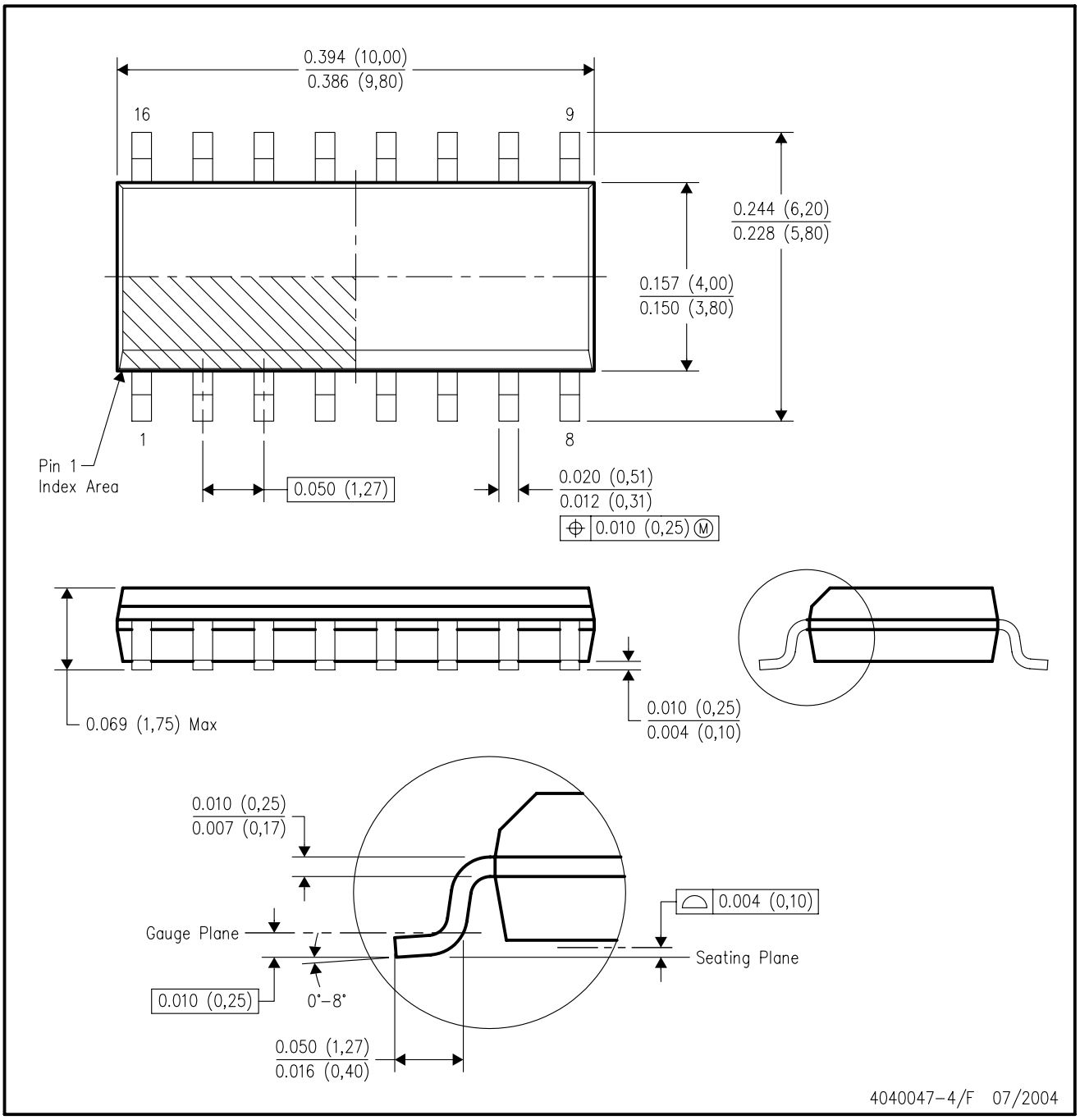

NOTES:
A. All linear dimensions are in inches (millimeters).
B. This drawing is subject to change without notice.
C. Body dimensions do not include mold flash or protrusion not to exceed 0.006 (0,15).
D. Falls within JEDEC MS–012 variation AC.

MECHANICAL DATA

NS (R-PDSO-G)** **PLASTIC SMALL-OUTLINE PACKAGE**

14-PINS SHOWN

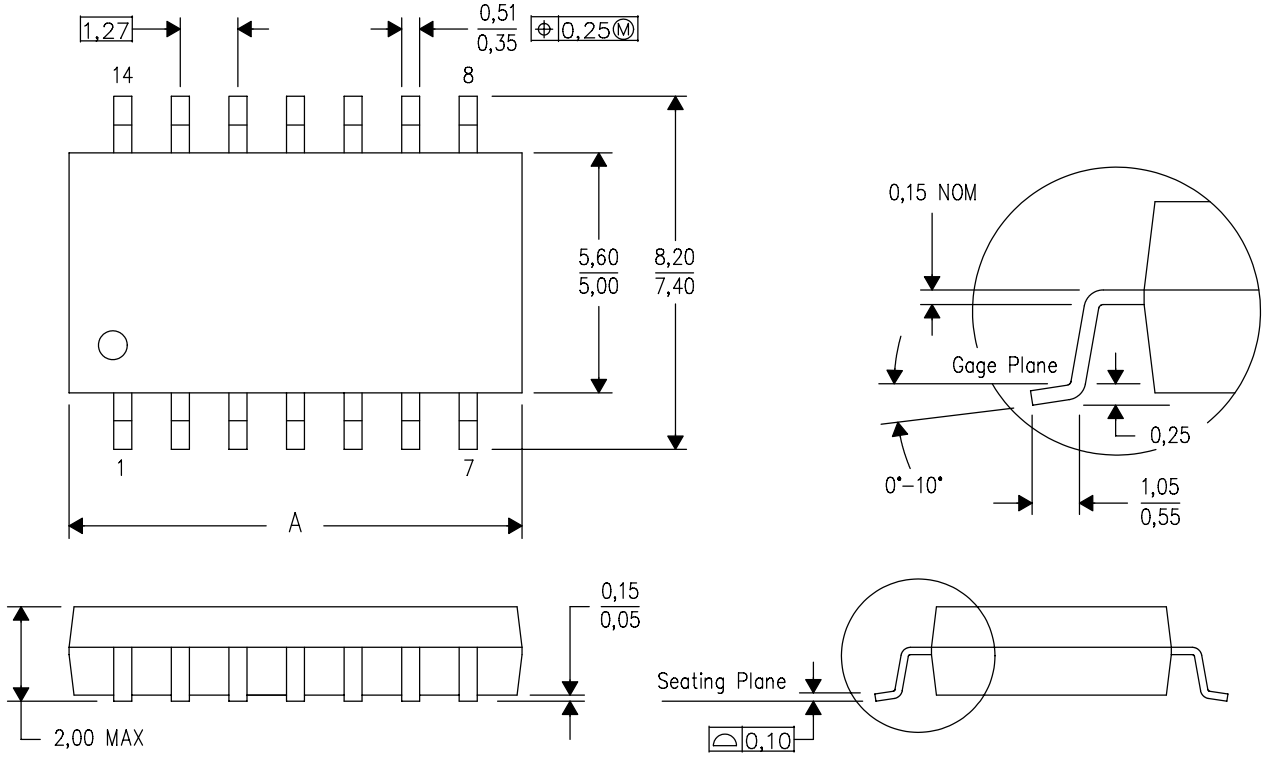

DIM \ PINS **	14	16	20	24
A MAX	10,50	10,50	12,90	15,30
A MIN	9,90	9,90	12,30	14,70

4040062/C 03/03

NOTES:
A. All linear dimensions are in millimeters.
B. This drawing is subject to change without notice.
C. Body dimensions do not include mold flash or protrusion, not to exceed 0,15.

DB (R-PDSO-G)** **PLASTIC SMALL-OUTLINE**

28 PINS SHOWN

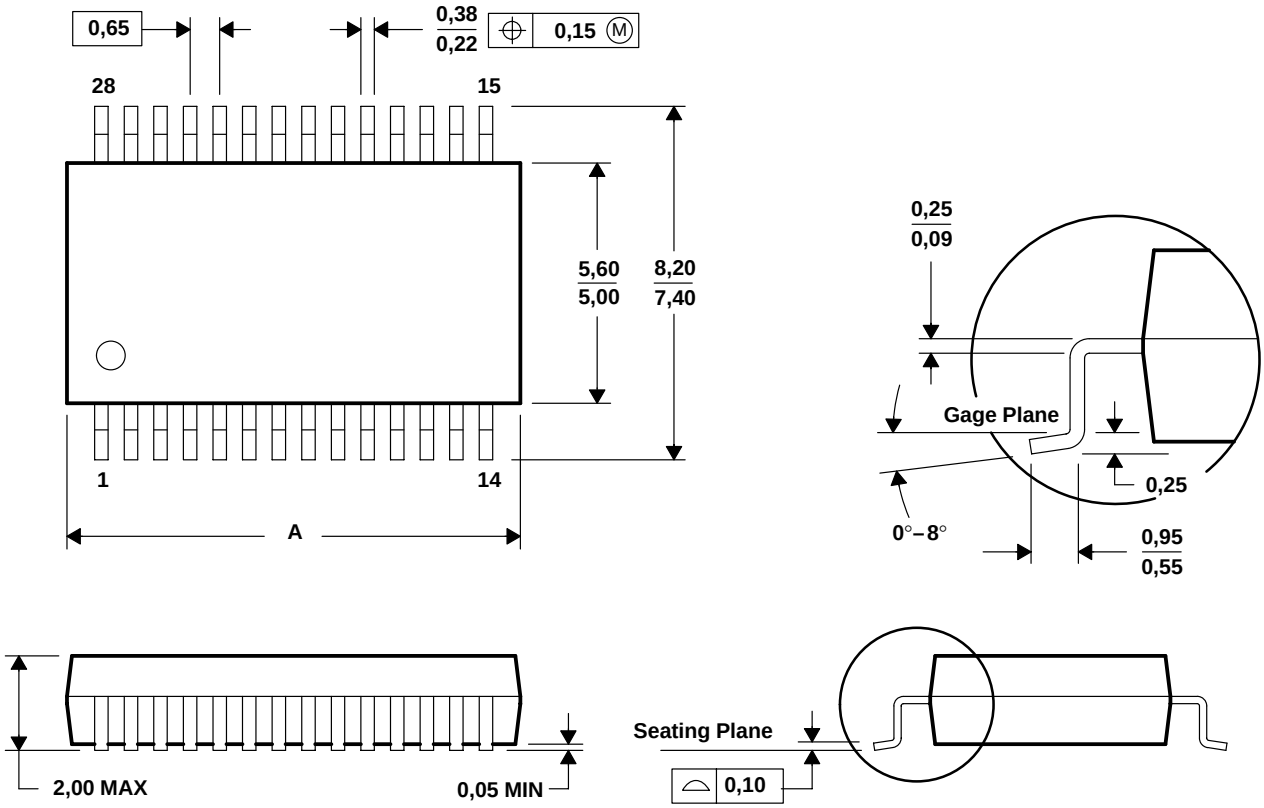

DIM \ PINS **	14	16	20	24	28	30	38
A MAX	6,50	6,50	7,50	8,50	10,50	10,50	12,90
A MIN	5,90	5,90	6,90	7,90	9,90	9,90	12,30

4040065 /E 12/01

NOTES: A. All linear dimensions are in millimeters.
B. This drawing is subject to change without notice.
C. Body dimensions do not include mold flash or protrusion not to exceed 0,15.
D. Falls within JEDEC MO-150

PW (R-PDSO-G)** **PLASTIC SMALL-OUTLINE PACKAGE**

14 PINS SHOWN

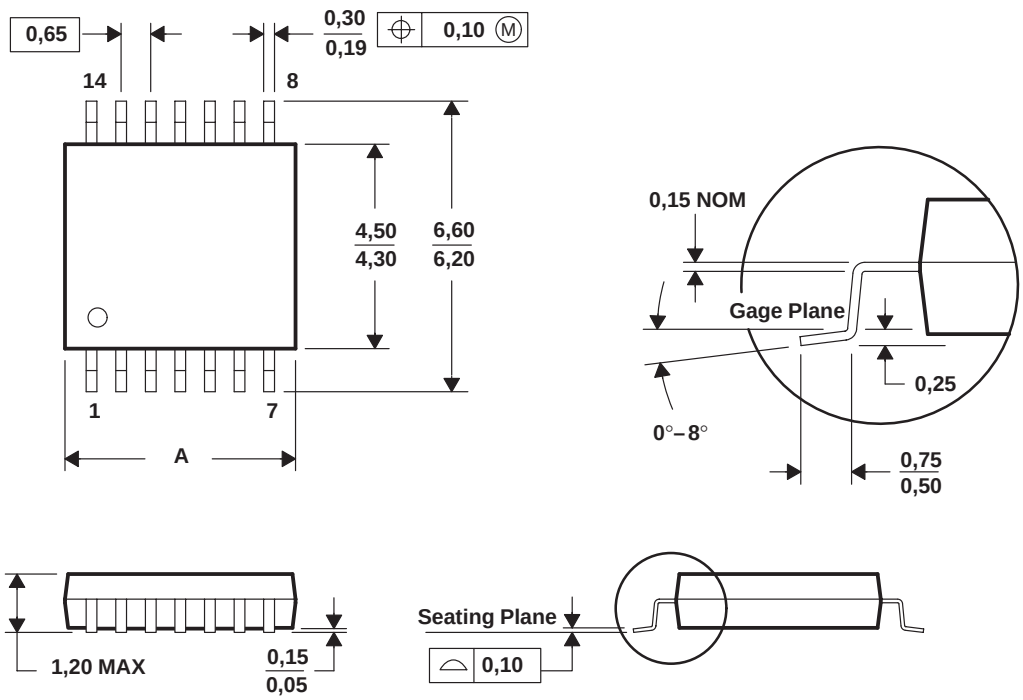

DIM \ PINS **	8	14	16	20	24	28
A MAX	3,10	5,10	5,10	6,60	7,90	9,80
A MIN	2,90	4,90	4,90	6,40	7,70	9,60

4040064/F 01/97

NOTES: A. All linear dimensions are in millimeters.
B. This drawing is subject to change without notice.
C. Body dimensions do not include mold flash or protrusion not to exceed 0,15.
D. Falls within JEDEC MO-153

IMPORTANT NOTICE

Texas Instruments Incorporated and its subsidiaries (TI) reserve the right to make corrections, modifications, enhancements, improvements, and other changes to its products and services at any time and to discontinue any product or service without notice. Customers should obtain the latest relevant information before placing orders and should verify that such information is current and complete. All products are sold subject to TI's terms and conditions of sale supplied at the time of order acknowledgment.

TI warrants performance of its hardware products to the specifications applicable at the time of sale in accordance with TI's standard warranty. Testing and other quality control techniques are used to the extent TI deems necessary to support this warranty. Except where mandated by government requirements, testing of all parameters of each product is not necessarily performed.

TI assumes no liability for applications assistance or customer product design. Customers are responsible for their products and applications using TI components. To minimize the risks associated with customer products and applications, customers should provide adequate design and operating safeguards.

TI does not warrant or represent that any license, either express or implied, is granted under any TI patent right, copyright, mask work right, or other TI intellectual property right relating to any combination, machine, or process in which TI products or services are used. Information published by TI regarding third-party products or services does not constitute a license from TI to use such products or services or a warranty or endorsement thereof. Use of such information may require a license from a third party under the patents or other intellectual property of the third party, or a license from TI under the patents or other intellectual property of TI.

Reproduction of information in TI data books or data sheets is permissible only if reproduction is without alteration and is accompanied by all associated warranties, conditions, limitations, and notices. Reproduction of this information with alteration is an unfair and deceptive business practice. TI is not responsible or liable for such altered documentation.

Resale of TI products or services with statements different from or beyond the parameters stated by TI for that product or service voids all express and any implied warranties for the associated TI product or service and is an unfair and deceptive business practice. TI is not responsible or liable for any such statements.

Following are URLs where you can obtain information on other Texas Instruments products and application solutions:

Products		**Applications**	
Amplifiers	amplifier.ti.com	Audio	www.ti.com/audio
Data Converters	dataconverter.ti.com	Automotive	www.ti.com/automotive
DSP	dsp.ti.com	Broadband	www.ti.com/broadband
Interface	interface.ti.com	Digital Control	www.ti.com/digitalcontrol
Logic	logic.ti.com	Military	www.ti.com/military
Power Mgmt	power.ti.com	Optical Networking	www.ti.com/opticalnetwork
Microcontrollers	microcontroller.ti.com	Security	www.ti.com/security
		Telephony	www.ti.com/telephony
		Video & Imaging	www.ti.com/video
		Wireless	www.ti.com/wireless

Mailing Address: Texas Instruments
Post Office Box 655303 Dallas, Texas 75265

Copyright © 2004, Texas Instruments Incorporated