Zibo Seno Electronic Engineering Co., Ltd.

淄博圣诺

UR4KB05 – UR4KB100

4.0A BRIDGE RECTIFIER

Features

- Diffused Junction
- Low Forward Voltage Drop
- High Current Capability
- High Reliability
- High Surge Current Capability
- Ideal for Printed Circuit Boards

D3K

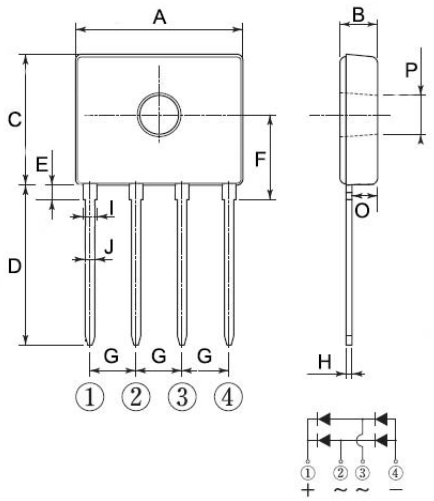

D3K		
Dim	**Min**	**Max**
A	13.5	14.6
B	3.00	3.60
C	10.2	11.0
D	13.0	14.4
E	1.20	2.20
F	6.70	7.30
G	3.51	4.11
H	0.30	0.55
I	1.20	1.42
J	0.66	0.86
O	1.80	2.40
P	3.00∅	3.40∅
All Dimensions in mm		

Mechanical Data

- Case: Molded Plastic
  Terminals: Plated Leads Solderable per MIL-STD-202, Method 208
- Polarity: As Marked on Body
- Weight: 1.7 grams (approx.)
- Mounting Position: Any
- Marking: Type Number
- **Lead Free: For RoHS / Lead Free Version**

Maximum Ratings and Electrical Characteristics @T_A=25°C unless otherwise specified

Single Phase, half wave, 60Hz, resistive or inductive load.
For capacitive load, derate current by 20%.

Characteristic	Symbol	UR4K B05	UR4K B10	UR4K B20	UR4K B40	UR4K B60	UR4K B80	UR4K B100	Unit
Peak Repetitive Reverse Voltage Working Peak Reverse Voltage DC Blocking Voltage	V_{RRM} V_{RWM} V_R	50	100	200	400	600	800	1000	V
RMS Reverse Voltage	$V_{R(RMS)}$	35	70	140	280	420	560	700	V
Average Rectified Output Current (Note 1) @T_A = 50°C	I_O	4.0							A
Non-Repetitive Peak Forward Surge Current 8.3ms Single half sine-wave superimposed on rated load (JEDEC Method)	I_{FSM}	125							A
Forward Voltage (per element) @I_F = 4.0A	V_{FM}	1.0							V
Peak Reverse Current @T_A = 25°C At Rated DC Blocking Voltage @T_A = 100°C	I_{RM}	2 500							µA
Typical Thermal Resistance (Note 3)	$R_{\theta JA}$	35							K/W
Operating and Storage Temperature Range	T_j, T_{STG}	-55 to +150							°C

Note: 1. Leads maintained at ambient temperature at a distance of 9.5mm from the case.
2. Measured at 1.0 MHz and applied reverse voltage of 4.0V D.C.
3. Thermal resistance junction to ambient mounted on PC board with 12mm^2 copper pad.

Download from alldatasheet.com

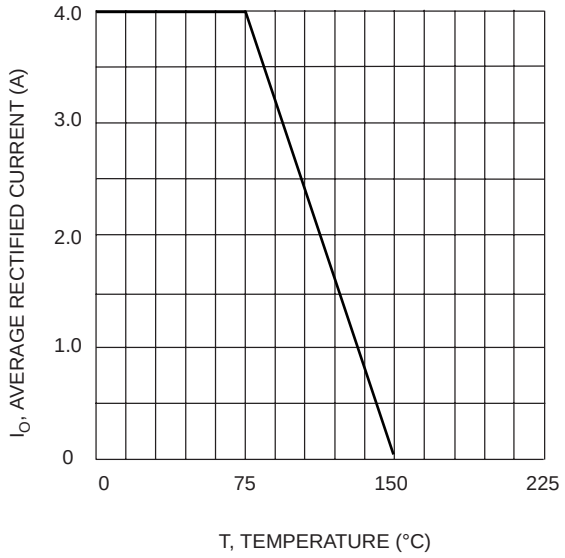

Fig. 1 Forward Current Derating Curve

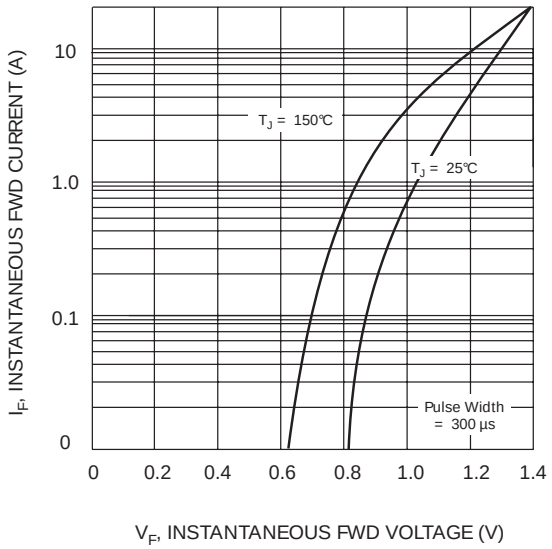

Fig. 2 Typical Fwd Characteristics

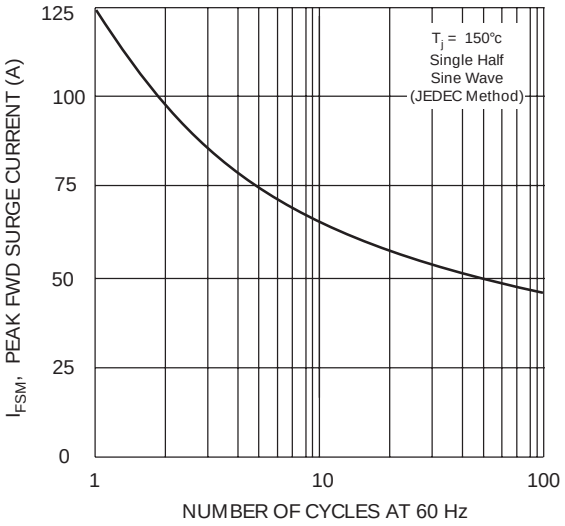

Fig. 3 Max Non-Repetitive Peak Fwd Surge Current

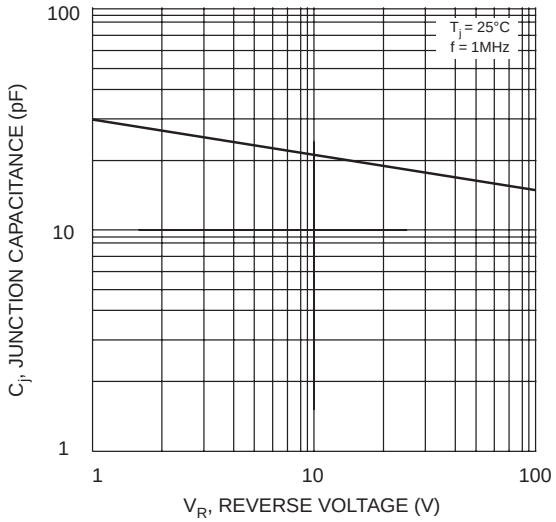

Fig. 4 Typical Junction Capacitance

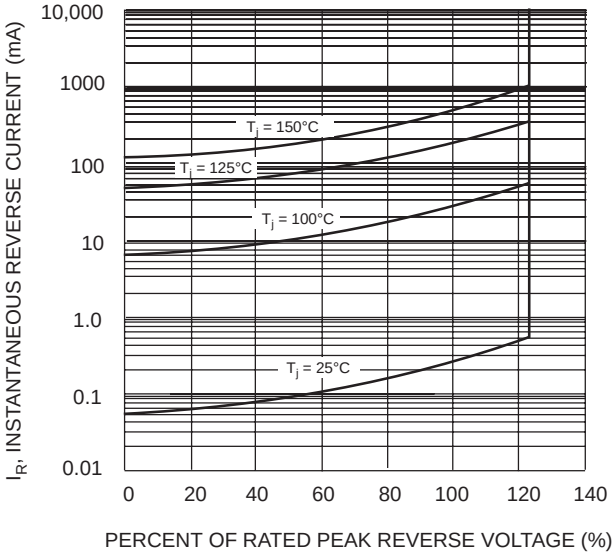

Fig. 5 Typical Reverse Characteristics

Download from alldatasheet.com