19-5527; Rev 0; 9/10

PMBus 6-Channel Power-Supply Manager

MAX34440

General Description

The MAX34440 is a complex system monitor that can manage up to six power supplies. The power-supply manager monitors the power-supply output voltage and constantly checks for user-programmable overvoltage and undervoltage thresholds. It can also margin the power-supply output voltage up or down to a user-programmable level. The margining is performed in a closed-loop arrangement whereby the device automatically adjusts a pulse-width-modulated (PWM) output and then measures the resultant output voltage. The power-supply manager can also sequence the supplies in any order at both power-up and power-down. With the addition of an external current-sense amplifier, the device can also monitor currents.

Applications

Network Switches/Routers

Base Stations

Servers

Smart Grid Network Systems

Industrial Controls

Features

- **6 Channels of Power-Supply Management**
  - **Voltage Measurement/Monitoring**
    - **Differential 12-Bit 1% Accurate ADC**
    - **Min/Max Threshold Excursion Detection**
  - **Supports Current Monitoring with External Current-Sense Amplifier**
  - **Automatic Closed-Loop Margining**
  - **Programmable Up and Down Sequencing**
  - **Power-Good Output**
- **Supports Up to Eight Temperature Sensors**
  - **Two Remote Diode Temperature Sensors**
  - **Five Local Temperature Sensors**
  - **One Internal Temperature Sensor**
  - **Fault Detection on All Temp Sensors**
- **PMBus™-Compliant Command Interface**
- **I^2C/SMBus™-Compatible Serial Bus with Bus Timeout Function**
- **On-Board Nonvolatile Fault Logging and Default Configuration Setting**
- **No External Clocking Required**
- **+3.3V Supply Voltage**

Ordering Information

PART	TEMP RANGE	PIN-PACKAGE
MAX34440ETL+	-40°C to +85°C	40 TQFN-EP*
MAX34440ETL+T	-40°C to +85°C	40 TQFN-EP*

+Denotes a lead(Pb)-free/RoHS-compliant package.
T = Tape and reel.
**EP = Exposed pad.*

PMBus is a trademark of SMIF, Inc.

SMBus is a trademark of Intel Corp.

Note: *Some revisions of this device may incorporate deviations from published specifications known as errata. Multiple revisions of any device may be simultaneously available through various sales channels. For information about device errata, go to: **www.maxim-ic.com/errata**.*

For pricing, delivery, and ordering information, please contact Maxim Direct at 1-888-629-4642, or visit Maxim's website at www.maxim-ic.com.

PMBus 6-Channel Power-Supply Manager

TABLE OF CONTENTS

Absolute Maximum Ratings . . . 6
Recommended Operating Conditions . . . 6
DC Electrical Characteristics . . . 6
I²C/SMBus Interface Electrical Specifications . . . 8
I²C/SMBus Timing . . . 8
Typical Operating Characteristics . . . 9
Pin Configuration . . . 10
Pin Description . . . 10
Block Diagram . . . 12
Multiple Device Connection Diagram . . . 13
Detailed Description . . . 14
- Address Select . . . 16
- SMBus/PMBus Operation . . . 16
  - SMBus/PMBus Communication Examples . . . 16
- Group Command . . . 17
  - Group Command Write Format . . . 17
- Addressing . . . 17
- ALERT and Alert Response Address (ARA) . . . 17
  - Alert Response Address (ARA) Byte Format . . . 18
- Host Sends or Reads Too Few Bits . . . 18
- Host Sends or Reads Too Few Bytes . . . 18
- Host Sends Too Many Bytes or Bits . . . 18
- Host Reads Too Many Bytes or Bits . . . 18
- Host Sends Improperly Set Read Bit in the Slave Address Byte . . . 18
- Unsupported Command Code Received . . . 18
- Invalid Data Received . . . 18
- Host Reads from a Write-Only Command . . . 19
- Host Writes to a Read-Only Command . . . 19
- SMBus Timeout . . . 19
- PMBus Operation . . . 19
- PMBus Protocol Support . . . 19
- Data Format . . . 19
- Interpreting Received DIRECT Format Values . . . 19
- Sending a DIRECT Format Value . . . 20
- Fault Management and Reporting . . . 21
- System Watchdog Timer . . . 21
- Temperature Sensor Operation . . . 22

TABLE OF CONTENTS (continued)

PMBus Commands . . . 23
PAGE (00h) . . . 23
OPERATION (01h) . . . 24
ON_OFF_CONFIG (02h) . . . 25
CLEAR_FAULTS (03h) . . . 25
WRITE_PROTECT (10h) . . . 25
STORE_DEFAULT_ALL (11h) . . . 26
RESTORE_DEFAULT_ALL (12h) . . . 26
CAPABILITY (19h) . . . 26
VOUT_MODE (20h) . . . 26
VOUT_MARGIN_HIGH (25h) . . . 26
VOUT_MARGIN_LOW (26h) . . . 27
VOUT_SCALE_MONITOR (2Ah) . . . 27
IOUT_CAL_GAIN (38h) . . . 27
VOUT_OV_FAULT_LIMIT (40h) . . . 28
VOUT_OV_WARN_LIMIT (42h) . . . 28
VOUT_UV_WARN_LIMIT (43h) . . . 28
VOUT_UV_FAULT_LIMIT (44h) . . . 28
IOUT_OC_WARN_LIMIT (46h) . . . 29
IOUT_OC_FAULT_LIMIT (4Ah) . . . 29
OT_FAULT_LIMIT (4Fh) . . . 29
OT_WARN_LIMIT (51h) . . . 30
POWER_GOOD_ON (5Eh) . . . 30
POWER_GOOD_OFF (5Fh) . . . 31
TON_DELAY (60h) . . . 31
TON_MAX_FAULT_LIMIT (62h) . . . 31
TOFF_DELAY (64h) . . . 31
STATUS_BYTE (78h) . . . 32
STATUS_WORD (79h) . . . 32
STATUS_VOUT (7Ah) . . . 33
STATUS_CML (7Eh) . . . 33
STATUS_MFR_SPECIFIC (80h) . . . 33
READ_VOUT (8Bh) . . . 34
READ_IOUT (8Ch) . . . 34
READ_TEMPERATURE_1 (8Dh) . . . 34
PMBUS_REVISION (98h) . . . 34
MFR_ID (99h) . . . 34

TABLE OF CONTENTS (continued)

MFR_MODEL (9Ah) . . . 34
MFR_REVISION (9Bh) . . . 34
MFR_LOCATION (9Ch) . . . 34
MFR_DATE (9Dh) . . . 34
MFR_SERIAL (9Eh) . . . 34
MFR_MODE (D1h) . . . 35
MFR_VOUT_PEAK (D4h) . . . 36
MFR_IOUT_PEAK (D5h) . . . 36
MFR_TEMPERATURE_PEAK (D6h) . . . 36
MFR_VOUT_MIN (D7h) . . . 36
MFR_FAULT_RESPONSE (D9h) . . . 36
MFR_FAULT_RETRY (DAh) . . . 37
MFR_NV_FAULT_LOG (DCh) . . . 37
MFR_TIME_COUNT (DDh) . . . 40
MFR_MARGIN_CONFIG (E0h) . . . 40
MFR_TEMP_SENSOR_CONFIG (F0h) . . . 41
Applications Information . . . 41
Power-Supply Decoupling . . . 41
Open-Drain Pins . . . 41
Typical Operating Circuit . . . 42
Package Information . . . 42
Revision History . . . 43

LIST OF FIGURES

Figure 1. Power-Supply Sequencing 30
Figure 2. MFR_NV_FAULT_LOG 38

LIST OF TABLES

Table 1. PMBus Command Codes 14
Table 2. PMBus/SMBus Serial-Port Address 16
Table 3. PMBus Command Code Coefficients 20
Table 4. Coefficients for DIRECT Format Value 20
Table 5. Device Parametric Monitoring States 21
Table 6. DS75LV Address Pin Configurations 22
Table 7. Page Commands 23
Table 8. OPERATION Command Byte (When Bit 3 of ON_OFF_CONFIG = 1) 24
Table 9. OPERATION Command Byte (When Bit 3 of ON_OFF_CONFIG = 0) 24
Table 10. ON_OFF_CONFIG (02h) Command Byte 25
Table 11. WRITE_PROTECT Command Byte 25
Table 12. CAPABILITY Command Byte 26
Table 13. VOUT_SCALE_MONITOR 27
Table 14. IOUT_OC_FAULT_LIMIT 29
Table 15. TON_MAX_FAULT_LIMIT 31
Table 16. STATUS_BYTE 32
Table 17. STATUS_WORD 32
Table 18. STATUS_VOUT 33
Table 19. STATUS_CML 33
Table 20. STATUS_MFR_SPECIFIC 33
Table 21. MFR_MODE 35
Table 22. MFR_FAULT_RESPONSE 36
Table 23. MFR_FAULT_RESPONSE Codes 37
Table 24. MFR_NV_FAULT_LOG 38
Table 25. MFR_MARGIN_CONFIG 40
Table 26. MFR_TEMP_SENSOR_CONFIG 41

ABSOLUTE MAXIMUM RATINGS

V_{DD} to V_{SS} .....-0.3V to +5.5V
RS- to V_{SS} .....-0.3V to +0.3V
All Other Pins Except REG18 and
REG25 Relative to V_{SS} .....-0.3V to (V_{DD} + 0.3V)*
Continuous Power Dissipation (T_A = +70°C)
40-Pin TQFN
(derate 35.7mW/°C above +70°C).....2857.1mW

Subject to not exceeding +5.5V.

Operating Temperature Range..... -40°C to +85°C
Storage Temperature Range..... -55°C to +125°C
Lead Temperature (soldering, 10s) .....+260°C
Soldering Temperature (reflow) .....+260°C

Stresses beyond those listed under "Absolute Maximum Ratings" may cause permanent damage to the device. These are stress ratings only, and functional operation of the device at these or any other conditions beyond those indicated in the operational sections of the specifications is not implied. Exposure to absolute maximum rating conditions for extended periods may affect device reliability.

RECOMMENDED OPERATING CONDITIONS

(T_A = -40°C to +85°C.)

PARAMETER	SYMBOL	CONDITIONS	MIN	TYP	MAX	UNITS
V_{DD} Operating Voltage Range	V_{DD}	(Note 1)	2.7		5.5	V
Input Logic 1	V_{IH}		0.7 x V_{DD}		V_{DD} + 0.3	V
Input Logic 0	V_{IL}		-0.3		0.3 x V_{DD}	V
Input Logic-High: SCL, SDA, MSCL, MSDA	V_{I2C_IH}	2.7V ≤ V_{DD} ≤ 3.6V (Note 1)	2.1		V_{DD} + 0.3	V
Input Logic-Low: SCL, SDA, MSCL, MSDA	V_{I2C_IL}	2.7V ≤ V_{DD} ≤ 3.6V (Note 1)	-0.3		+0.8	V

DC ELECTRICAL CHARACTERISTICS

(V_{DD} = 2.7V to 5.5V, T_A = -40°C to +85°C, unless otherwise noted. Typical values are at V_{DD} = 3.3V, T_A = +25°C, unless otherwise noted.)

PARAMETER	SYMBOL	CONDITIONS	MIN	TYP	MAX	UNITS
Supply Current	I_{CPU}	(Note 2)		2.5		mA
	$I_{PROGRAM}$			8		
Brownout Voltage	V_{BO}	Monitors V_{DD} (Note 1)	2.40	2.46	2.55	V
Brownout Hysteresis	V_{BOH}	Monitors V_{DD} (Note 1)		30		mV
Internal System Clock	f_{MOSC}			4.0		MHz
System Clock Error (Note 3)	$f_{ERR:MOSC}$	+25°C ≤ T_A ≤ +85°C	-3		+2	%
		-40°C ≤ T_A ≤ +25°C	-6.5		+1.6	
Output Logic-Low	V_{OL1}	I_{OL} = 4mA (Note 1)			0.4	V
Output Logic-High	V_{OH1}	I_{OH} = -2mA (Note 1)	V_{DD} - 0.5			V
PWM, PSEN Pullup Current	I_{PU}	V_{PIN} = V_{SS}, V_{DD} = 3.3V	38	55	107	µA
ADC Internal Reference				1.225		V
ADC Voltage Measurement Error	V_{ERR}		-1		+1	%
ADC Internal Reference Temperature Drift			-0.5		+0.5	%

DC ELECTRICAL CHARACTERISTICS (continued)

(V_{DD} = 2.7V to 5.5V, T_A = -40°C to +85°C, unless otherwise noted. Typical values are at V_{DD} = 3.3V, T_A = +25°C, unless otherwise noted.)

PARAMETER	SYMBOL	CONDITIONS	MIN	TYP	MAX	UNITS
ADC Internal Reference Initial Accuracy (+25°C)			-1		+1	mV
ADC Full-Scale Input Voltage	V_{FS}		1.213	1.225	1.237	V
ADC Measurement Resolution	V_{LSB}			300		µV
ADC Bit Resolution			12			Bits
RS+ Input Resistance	R_{IN}		15			MΩ
ADC Integral Nonlinearity	INL				±4	LSB
ADC Differential Nonlinearity	DNL				±1	LSB
ADC Offset	V_{OFFSET}			±2		LSB
Internal Temperature Measurement Error		T_A = -40°C to +85°C	-3		+3	°C
Store Default All Time				37		ms
Nonvolatile Log Write Time				12		ms
Nonvolatile Log Delete Time				200		ms
Flash Endurance	N_{FLASH}	T_A = +50°C	20,000			Write Cycles
Data Retention		T_A = +50°C	100			Years
Voltage Sample Rate				5		ms
Current Sample Rate				200		ms
Temperature Sample Rate				1000		ms
Device Startup Time		Measurement from POR until monitoring begins		12		ms
PWM Frequency		Power supply		62.5		kHz
PWM Resolution		Power supply		6		Bits

I²C/SMBus INTERFACE ELECTRICAL SPECIFICATIONS

(V_{DD} = 2.7V to 5.5V, T_A = -40°C to +85°C, unless otherwise noted. Typical values are at V_{DD} = 3.3V, T_A = +25°C, unless otherwise noted.)

PARAMETER	SYMBOL	CONDITIONS	MIN	TYP	MAX	UNITS
SCL Clock Frequency	f_{SCL}		10		100	kHz
Bus Free Time Between STOP and START Conditions	t_{BUF}		4.7			µs
Hold Time (Repeated) START Condition	$t_{HD:STA}$		4.0			µs
Low Period of SCL	t_{LOW}		4.7			µs
High Period of SCL	t_{HIGH}		4.0			µs
Data Hold Time	$t_{HD:DAT}$	Receive	0			ns
		Transmit	300			
Data Setup Time	$t_{SU:DAT}$		100			ns
START Setup Time	$t_{SU:STA}$		4.7			µs
SDA and SCL Rise Time	t_R				300	ns
SDA and SCL Fall Time	t_F				300	ns
STOP Setup Time	$t_{SU:STO}$		4.0			µs
Clock Low Timeout	t_{TO}		25		35	ms

Note 1: All voltages are referenced to ground (V_{SS}). Currents entering the IC are specified as positive, and currents exiting the IC are negative.
Note 2: This does not include pin input/output currents.
Note 3: Guaranteed by design.

I²C/SMBus Timing

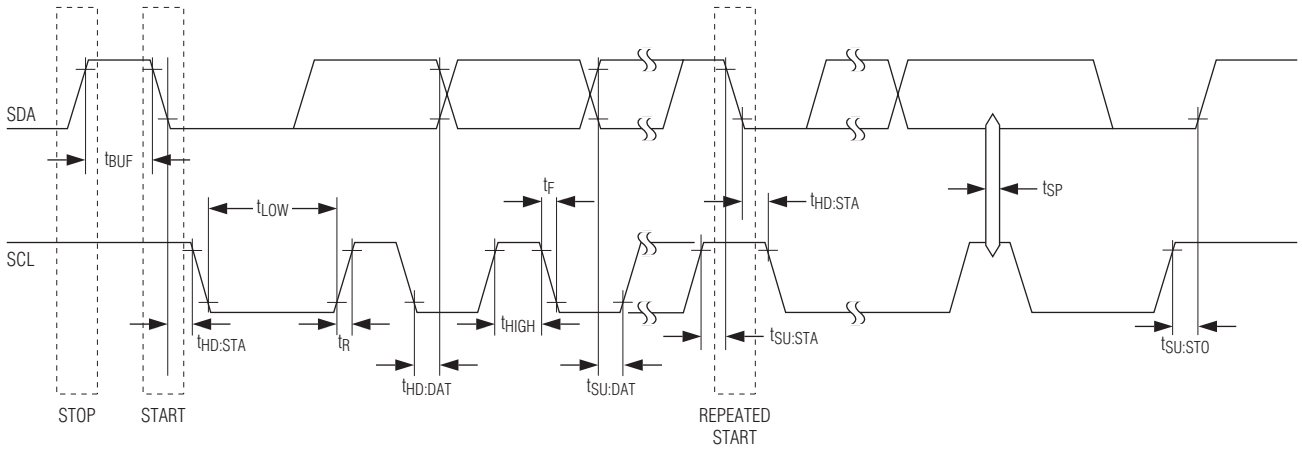

NOTE: TIMING IS REFERENCED TO $V_{IL(MAX)}$ AND $V_{IH(MIN)}$.

Typical Operating Characteristics

(T_A = +25°C, unless otherwise noted.)

SUPPLY CURRENT vs. TEMPERATURE

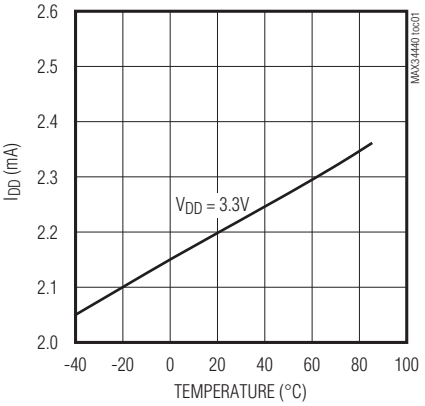

SUPPLY CURRENT vs. SUPPLY VOLTAGE

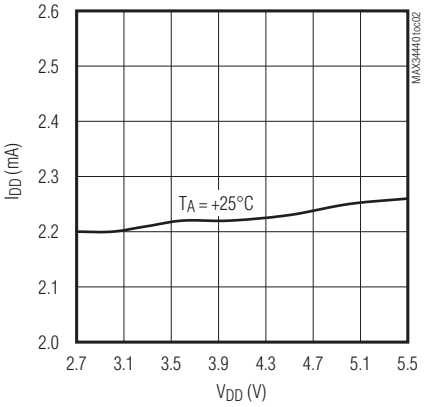

WEAK PULLUP VOLTAGE vs. TIME AT POR (UNLOADED PINS, V_{DD} = 3.3V)

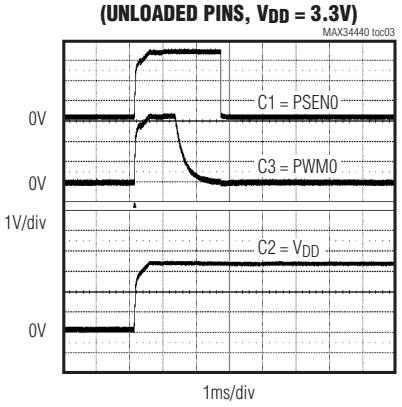

I_{DD} vs. TIME DURING A NONVOLATILE LOG WRITE (T_A = +25°C, V_{DD} = 3.3V)

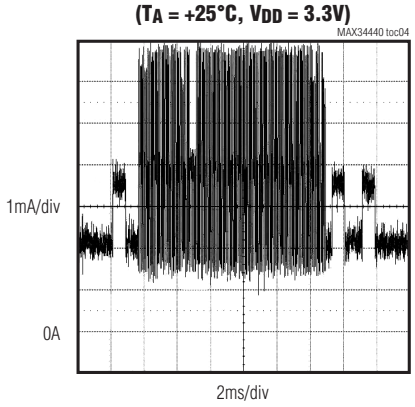

FILTERED MARGINING VOLTAGE vs. TIME DURING MARGIN UP

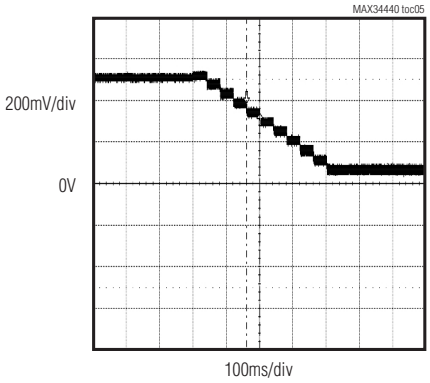

PMBus 6-Channel Power-Supply Manager

Pin Configuration

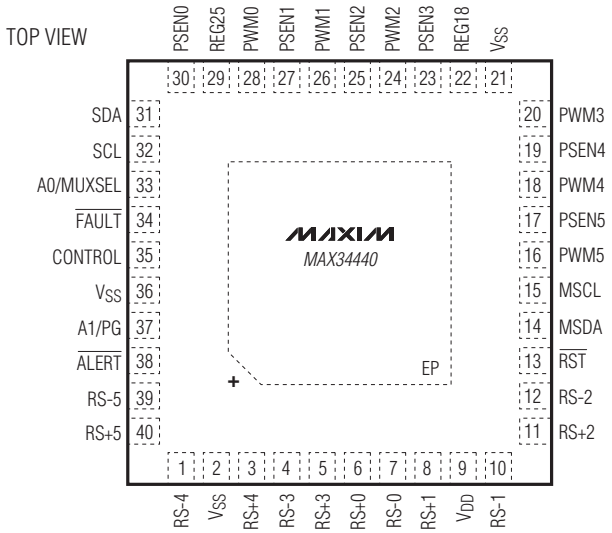

TQFN
(6mm × 6mm × 0.75mm)

Pin Description

PIN	NAME	FUNCTION
1	RS-4	Ground Reference for ADC4 Voltage Measurement
2, 21, 36	V_{SS}	Digital-Supply Return Node (Ground)
3	RS+4	Power-Supply ADC Voltage-Sense Input, Measurement Relative to RS-4
4	RS-3	Ground Reference for ADC3 Voltage Measurement
5	RS+3	Power-Supply ADC Voltage-Sense Input, Measurement Relative to RS-3
6	RS+0	Power-Supply ADC Voltage-Sense Input, Measurement Relative to RS-0
7	RS-0	Ground Reference for ADC0 Voltage Measurement
8	RS+1	Power-Supply ADC Voltage-Sense Input, Measurement Relative to RS-1
9	V_{DD}	Supply Voltage. Bypass V_{DD} to V_{SS} with a 0.1µF capacitor.
10	RS-1	Ground Reference for ADC1 Voltage Measurement
11	RS+2	Power-Supply ADC Voltage-Sense Input, Measurement Relative to RS-2
12	RS-2	Ground Reference for ADC2 Voltage Measurement
13	$\overline{RST}$	Reset Active-Low Input
14	MSDA	Master I^2C Data Input/Output. Open-drain output.
15	MSCL	Master I^2C Clock Output. Open-drain output.
16	PWM5	PWM Margin Output #5. High impedance when the margining is disabled. A 100% duty cycle implies this pin is continuously high.
17	PSEN5	Power-Supply Enable Output #5. Programmable through MFR_MODE for either active high or active low and either open drain or CMOS push-pull.

Pin Description (continued)

PIN	NAME	FUNCTION
18	PWM4	PWM Margin Output #4. High impedance when the margining is disabled. A 100% duty cycle implies this pin is continuously high.
19	PSEN4	Power-Supply Enable Output #4. Programmable through MFR_MODE for either active high or active low and either open drain or CMOS push-pull.
20	PWM3	PWM Margin Output #3. High impedance when the margining is disabled. A 100% duty cycle implies this pin is continuously high.
22	REG18	Regulator for Low-Voltage Digital Circuitry. Bypass REG18 to V_{SS} with 1µF and 10nF capacitors. Do not connect other circuitry to this pin.
23	PSEN3	Power-Supply Enable Output #3. Programmable through MFR_MODE for either active high or active low and either open drain or CMOS push-pull.
24	PWM2	PWM Margin Output #2. High impedance when the margining is disabled. A 100% duty cycle implies this pin is continuously high.
25	PSEN2	Power-Supply Enable Output #2. Programmable through MFR_MODE for either active high or active low and either open drain or CMOS push-pull.
26	PWM1	PWM Margin Output #1. High impedance when the margining is disabled. A 100% duty cycle implies this pin is continuously high.
27	PSEN1	Power-Supply Enable Output #1. Programmable through MFR_MODE for either active high or active low and either open drain or CMOS push-pull.
28	PWM0	PWM Margin Output #0. High impedance when the margining is disabled. A 100% duty cycle implies this pin is continuously high.
29	REG25	Regulator for Analog Circuitry. Bypass REG25 to V_{SS} with 1µF and 10nF capacitors. Do not connect other circuitry to this pin.
30	PSEN0	Power-Supply Enable Output #0. Programmable through MFR_MODE for either active high or active low and either open drain or CMOS push-pull.
31	SDA	I^2C/SMBus-Compatible Input/Output
32	SCL	I^2C/SMBus-Compatible Clock Input
33	A0/MUXSEL	SMBus Address 0 Input/Multiplexer Control Output. This dual-function pin is sampled on device power-up to determine the SMBus address; connect a 100kΩ resistor from this pin to either V_{SS} or V_{DD} to set the address. After device power-up, this pin becomes an output that acts as voltage/current selector for an external analog multiplexer. MUXSEL is low for voltage measurements and high for current measurements.
34	$\overline{FAULT}$	Active-Low, Open-Drain Fault Input/Output. This pin is asserted when one or more of the power supplies in a global group are shut down due to a fault condition. Also, this pin is monitored and, when it is asserted, all power supplies in a global group are shut down. This pin is used to provide hardware control for power supplies in a global group across multiple devices. This output is unconditionally deasserted when $\overline{RST}$ is asserted or the device is power cycled. This pin has a 50µs deglitch filter.
35	CONTROL	Device Enable. Option through ON_OFF_CONFIG for active-low or active-high power-supply control. This pin has a 50µs deglitch filter.
37	A1/PG	SMBus Address 1 Input/Power-Good Output. This dual-function pin is sampled on device power-up to determine the SMBus address; connect a 100kΩ resistor from this pin to either V_{SS} or V_{DD} to set the address. After device power-up, this pin becomes an output that transitions high when all the enabled power supplies are above their associated POWER_GOOD_ON thresholds.
38	$\overline{ALERT}$	Active-Low, Open-Drain Alert Output

PMBus 6-Channel Power-Supply Manager

Pin Description (continued)

PIN	NAME	FUNCTION
39	RS-5	Ground Reference for ADC5 Voltage Measurement
40	RS+5	Power-Supply ADC Voltage-Sense Input, Measurement Relative to RS-5
—	EP	Exposed Pad (Bottom Side of Package). Connect EP to V_{SS}.

Note: *All pins except V_{DD}, V_{SS}, REG18, REG25, ADC, and the EP are high impedance with a 50µA pullup during device power-up and reset. After device reset, the weak pullup is removed, and the pin is configured as input or output.*

Block Diagram

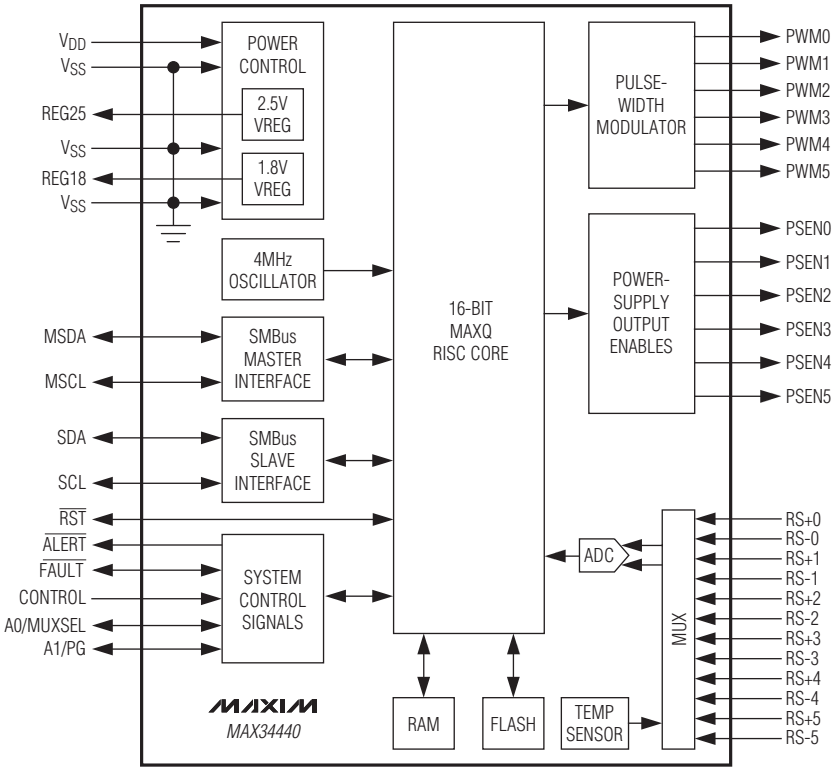

Multiple Device Connection Diagram

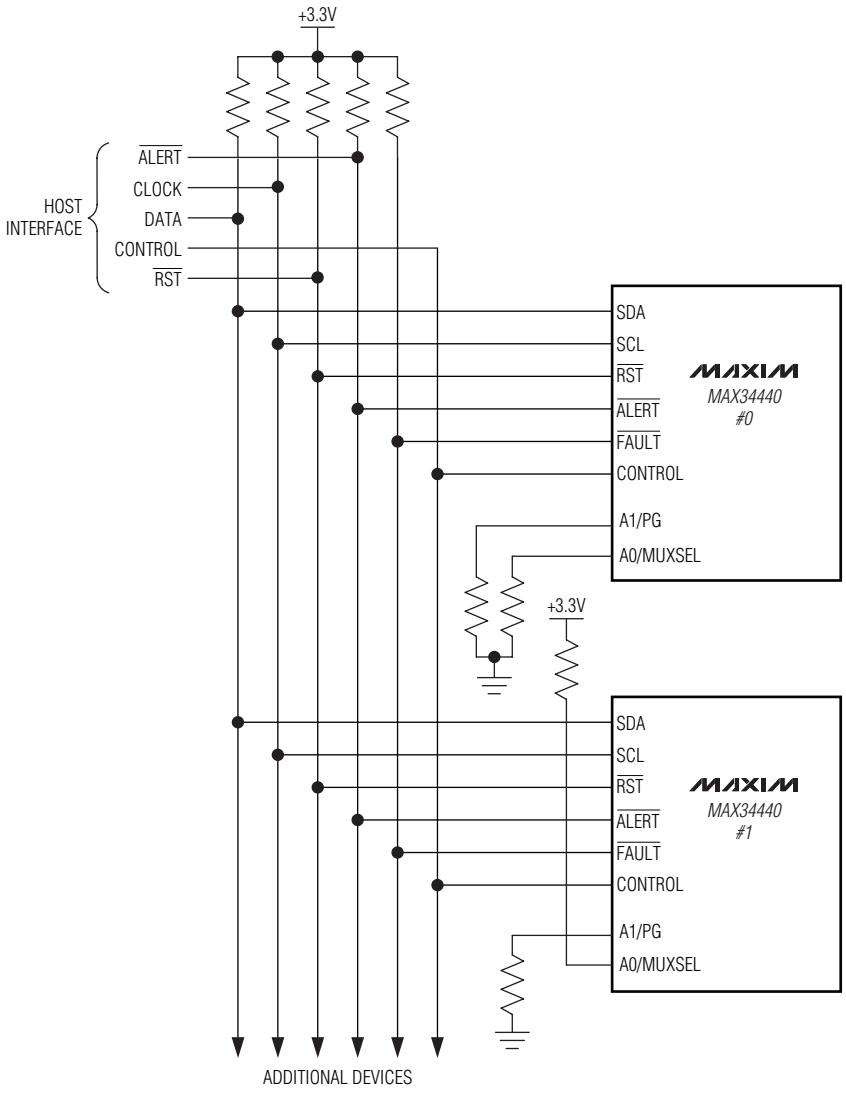

PMBus 6-Channel Power-Supply Manager

Detailed Description

The MAX34440 is a highly integrated system monitor based upon a 16-bit MAXQ® microcontroller with factory-programmed functionality to monitor up to six power supplies. The device provides power-supply closed-loop control, and local/remote thermal-sensing facilities.

The power-supply manager monitors the power-supply output voltage and constantly checks for user-programmable overvoltage and undervoltage thresholds. It also can margin the power-supply output voltage up or down by a user-programmable level. The margining is performed in a closed-loop arrangement, whereby the device automatically adjusts a pulse-width-modulated (PWM) output and then measures the resultant output voltage. The power-supply manager can also sequence the supplies in any order at both power-up and power-down. With the addition of an external current-sense amplifier, the device can also monitor currents.

Thermal monitoring can be accomplished using up to eight temperature sensors, including an on-chip thermal sensor, four DS75LV digital thermometers, and a MAX6695 dual remote/local thermal temperature sensor. Communication with the DS75LV and MAX6695 temperature sensors is conducted through a dedicated I^2C/SMBus interface.

The device provides $\overline{\text{ALERT}}$ and $\overline{\text{FAULT}}$ output signals. Host communications are conducted through a PMBus-compatible communications port. Address input connections are also provided to allow up to four MAX34440 devices to reside on the system's I/O bus.

Table 1. PMBus Command Codes

CODE	COMMAND NAME	TYPE	PAGE 0–5	PAGE 6–13	PAGE 255	NO. OF BYTES	FLASH STORED (NOTE 2)	DEFAULT VALUE (NOTE 2)
			(NOTE 1)					
00h	PAGE	R/W Byte	R/W	R/W	R/W	1	N	00h
01h	OPERATION	R/W Byte	R/W	—	W	1	N	00h
02h	ON_OFF_CONFIG	R/W Byte	R/W	R/W	R/W	1	Y	1Ah
03h	CLEAR_FAULTS	Send Byte	W	W	W	0	N	—
10h	WRITE_PROTECT	R/W Byte	R/W	R/W	R/W	1	N	00h
11h	STORE_DEFAULT_ALL	Send Byte	W	W	W	0	N	—
12h	RESTORE_DEFAULT_ALL	Send Byte	W	W	W	0	N	—
19h	CAPABILITY	Read Byte	R	R	R	1	N	00h/10h
20h	VOUT_MODE	Read Byte	R	R	R	1	FIXED	40h
25h	VOUT_MARGIN_HIGH	R/W Word	R/W	—	—	2	Y	0000h
26h	VOUT_MARGIN_LOW	R/W Word	R/W	—	—	2	Y	0000h
2Ah	VOUT_SCALE_MONITOR	R/W Word	R/W	—	—	2	Y	7FFFh
38h	IOUT_CAL_GAIN	R/W Word	R/W	—	—	2	Y	0000h
40h	VOUT_OV_FAULT_LIMIT	R/W Word	R/W	—	—	2	Y	7FFFh
42h	VOUT_OV_WARN_LIMIT	R/W Word	R/W	—	—	2	Y	7FFFh
43h	VOUT_UV_WARN_LIMIT	R/W Word	R/W	—	—	2	Y	0000h
44h	VOUT_UV_FAULT_LIMIT	R/W Word	R/W	—	—	2	Y	0000h
46h	IOUT_OC_WARN_LIMIT	R/W Word	R/W	—	—	2	Y	7FFFh
4Ah	IOUT_OC_FAULT_LIMIT	R/W Word	R/W	—	—	2	Y	0000h
4Fh	OT_FAULT_LIMIT	R/W Word	—	R/W	—	2	Y	7FFFh
51h	OT_WARN_LIMIT	R/W Word	—	R/W	—	2	Y	7FFFh
5Eh	POWER_GOOD_ON	R/W Word	R/W	—	—	2	Y	0000h
5Fh	POWER_GOOD_OFF	R/W Word	R/W	—	—	2	Y	0000h

MAXQ is a registered trademark of Maxim Integrated Products, Inc.

Table 1. PMBus Command Codes (continued)

CODE	COMMAND NAME	TYPE	PAGE 0–5	PAGE 6–13	PAGE 255	NO. OF BYTES	FLASH STORED (NOTE 2)	DEFAULT VALUE (NOTE 2)
			(NOTE 1)					
60h	TON_DELAY	R/W Word	R/W	—	—	2	Y	0000h
62h	TON_MAX_FAULT_LIMIT	R/W Word	R/W	—	—	2	Y	0000h
64h	TOFF_DELAY	R/W Word	R/W	—	—	2	Y	0000h
78h	STATUS_BYTE	Read Byte	R	R	R	1	N	00h
79h	STATUS_WORD	Read Word	R	R	R	2	N	0000h
7Ah	STATUS_VOUT	Read Byte	R	—	—	1	N	00h
7Eh	STATUS_CML	Read Byte	R	R	R	1	N	00h
80h	STATUS_MFR_SPECIFIC	Read Byte	R	R	—	1	N	00h
8Bh	READ_VOUT	Read Word	R	—	—	2	N	0000h
8Ch	READ_IOUT	Read Word	R	—	—	2	N	0000h
8Dh	READ_TEMPERATURE_1	Read Word	—	R	—	2	N	0000h
98h	PMBUS_REVISION	Read Byte	R	R	R	1	FIXED	11h
99h	MFR_ID	Read Byte	R	R	R	1	FIXED	4Dh
9Ah	MFR_MODEL	Read Byte	R	R	R	1	FIXED	51h
9Bh	MFR_REVISION	Read Word	R	R	R	2	FIXED	3030h
9Ch	MFR_LOCATION	Block R/W	R/W	R/W	R/W	8	Y	(Note 3)
9Dh	MFR_DATE	Block R/W	R/W	R/W	R/W	8	Y	(Note 3)
9Eh	MFR_SERIAL	Block R/W	R/W	R/W	R/W	8	Y	(Note 3)
D1h	MFR_MODE	R/W Word	R/W	R/W	R/W	2	Y	0000h
D4h	MFR_VOUT_PEAK	R/W Word	R/W	—	—	2	N	0000h
D5h	MFR_IOUT_PEAK	R/W Word	R/W	—	—	2	N	0000h
D6h	MFR_TEMPERATURE_PEAK	R/W Word	—	R/W	—	2	N	8000h
D7h	MFR_VOUT_MIN	R/W Word	R/W	—	—	2	N	7FFFh
D9h	MFR_FAULT_RESPONSE	R/W Word	R/W	—	—	2	Y	0000h
DAh	MFR_FAULT_RETRY	R/W Word	R/W	R/W	R/W	2	Y	0000h
DCh	MFR_NV_FAULT_LOG	Block Read	R	R	R	255	Y	(Note 4)
DDh	MFR_TIME_COUNT	Block Read	R	R	R	4	N	(Note 5)
E0h	MFR_MARGIN_CONFIG	R/W Word	R/W	—	—	2	Y	0000h
F0h	MFR_TEMP_SENSOR_CONFIG	R/W Word	—	R/W	—	2	Y	0000h

Note 1: Common commands are shaded. Access through any page results in the same device response.

Note 2: In the **Flash Stored** column, an "N" indicates that this parameter is not stored in flash memory when the STORE_DEFAULT_ALL command is executed and the value shown in the **Default Value** column is automatically loaded upon power-on reset or when the $\overline{RST}$ pin is asserted. A "Y" in the **Flash Stored** column indicates that the currently loaded value in this parameter is stored in flash memory when the STORE_DEFAULT_ALL command is executed and is automatically loaded upon power-on reset or when the $\overline{RST}$ pin is asserted and the value shown in the **Default Value** column is the value when shipped from the factory. "FIXED" in the **Flash Stored** column means this value is fixed at the factory and cannot be changed.

Note 3: The factory-set default value for this 8-byte block is 3130313031303130h.

Note 4: The factory-set default value for the complete block of the MFR_NV_FAULT_LOG is FFh.

Note 5: The power-on reset value for this 4-byte block is 00000000h.

Table 2. PMBus/SMBus Serial-Port Address

A1	A0	7-BIT SLAVE ADDRESS
100kΩ to V_{SS}	100kΩ to V_{SS}	1101 010 (D4h)
	100kΩ to V_{DD}	1101 011 (D6h)
100kΩ to V_{DD}	100kΩ to V_{SS}	1101 100 (D8h)
	100kΩ to V_{DD}	1101 101 (DAh)

Address Select

On device power-up, the device samples the A0 and A1 pins to determine the PMBus/SMBus serial-port address.

SMBus/PMBus Operation

The device implements the PMBus command structure using the SMBus format. The structure of the data flow between the host and the slave is shown below for several different types of transactions. Data is sent most significant bit (MSB) first.

SMBus/PMBus Communication Examples

READ WORD FORMAT

1	7	1	1	8	1	1	7	1	1	8	1	8	1	1
S	SLAVE ADDRESS	W	A	COMMAND CODE	A	Sr	SLAVE ADDRESS	R	A	DATA BYTE LOW	A	DATA BYTE HIGH	NA	P

READ BYTE FORMAT

1	7	1	1	8	1	1	7	1	1	8	1	1
S	SLAVE ADDRESS	W	A	COMMAND CODE	A	Sr	SLAVE ADDRESS	R	A	DATA BYTE	NA	P

WRITE WORD FORMAT

1	7	1	1	8	1	8	1	8	1	1
S	SLAVE ADDRESS	W	A	COMMAND CODE	A	DATA BYTE LOW	A	DATA BYTE HIGH	A	P

WRITE BYTE FORMAT

1	7	1	1	8	1	8	1	1
S	SLAVE ADDRESS	W	A	COMMAND CODE	A	DATA BYTE	A	P

SEND BYTE FORMAT

1	7	1	1	8	1	1
S	SLAVE ADDRESS	W	A	COMMAND CODE	A	P

KEY:

S = START
Sr = REPEATED START
P = STOP
W = WRITE BIT (0)
R = READ BIT (1)
A = ACKNOWLEDGE (0)
NA = NOT ACKNOWLEDGE (1)
SHADED BLOCK = SLAVE TRANSACTION

Group Command

The device supports the group command. With the group command, a host can write different data to multiple devices on the same serial bus with one long continuous data stream. All the devices addressed during this transaction wait for the host to issue a STOP before beginning to respond to the command.

Group Command Write Format

SLAVE ADDRESS, COMMAND BYTE, AND DATA WORD FOR DEVICE 1

1	7	1	1	8	1	8	1	8	1	
S	SLAVE ADDRESS	W	A	COMMAND CODE	A	DATA BYTE LOW	A	DATA BYTE HIGH	A	• • •

SLAVE ADDRESS, COMMAND BYTE, AND DATA BYTE FOR DEVICE 2

1	7	1	1	8	1	8	1	
Sr	SLAVE ADDRESS	W	A	COMMAND CODE	A	DATA BYTE	A	• • •

SLAVE ADDRESS AND SEND BYTE FOR DEVICE 3

1	7	1	1	8	1	
Sr	SLAVE ADDRESS	W	A	COMMAND CODE	A	• • •

• • •

SLAVE ADDRESS, COMMAND BYTE, AND DATA WORD FOR DEVICE N

1	7	1	1	8	1	8	1	8	1	1
Sr	SLAVE ADDRESS	W	A	COMMAND CODE	A	DATA BYTE LOW	A	DATA BYTE HIGH	A	P

KEY:

S = START

Sr = REPEATED START

P = STOP

W = WRITE BIT (0)

A = ACKNOWLEDGE (0)

SHADED BLOCK = SLAVE TRANSACTION

Addressing

The device responds to receiving its fixed slave address by asserting an acknowledge (ACK) on the bus. The device does not respond to a general call address; it only responds when it receives its fixed slave address. The only exception to this operation is if the $\overline{\text{ALERT}}$ output is enabled (ALERT bit = 1 in MFR_MODE) and $\overline{\text{ALERT}}$ has been asserted. When this condition occurs, the device only recognizes the alert response address (0001 100, 18h). See the *ALERT and Alert Response Address (ARA)* section for more details.

ALERT and Alert Response Address (ARA)

If the $\overline{\text{ALERT}}$ output is enabled (ALERT bit = 1 in MFR_MODE), when a fault occurs the device asserts the $\overline{\text{ALERT}}$ signal and then waits for the host to send the alert response address (ARA) as shown in the *Alert Response Address (ARA) Byte Format* section. **While waiting for the ARA, the device does not respond to its fixed slave address.**

When the ARA is received and the device is asserting $\overline{\text{ALERT}}$, the device ACKs it and then attempts to place its fixed slave address on the bus by arbitrating the bus, since another device could also try to respond to the ARA. The rules of arbitration state that the lowest address device wins. If the device wins the arbitration, it deasserts $\overline{\text{ALERT}}$ and begins to respond to its fixed slave address. If the device loses arbitration, it keeps $\overline{\text{ALERT}}$ asserted and waits for the host to once again send the ARA.

Alert Response Address (ARA) Byte Format

1	7	1	1	8	1	1
S	ARA 0001100	R	A	DEVICE SLAVE ADDRESS WITH LSB = 0	NA	P

Host Sends or Reads Too Few Bits

If for any reason the host does not complete writing a full byte or reading a full byte from the device before a START or STOP is received, the device does the following:

1) Ignores the command.
2) Sets the CML bit in STATUS_BYTE.
3) Sets the CML bit in STATUS_WORD.
4) Sets the DATA_FAULT bit in STATUS_CML.
5) Notifies the host through $\overline{\text{ALERT}}$ assertion (if enabled).

Host Sends or Reads Too Few Bytes

For each supported command, the device expects a fixed number of bytes to be written or read from the device. If for any reason fewer than the expected number of bytes is written to or read from the device, the device completely ignores the command and takes no action.

Host Sends Too Many Bytes or Bits

For each supported command, the device expects a fixed number of bytes to be written to the device. If for any reason more than the expected number of bytes or bits is written to the device, the device does the following:

1) Ignores the command.
2) Sets the CML bit in STATUS_BYTE.
3) Sets the CML bit in STATUS_WORD.
4) Sets the DATA_FAULT bit in STATUS_CML.
5) Notifies the host through $\overline{\text{ALERT}}$ assertion (if enabled).

Host Reads Too Many Bytes or Bits

For each supported command, the device expects a fixed number of bytes to be read from the device. If for any reason more than the expected number of bytes or bits is read from the device, the device does the following:

1) Sends all ones (FFh) as long as the host keeps acknowledging.
2) Sets the CML bit in STATUS_BYTE.
3) Sets the CML bit in STATUS_WORD.
4) Sets the DATA_FAULT bit in STATUS_CML.
5) Notifies the host through $\overline{\text{ALERT}}$ assertion (if enabled).

Host Sends Improperly Set Read Bit in the Slave Address Byte

If the device receives the R/$\overline{\text{W}}$ bit in the slave address set to one immediately preceding the command code, the device does the following (note this does not apply to ARA):

1) ACKs the address byte.
2) Sends all ones (FFh) as long as the host keeps acknowledging.
3) Sets the CML bit in STATUS_BYTE.
4) Sets the CML bit in STATUS_WORD.
5) Sets the DATA_FAULT bit in STATUS_CML.
6) Notifies the host through $\overline{\text{ALERT}}$ assertion (if enabled).

Unsupported Command Code Received

If the host sends the device a command code that it does not support, or if the host sends a command code that is not supported by the current PAGE setting, the device does the following:

1) Ignores the command.
2) Sets the CML bit in STATUS_BYTE.
3) Sets the CML bit in STATUS_WORD.
4) Sets the COMM_FAULT bit in STATUS_CML.
5) Notifies the host through $\overline{\text{ALERT}}$ assertion (if enabled).

Invalid Data Received

The device checks the PAGE, OPERATION, and WRITE_PROTECT command codes for valid data. If the host writes a data value that is invalid, the device does the following:

1) Ignores the command.
2) Sets the CML bit in STATUS_BYTE.
3) Sets the CML bit in STATUS_WORD.
4) Sets the DATA_FAULT bit in STATUS_CML.
5) Notifies the host through $\overline{\text{ALERT}}$ assertion (if enabled).

Host Reads from a Write-Only Command

When a read request is issued to a write-only command (CLEAR_FAULTS, STORE_DEFAULT_ALL, RESTORE_DEFAULT_ALL), the device does the following:

1) ACKs the address byte.
2) Ignores the command.
3) Sends all ones (FFh) as long as the host keeps acknowledging.
4) Sets the CML bit in STATUS_BYTE.
5) Sets the CML bit in STATUS_WORD.
6) Sets the DATA_FAULT bit in STATUS_CML.
7) Notifies the host through $\overline{\text{ALERT}}$ assertion (if enabled).

Host Writes to a Read-Only Command

When a write request is issued to a read-only command, the device does the following:

1) Ignores the command.
2) Sets the CML bit in STATUS_BYTE.
3) Sets the CML bit in STATUS_WORD.
4) Sets the COMM_FAULT bit in STATUS_CML.
5) Notifies the host through $\overline{\text{ALERT}}$ assertion (if enabled).

SMBus Timeout

If during an active SMBus communication sequence the SCL signal is held low for greater than the timeout duration (t_{TO}), the device terminates the sequence and resets the serial bus. It takes no other action. No status bits are set.

PMBus Operation

From a software perspective, the device appears as a PMBus device capable of executing a subset of PMBus commands. A PMBus 1.1-compliant device uses the SMBus version 1.1 for transport protocol and responds to the SMBus slave address. In this data sheet, the term SMBus is used to refer to the electrical characteristics of the PMBus communication using the SMBus physical layer. The term PMBus is used to refer to the PMBus command protocol. The device employs a number of standard SMBus protocols to program output voltage and warning/faults thresholds, read monitored data, and provide access to all manufacturer-specific commands.

The device supports the group command. The group command is used to send commands to more than one PMBus device. It is not required that all the devices receive the same command. However, no more than one command can be sent to any one device in one group command packet. The group command must not be used with commands that require receiving devices to respond with data, such as the STATUS_BYTE command. When the device receives a command through this protocol, it immediately begins execution of the received command after detecting the STOP condition.

The device supports the PAGE command and uses it to select which individual channel to access. When a data word is transmitted, the lower order byte is sent first and the higher order byte is sent last. Within any byte, the most significant bit (MSB) is sent first and the least significant bit (LSB) is sent last.

PMBus Protocol Support

The device supports a subset of the commands defined in the *PMBus™ Power System Management Protocol Specification Part II - Command Language, Revision 1.1*. For detailed specifications and the complete list of PMBus commands, refer to Part II of the PMBus specification available at www.PMBus.org. The supported PMBus commands and the corresponding device behavior are described in this document. All data values are represented in DIRECT format, unless otherwise stated. Whenever the PMBus specification refers to the PMBus device, it is referring to the MAX34440 operating in conjunction with a power supply. While the command can call for turning on or turning off the PMBus device, the MAX34440 always remains on to continue communicating with the PMBus master, and the MAX34440 transfers the command to the power supply accordingly.

Data Format

Voltage data for commanding or reading the output voltage or related parameters (such as the overvoltage threshold) is presented in DIRECT format. DIRECT format data is a 2-byte, two's complement binary value. DIRECT format data can be used with any command that sends or reads a parametric value. The DIRECT format uses an equation and defined coefficients to calculate the desired values. Table 3 shows the coefficients used by the device.

Interpreting Received DIRECT Format Values

The host system uses the following equation to convert the value received from the PMBus device—in this case, the MAX34440—into a reading of volts, degrees Celsius, or other units as appropriate:

$$X = (1/m) \times (Y \times 10^{-R} - b)$$

where X is the calculated, real world value in the appropriate units (V, °C, etc.); m is the slope coefficient; Y is the 2-byte, two's complement integer received from the PMBus device; b is the offset; and R is the exponent.

Table 3. PMBus Command Code Coefficients

PARAMETER	COMMANDS	UNITS	RESOLUTION	MAX	m	b	R
Voltage	VOUT_MARGIN_HIGH VOUT_MARGIN_LOW VOUT_OV_FAULT_LIMIT VOUT_OV_WARN_LIMIT VOUT_UV_WARN_LIMIT VOUT_UV_FAULT_LIMIT POWER_GOOD_ON POWER_GOOD_OFF READ_VOUT MFR_VOUT_PEAK MFR_VOUT_MIN	mV	1	32,767	1	0	0
Voltage Scaling	VOUT_SCALE_MONITOR	—	1/32,767	1	32,767	0	0
Current	IOUT_OC_WARN_LIMIT IOUT_OC_FAULT_LIMIT READ_IOUT MFR_IOUT_PEAK	mA	1	32,767	1	0	0
Current Scaling	IOUT_CAL_GAIN	mΩ	0.1	3276.7	1	0	1
Temperature	OT_FAULT_LIMIT OT_WARN_LIMIT READ_TEMPERATURE_1 MFR_TEMPERATURE_PEAK	°C	0.01	327.67	1	0	2
Timing	TON_DELAY TON_MAX_FAULT_LIMIT TOFF_DELAY MFR_FAULT_RETRY	ms	1	32,767	1	0	0

Sending a DIRECT Format Value

To send a value, the host must use the below equation to solve for Y:

$$Y = (mX + b) \times 10^{R}$$

where Y is the 2-byte, two's complement integer to be sent to the unit; m is the slope coefficient; X is the real world value, in units such as volts, to be converted for transmission; b is the offset; and R is the exponent.

The following example demonstrates how the host can send and retrieve values from the device. Table 4 shows the coefficients used in the following parameters.

Table 4. Coefficients for DIRECT Format Value

COMMAND CODE	COMMAND NAME	m	b	R
25h	VOUT_MARGIN_HIGH	1	0	0
8Bh	READ_VOUT	1	0	0

If a host wants to set the device to change the power-supply output voltage to 3.465V (or 3465mV), the corresponding VOUT_MARGIN_HIGH value is:

$$Y = (1 \times 3465 + 0) \times 10^{0} = 3465 \text{ (decimal)} = 0D89h \text{ (hex)}$$

Conversely, if the host received a value of 0D89h on a READ_VOUT command, this is equivalent to:

$$X = (1/1) \times (0D89h \times 10^{-(-0)} - 0) = 3465mV = 3.465V$$

Power supplies and power converters generally have no way of knowing how their outputs are connected to ground. Within the power supply, all output voltages are most commonly treated as positive. Accordingly, all output voltages and output voltage-related parameters of PMBus devices are commanded and reported as positive values. It is up to the system to know that a particular output is negative if that is of interest to the system. All output-voltage-related commands use 2 data bytes.

Fault Management and Reporting

For reporting faults/warnings to the host on a real-time basis, the device asserts the open-drain $\overline{\text{ALERT}}$ pin (if enabled in MFR_MODE) and sets the appropriate bit in the various status registers. On recognition of the $\overline{\text{ALERT}}$ assertion, the host or system manager is expected to poll the I^2C bus to determine the device asserting $\overline{\text{ALERT}}$. The host sends the SMBus ARA (0001 100). The device ACKs the SMBus ARA, transmits its slave address, and deasserts $\overline{\text{ALERT}}$. The system controller then communicates with PMBus commands to retrieve the fault/warning status information from the device.

See the individual command sections for more details. Faults and warnings that are latched in the status registers are cleared when any one of the following conditions occurs:

- A CLEAR_FAULTS command is received.
- The $\overline{\text{RST}}$ pin is toggled.
- Bias power to the device is removed and then reapplied.

One or more latched-off power supplies is only restarted when one of the following occurs:

- The output is commanded through the CONTROL pin, the OPERATION command, or the combined action of the CONTROL pin and OPERATION command to turn off and then turn back on.
- The $\overline{\text{RST}}$ pin is toggled.
- Bias power to the device is removed and then reapplied.

A power supply is not allowed to turn on if any faults the supply responds to are detected. Only after the faults clear is the power supply allowed to turn on. When global supplies are being sequenced on, a fault on any of the supplies keeps all supplies from being turned on.

A system-wide power-up (OPERATION command is received to turn the supplies on when PAGE is 255 or the CONTROL pin is toggled to turn on the supplies) allows all enabled power supplies to power-up. If any faults are detected once the supplies start to turn on, the response of MFR_FAULT_RESPONSE is performed.

The device responds to fault conditions according to the manufacturer fault response command (MFR_FAULT_RESPONSE). This command byte determines how the device should respond to each particular fault. Table 5 illustrates the required conditions and fault actions for specific parameters.

System Watchdog Timer

The device uses an internal watchdog timer that is internally reset every 5ms. In the event that the device is locked up and this watchdog reset does not occur after 500ms, the device automatically resets. After the reset occurs, the device reloads all configuration values that were stored to flash and begins normal operation. After the reset, the device also does the following:

1) Sets the NONE OF THE ABOVE bit in STATUS_BYTE.
2) Sets the NONE OF THE ABOVE and MFR bits in STATUS_WORD.
3) Sets the WATCHDOG bit in STATUS_MFR_SPECIFIC.
4) Notifies the host through $\overline{\text{ALERT}}$ assertion (if enabled in MFR_MODE).

Table 5. Device Parametric Monitoring States

PARAMETER	REQUIRED CONDITIONS FOR ACTIVE MONITORING	ACTION DURING A FAULT
Overvoltage	Power Supply Enabled (TON_MAX_FAULT_LIMIT ≠ 0000h)	Continue Monitoring
Undervoltage	• Power Supply Enabled (TON_MAX_FAULT_LIMIT ≠ 0000h) • PSEN Output is Active • Channel's VOUT Must Have Exceeded VOUT_UV_FAULT During Channel Power-Up	Stop Monitoring While the Power Supply is Off
Overcurrent	• Power Supply Enabled (TON_MAX_FAULT_LIMIT ≠ 0000h) • Current Monitoring Enabled (IOUT_OC_FAULT_LIMIT ≠ 0000h)	Continue Monitoring
Power-Up Time	Power Supply Enabled (TON_MAX_FAULT_LIMIT ≠ 0000h)	Monitor Only During Power-On
Overtemperature	Temp Sensor Enabled (ENABLE in MFR_TEMP_SENSOR_CONFIG = 1)	Continue Monitoring

Temperature Sensor Operation

The device can monitor up to eight different temperature sensors, seven external sensors plus its own internal temperature sensor. The external temperature sensors are all connected in parallel to the master I2C port (MSDA and MSCL pins). The device can support up to four DS75LV devices plus one MAX6695 device. Each of the enabled temperature sensors is measured once a second. The internal temperature sensor is averaged four times to reduce the affect of noise. Each time the device attempts to read a temperature sensor it checks for faults. For the remote diode, a fault is defined as either an open or short across the diode. For the internal temperature sensor, a fault is defined as reading greater than +130°C or less than -60°C. For the I2C temperature sensors, a fault is defined as a communication access failure. Temperature sensor faults are reported by setting the temperature reading to 7FFFh. A temperature sensor fault results in the setting of the TEMPERATURE bit in STATUS_BYTE and STATUS_WORD and $\overline{\text{ALERT}}$ is asserted (if enabled in MFR_MODE). No bits are set in STATUS_MFR_SPECIFIC. Reading disabled temperature sensors returns a fixed value of 0000h.

The device can control up to four DS75LV digital temperature sensors. The A0, A1, and A2 pins on the DS75LV should be configured as shown in Table 6. The thermostat function on the DS75LV is not used and thus the O.S. output should be left open circuit.

The device can control one MAX6695, which consists of one local temperature sensor and two remote diode temperature sensors. Each of the temperature sensors can be reinitialized by disabling and re-enabling the sensor through MFR_TEMP_SENSOR_CONFIG. The valid range for the MAX6695 temperature sensor is -40°C to +125°C. The page assignment is shown in Table 6. The $\overline{\text{ALERT}}$, $\overline{\text{OT1}}$, and $\overline{\text{OT2}}$ pins on the MAX6695 are not used and should be left open circuit.

Table 6. DS75LV Address Pin Configurations

PAGE	MAX34440 I2C TEMP SENSOR	DS75LV ADDRESS PIN CONFIGURATION		
		A2	A1	A0
6	MAX34440 Internal	—	—	—
7	DS75LV (Address 0)	0	0	0
8	DS75LV (Address 1)	0	0	1
9	DS75LV (Address 2)	0	1	0
10	DS75LV (Address 3)	0	1	1
11	MAX6695 (Local Sensor)	—	—	—
12	MAX6695 (Remote Diode 1)	—	—	—
13	MAX6695 (Remote Diode 2)	—	—	—

PMBus Commands

A summary of the PMBus commands supported by the device are described in the following sections.

PAGE (00h)

The device can control up to six power supplies and up to eight temperature sensors using one PMBus (I^2C) address. Send the PAGE command with data 0 to 13 to select which power supply or which temperature sensor is affected by all the PMBus commands shown in Table 1. Not all commands are supported within each page. If an unsupported command is received, the CML status bit is set. Some commands are common, meaning that any selected page has the same effect on and the same response from the device.

Table 7. Page Commands

PAGE (DEC)	ASSOCIATED CONTROL
0	Power Supply Connected to ADC 0
1	Power Supply Connected to ADC 1
2	Power Supply Connected to ADC 2
3	Power Supply Connected to ADC 3
4	Power Supply Connected to ADC 4
5	Power Supply Connected to ADC 5
6	Internal Temperature Sensor
7	External DS75LV Temperature Sensor with Address 0
8	External DS75LV Temperature Sensor with Address 1
9	External DS75LV Temperature Sensor with Address 2
10	External DS75LV Temperature Sensor with Address 3
11	External MAX6695 Local Temperature Sensor
12	External MAX6695 Remote Diode 1 Temperature Sensor
13	External MAX6695 Remote Diode 2 Temperature Sensor
14 to 254	Reserved
255	Applies to All Pages

OPERATION (01h)

The OPERATION command is used to turn the power supply on and off in conjunction with the CONTROL input pin. The OPERATION command is also used to cause the power supply to set the output voltage to the upper or lower margin voltages. The power supply stays in the commanded operating mode until a subsequent OPERATION command or until a change in the state of the CONTROL pin (if enabled) instructs the power supply to change to another state. The valid OPERATION command byte values are shown in Tables 8 and 9. The OPERATION command controls how the device responds when commanded to change the output. When the command byte is 00h, the device immediately turns the power supply off and ignores any programmed turn-off delay. When the command byte is set to 40h, the device powers down according to the programmed turn-off delay. In Tables 8 and 9, "act on any fault" means that if any warning or fault on the selected power supply is detected when the output is margined, the device treats this as a warning or fault and responds as programmed. "Ignore all faults" means that overvoltage, overcurrent, and undervoltage warnings and faults on the selected power supply are ignored and not reported. Any command value not shown in Tables 8 and 9 is an invalid command. If the device receives a data byte that is not listed in Tables 8 and 9, then it treats this as invalid data, declares a data fault (set CML bit and assert $\overline{\text{ALERT}}$), and responds as described in the *Fault Management and Reporting* section.

USER NOTE: All power supplies tagged as GLOBAL supplies (see MFR_FAULT_RESPONSE) should be turned on and off at the same time.

Table 8. OPERATION Command Byte (When Bit 3 of ON_OFF_CONFIG = 1)

COMMAND BYTE	POWER SUPPLY ON OR OFF	MARGIN STATE
00h	Immediate Off (No Sequencing)	N/A
40h	Soft Off (with Sequencing)	N/A
80h	On	Margin Off
94h	On	Margin Low (Ignore All Faults)
98h	On	Margin Low (Act On Any Fault)
A4h	On	Margin High (Ignore All Faults)
A8h	On	Margin High (Act On Any Fault)

Note: *The VOUT of all enabled channels must exceed POWER_GOOD_ON for margining to begin.*

Table 9. OPERATION Command Byte (When Bit 3 of ON_OFF_CONFIG = 0)

COMMAND BYTE	POWER SUPPLY ON OR OFF	MARGIN STATE
00h	Command Has No Effect	N/A
40h	Command Has No Effect	N/A
80h	Command Has No Effect	Margin Off
94h	Command Has No Effect	Margin Low (Ignore All Faults)
98h	Command Has No Effect	Margin Low (Act On Any Fault)
A4h	Command Has No Effect	Margin High (Ignore All Faults)
A8h	Command Has No Effect	Margin High (Act On Any Fault)

Note: *The device only takes action if the supply is enabled. The VOUT of all enabled channels must exceed POWER_GOOD_ON for margining to begin.*

ON_OFF_CONFIG (02h)

The ON_OFF_CONFIG command configures the combination of CONTROL input and PMBus OPERATION commands needed to turn the power supply on and off. This indicates how the power supply is commanded when power is applied. Table 10 describes the ON_OFF_CONFIG message content. The host should not modify ON_OFF_CONFIG while the power supplies are active.

Table 10. ON_OFF_CONFIG (02h) Command Byte

BIT	PURPOSE	BIT VALUE	MEANING
7:5	Reserved	N/A	Always returns 000.
4	Turn on supplies when bias is present or use the CONTROL pin and/or OPERATION command	0	Turn on the supplies (with sequencing, if so configured) as soon as bias is supplied to the device regardless of the CONTROL pin.
		1	Operate the supplies as instructed by the CONTROL pin and/or the OPERATION command.
3	OPERATION Command Enable	0	Ignore the on/off portion of the OPERATION command.
		1	OPERATION command enabled and required for action.
2	CONTROL Pin Enable	0	Ignore the CONTROL pin.
		1	CONTROL pin enabled and required for action.
1	CONTROL Pin Polarity	0	Active low (drive low to turn on the power supplies).
		1	Active high (drive high to turn on the power supplies).
0	CONTROL Pin Turn-Off Action	0	Use the programmed turn-off delay (soft off).
		1	Turn off the power supplies immediately.

CLEAR_FAULTS (03h)

The CLEAR_FAULTS command is used to clear any fault or warning bits in the status registers that have been set. This command clears all bits simultaneously. The CLEAR_FAULTS command does not cause a power supply that has latched off for a fault condition to restart. The status of PSEN under fault conditions is not affected by this command and changes only if commanded through the OPERATION command or CONTROL pin. If a fault is still present after the CLEAR_FAULTS command is executed, the fault status bit is set again and the host is also notified by asserting $\overline{\text{ALERT}}$ (if enabled in MFR_MODE). This command is write-only. There is no data byte for this command.

WRITE_PROTECT (10h)

The WRITE_PROTECT command is used to provide protection against accidental changes to the device operating memory. All supported commands can have their parameters read, regardless of the WRITE_PROTECT settings. The WRITE_PROTECT message content is described in Table 11.

Table 11. WRITE_PROTECT Command Byte

COMMAND BYTE	MEANING
80h	Disable all writes except the WRITE_PROTECT command.
40h	Disable all writes except the WRITE_PROTECT, OPERATION, and PAGE commands.
20h	Disable all writes except the WRITE_PROTECT, OPERATION, PAGE, and ON_OFF_CONFIG commands.
00h	Enable writes for all commands (default).

Note: *No fault or error is generated if the host attempts to write to a protected area.*

STORE_DEFAULT_ALL (11h)

The STORE_DEFAULT_ALL command instructs the device to transfer the device configuration information to the internal flash memory array. Not all information is stored. Only configuration data is stored, not any status, or operational data. If an error occurs during the transfer, $\overline{\text{ALERT}}$ asserts if enabled and the CML bit in STATUS_BYTE and STATUS_WORD is set to 1. No bits are set in STATUS_CML. **It is NOT recommended to use the STORE_DEFAULT_ALL command while the device is operating power supplies.** The device is unresponsive to PMBus commands and does not monitor power supplies while transferring the configuration. This command is write-only. There is no data byte for this command.

USER NOTE: V_{DD} must be above 2.9V for the device to perform the STORE_DEFAULT_ALL command.

RESTORE_DEFAULT_ALL (12h)

The RESTORE_DEFAULT_ALL command transfers the default configuration information from the internal flash memory array to the user memory registers in the device. The RESTORE_DEFAULT_ALL command should only be executed when the device is not operating the power supplies. Upon a device reset, this command is automatically executed by the device without PMBus action required. This command is write-only. There is no data byte for this command.

CAPABILITY (19h)

The CAPABILITY command is used to determine some key capabilities of the device. The CAPABILITY command is read-only. The message content is described in the Table 12.

Table 12. CAPABILITY Command Byte

BIT	DESCRIPTION	MEANING
7	Packet-Error Checking	0 = PEC not supported.
6:5	PMBus Speed	00 = Maximum supported bus speed is 100kHz.
4	ALERT	1 = Device supports an ALERT output (if ALERT is enabled in MFR_MODE). 0 = Device does not support ALERT output (ALERT is disabled in MFR_MODE).
3:0	Reserved	Always returns 0000.

VOUT_MODE (20h)

The VOUT_MODE command is used to report the data format of the device. The device uses the DIRECT format for all the voltage-related commands. The value returned is 40h, indicating DIRECT data format. This command is read-only. If a host attempts to write this command, the CML status bit is asserted. See Table 3 for the m, b, and R values for the various commands.

VOUT_MARGIN_HIGH (25h)

The VOUT_MARGIN_HIGH command loads the device with the voltage to which the power-supply output is to be changed when the OPERATION command is set to margin high. If the power supply is already operating at margin high, changing VOUT_MARGIN_HIGH has no effect on the output voltage. The device only adjusts the power supply to the new VOUT_MARGIN_HIGH voltage after receiving a new margin high OPERATION command. The 2 data bytes are in DIRECT format. If the device cannot successfully close-loop margin the power supply, the device keeps attempting to margin the supply and does the following:

1) Sets the NONE OF THE ABOVE bit in STATUS_BYTE.
2) Sets the NONE OF THE ABOVE and MFR bits in STATUS_WORD.
3) Sets the MARGIN_FAULT bit in STATUS_MFR_SPECIFIC.
4) Notifies the host through $\overline{\text{ALERT}}$ assertion (if enabled in MFR_MODE).

VOUT_MARGIN_LOW (26h)

The VOUT_MARGIN_LOW command loads the device with the voltage to which the power-supply output is to be changed when the OPERATION command is set to margin low. If the power supply is already operating at margin low, changing VOUT_MARGIN_LOW has no effect on the output voltage. The device only adjusts the power supply to the new VOUT_MARGIN_LOW voltage after receiving a new margin low OPERATION command. The 2 data bytes are in DIRECT format. If the device cannot successfully close-loop margin the power supply, the device keeps attempting to margin the supply and does the following:

1) Sets the NONE OF THE ABOVE bit in STATUS_BYTE.
2) Sets the NONE OF THE ABOVE and MFR bits in STATUS_WORD.
3) Sets the MARGIN_FAULT bit in STATUS_MFR_SPECIFIC.
4) Notifies the host through $\overline{\text{ALERT}}$ assertion (if enabled in MFR_MODE).

VOUT_SCALE_MONITOR (2Ah)

VOUT_SCALE_MONITOR is used in applications where the measured power-supply voltage is not equal to the voltage at the ADC input. For example, if the ADC input expects a 1.0V input for a 12V output, VOUT_SCALE_MONITOR = 1.0V/12V = 0.0833. In applications where the power-supply output voltage is greater than the device input range, the output voltage of the power supply is sensed through a resistive voltage-divider. The resistive voltage-divider reduces or scales the output voltage. The PMBus commands specify the actual power-supply output voltages and not the input voltage to the ADC. To allow the device to map between the power-supply voltage (such as 12V) and the voltage at the ADC input, the VOUT_SCALE_MONITOR command is used. The 2 data bytes are in DIRECT format. This value is dimensionless. For example, if the required scaling factor is 0.0833, then VOUT_SCALE_MONITOR should be set to 0AABh (2731/32,767 = 0.0833).

Table 13. VOUT_SCALE_MONITOR

NOMINAL VOLTAGE LEVEL MONITORED (V)	NOMINAL ADC INPUT VOLTAGE LEVEL (V) (SEE NOTE)	RESISTIVE VOLTAGE-DIVIDER RATIO	VOUT_SCALE_MONITOR VALUE (HEX)
1.2	1.0	0.833	6AAAh
1.5	1.0	0.667	5555h
1.8	1.0	0.555	470Ah
2.5	1.0	0.4	3333h
3.3	1.0	0.303	26C8h
5	1.0	0.2	1999h
12	1.0	0.0833	0AABh

Note: *On the device, the full-scale ADC voltage is 1.225V. A scaling factor where a 1.0V ADC input represents a nominal 100% voltage level is recommended.*

IOUT_CAL_GAIN (38h)

The IOUT_CAL_GAIN command is used to set the ratio of the voltage at the ADC input to the sensed current. The units of the IOUT_CAL_GAIN factor are 0.1mΩ. The 2 data bytes are in DIRECT format. For example, if a 10mΩ sense resistor is used with a 50V/V current-sense amplifier, the IOUT_CAL_GAIN should be set to 500mΩ or 1388h.

USER NOTE: On the device, the full-scale ADC voltage is 1.225V. The value of the sense resistor and current-sense amplifier gain must be scaled appropriately.

VOUT_OV_FAULT_LIMIT (40h)

The VOUT_OV_FAULT_LIMIT command sets the value of the output voltage that causes an output overvoltage fault. The 2 data bytes are in DIRECT format. In response to the VOUT_OV_FAULT_LIMIT being exceeded, the device does the following:

1) Sets the VOUT_OV bit in STATUS_BYTE.
2) Sets the VOUT_OV and VOUT bits in STATUS_WORD.
3) Sets the VOUT_OV_FAULT bit in STATUS_VOUT.
4) Responds as specified in the MFR_FAULT_RESPONSE.
5) Notifies the host through $\overline{\text{ALERT}}$ assertion (if enabled in MFR_MODE).

VOUT_OV_WARN_LIMIT (42h)

The VOUT_OV_WARN_LIMIT command sets the value of the output voltage that causes an output-voltage high warning. This value is typically less than the output overvoltage threshold in VOUT_OV_FAULT_LIMIT. The 2 data bytes are in DIRECT format. In response to the VOUT_OV_WARN_LIMIT being exceeded, the device does the following:

1) Sets the NONE OF THE ABOVE bit in STATUS_BYTE.
2) Sets the NONE OF THE ABOVE and VOUT bits in STATUS_WORD.
3) Sets the VOUT_OV_WARN bit in STATUS_VOUT.
4) Notifies the host using $\overline{\text{ALERT}}$ assertion (if enabled in MFR_MODE).

VOUT_UV_WARN_LIMIT (43h)

The VOUT_UV_WARN_LIMIT command sets the value of the output voltage that causes an output-voltage low warning. This value is typically greater than the output undervoltage fault threshold in VOUT_UV_FAULT_LIMIT. This warning is masked until the output voltage reaches the programmed VOUT_UV_FAULT for the first time and also during turn-off when the power supply is disabled. The 2 data bytes are in DIRECT format. In response to violation of the VOUT_UV_WARN_LIMIT, the device does the following:

1) Sets the NONE OF THE ABOVE bit in STATUS_BYTE.
2) Sets the NONE OF THE ABOVE and VOUT bits in STATUS_WORD.
3) Sets the VOUT_UV_WARN bit in STATUS_VOUT.
4) Notifies the host using $\overline{\text{ALERT}}$ assertion (if enabled in MFR_MODE).

VOUT_UV_FAULT_LIMIT (44h)

The VOUT_UV_FAULT_LIMIT command sets the value of the output voltage that causes an output undervoltage fault. This fault is masked until the output voltage reaches the programmed VOUT_UV_FAULT for the first time and also during turn-off when the power supply is disabled. The VOUT_UV_FAULT_LIMIT threshold is also used to determine if TON_MAX_FAULT_LIMIT is exceeded. The 2 data bytes are in DIRECT format. In response to violation of the VOUT_UV_FAULT_LIMIT, the device does the following:

1) Sets the NONE OF THE ABOVE bit in STATUS_BYTE.
2) Sets the NONE OF THE ABOVE and VOUT bits in STATUS_WORD.
3) Sets the VOUT_UV_FAULT bit in STATUS_VOUT.
4) Responds as specified in MFR_FAULT_RESPONSE.
5) Notifies the host using $\overline{\text{ALERT}}$ assertion (if enabled in MFR_MODE).

IOUT_OC_WARN_LIMIT (46h)

The IOUT_OC_WARN_LIMIT command sets the value of the current that causes an overcurrent warning. This value is typically less than the overcurrent fault threshold in IOUT_OC_FAULT_LIMIT. The 2 data bytes are in DIRECT format. In response to violation of the IOUT_OC_WARN_LIMIT, the device does the following:

1) Sets the NONE OF THE ABOVE bit in STATUS_BYTE.
2) Sets the NONE OF THE ABOVE, IOUT, and MFR bits in STATUS_WORD.
3) Sets the OC_WARN bit in STATUS_MFR_SPECIFIC.
4) Notifies the host using $\overline{\text{ALERT}}$ assertion (if enabled in MFR_MODE).

IOUT_OC_FAULT_LIMIT (4Ah)

The IOUT_OC_FAULT_LIMIT command sets the value of the current that causes an overcurrent fault. The factory default value for IOUT_OC_FAULT_LIMIT is 0000h. This value disables the device from measuring current. Any nonzero positive value written to IOUT_OC_FAULT_LIMIT causes the device to enable current measurement. The 2 data bytes are in DIRECT format. In response to violation of the IOUT_OC_FAULT_LIMIT, the device does the following:

1) Sets the IOUT_OC bit in STATUS_BYTE.
2) Sets the IOUT, IOUT_OC, and MFR bits in STATUS_WORD.
3) Sets the OC_FAULT bit in STATUS_MFR_SPECIFIC.
4) Responds as specified in the MFR_FAULT_RESPONSE.
5) Notifies the host using $\overline{\text{ALERT}}$ assertion (if enabled in MFR_MODE).

Table 14. IOUT_OC_FAULT_LIMIT

IOUT_OC_FAULT_LIMIT VALUE	DEVICE RESPONSE (ON THE ASSOCIATED PAGE)
8000h to FFFFh	Negative values are invalid.
0000h	Current measurement disabled.
0001h to 7FFFh	Current measurement enabled.

OT_FAULT_LIMIT (4Fh)

The OT_FAULT_LIMIT command sets the temperature, in degrees Celsius, of the selected temperature sensor at which an overtemperature fault is detected. The 2 data bytes are in DIRECT format. In response to the OT_FAULT_LIMIT being exceeded, the device does the following:

1) Sets the TEMPERATURE bit in STATUS_BYTE.
2) Sets the TEMPERATURE and MFR bits in STATUS_WORD.
3) Sets the OT_FAULT bit in STATUS_MFR_SPECIFIC.
4) Responds as specified in MFR_FAULT_RESPONSE.
5) Notifies the host using $\overline{\text{ALERT}}$ assertion (if enabled in MFR_MODE).

OT_WARN_LIMIT (51h)

The OT_WARN_LIMIT command sets the temperature, in degrees Celsius, of the selected temperature sensor at which an overtemperature warning is detected. The 2 data bytes are in DIRECT format. In response to the OT_WARN_LIMIT being exceeded, the device does the following:

1) Sets the TEMPERATURE bit in STATUS_BYTE.
2) Sets the TEMPERATURE and MFR bits in STATUS_WORD.
3) Sets the OT_WARN bit in STATUS_MFR_SPECIFIC.
4) Notifies the host through $\overline{\text{ALERT}}$ assertion (if enabled in MFR_MODE).

POWER_GOOD_ON (5Eh)

The POWER_GOOD_ON command sets the value of the output voltage that causes the PG output to assert. All enabled power supplies must be above their associated POWER_GOOD_ON thresholds before the PG output is asserted. All the enabled power supplies must also be above POWER_GOOD_ON for power-supply margining to begin. The POWER_GOOD_ON level is normally set higher than the POWER_GOOD_OFF level and VOUT_UV_FAULT_LIMIT. The 2 data bytes are in DIRECT format.

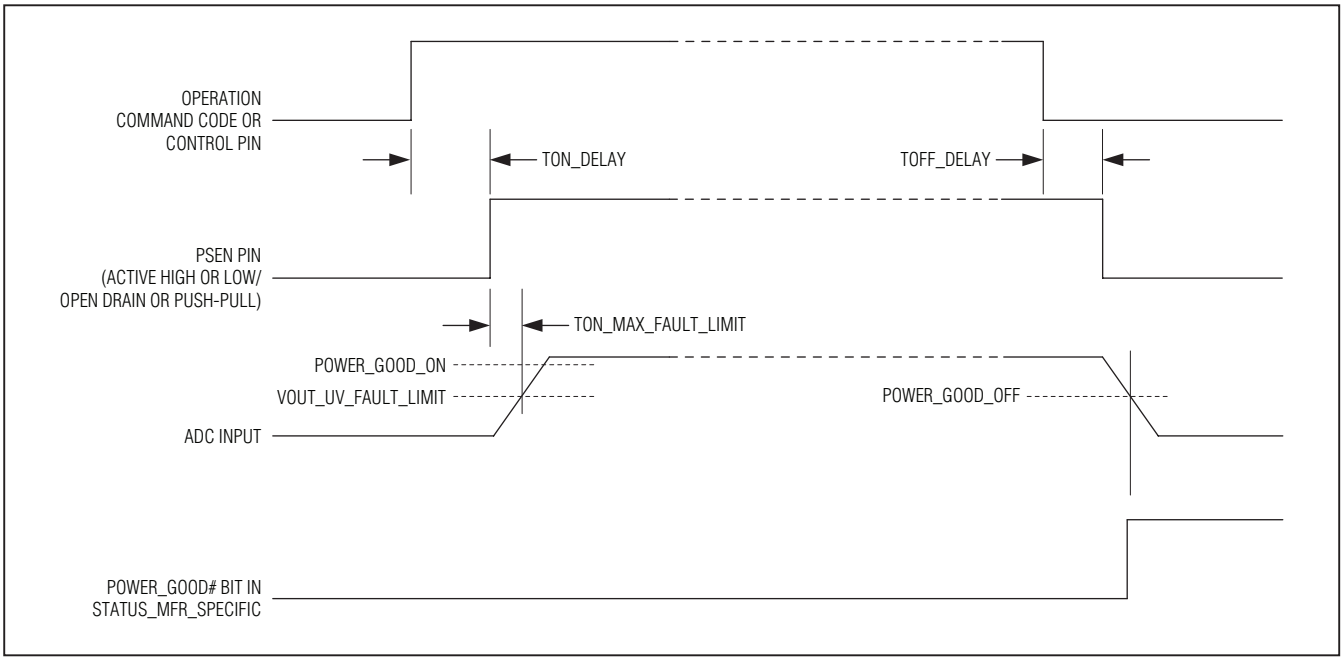

Figure 1. Power-Supply Sequencing

POWER_GOOD_OFF (5Fh)

The POWER_GOOD_OFF command sets the value of the output voltage that causes the PG output to deassert after it has been asserted. Any enabled power supply that falls below the associated POWER_GOOD_OFF threshold causes the PG output to be deasserted. The POWER_GOOD_OFF level is normally set lower than the POWER_GOOD_ON level. The 2 data bytes are in DIRECT format.

When the VOUT level of a power supply falls from greater than POWER_GOOD_ON to less than POWER_GOOD_OFF, the device does the following:

1) Sets the NONE OF THE ABOVE bit in STATUS_BYTE.
2) Sets the NONE OF THE ABOVE, POWER_GOOD#, and STATUS_MFR_SPECIFIC bits in STATUS_WORD.
3) Sets the POWER_GOOD# bit in STATUS_MFR_SPECIFIC.

TON_DELAY (60h)

TON_DELAY sets the time, in milliseconds, from when a START condition is received (a valid OPERATION command or through the CONTROL pin when enabled) until the PSEN output is asserted. The undervoltage fault and warning are masked off during TON_DELAY. The 2 data bytes are in DIRECT format.

TON_MAX_FAULT_LIMIT (62h)

The TON_MAX_FAULT_LIMIT sets an upper time limit, in milliseconds, from when the TON_DELAY and the PSEN output are asserted until the output voltage crosses the VOUT_UV_FAULT_LIMIT threshold. The 2 data bytes are in DIRECT format. If the value is 0, the power supply is not sequenced by the device and the associated PSEN output remains deasserted; voltage and current monitoring is disabled. In response to the TON_MAX_FAULT_LIMIT being exceeded, the device does the following:

1) Sets the NONE OF THE ABOVE bit in STATUS_BYTE.
2) Sets the NONE OF THE ABOVE and VOUT bits in STATUS_WORD.
3) Sets the TON_MAX_FAULT bit in STATUS_VOUT.
4) Responds as specified in the MFR_FAULT_RESPONSE.
5) Notifies the host using $\overline{\text{ALERT}}$ assertion (if enabled in MFR_MODE).

Table 15. TON_MAX_FAULT_LIMIT

TON_MAX_FAULT_LIMIT VALUE	DEVICE RESPONSE (FOR THE ASSOCIATED PAGE)
8000h to FFFFh	Negative values are invalid.
0000h	Channel off (PSEN remains deasserted with no monitoring).
0001h to 7FFFh	Channel on and sequencing enabled.

Note: *TON_MAX_FAULT_LIMIT should be set higher than 5ms.*

TOFF_DELAY (64h)

The TOFF_DELAY sets the time, in milliseconds, from when a STOP condition is received (a soft-off OPERATION command or through the CONTROL pin when enabled) until the PSEN output is deasserted. When commanded to turn off immediately (either through the OPERATION command or the CONTROL pin), the TOFF_DELAY value is ignored. The 2 data bytes are in DIRECT format.

STATUS_BYTE (78h)

The STATUS_BYTE command returns 1 byte of information with a summary of the most critical faults. A value of 1 indicates that a fault or warning event has occurred and a 0 indicates otherwise. Bits for unsupported features are reported as 0. The STATUS_BYTE cannot be restored by the RESTORE_DEFAULT_ALL command. The STATUS_BYTE message content is described in Table 16. This command is read-only.

Table 16. STATUS_BYTE

BIT	BIT NAME	MEANING
7:6	0	These bits always return a 0.
5	VOUT_OV	An overvoltage fault has occurred.
4	IOUT_OC	An overcurrent fault has occurred.
3	0	This bit always returns a 0.
2	TEMPERATURE	A temperature fault or warning has occurred.
1	CML	A communication, memory, or logic fault has occurred.
0	NONE OF THE ABOVE	A fault or warning not listed in bits [7:1] has occurred.

STATUS_WORD (79h)

The STATUS_WORD command returns 2 bytes of information with a summary of the reason for a fault. The low byte of the STATUS_WORD is the same data as the STATUS_BYTE. Table 17 describes the STATUS_WORD message content.

Table 17. STATUS_WORD

BIT	BIT NAME	MEANING
15	VOUT	An output voltage fault or warning or TON_MAX_FAULT has occurred.
14	IOUT	An overcurrent fault or warning has occurred.
13	0	This bit always returns a 0.
12	MFR	A bit in STATUS_MFR_SPECIFIC has been set.
11	POWER_GOOD#	A power-supply voltage has fallen from POWER_GOOD_ON to less than POWER_GOOD_OFF.
10:6	0	These bits always return a 0.
5	VOUT_OV	An overvoltage fault has occurred.
4	IOUT_OC	An overcurrent fault has occurred.
3	0	This bit always returns a 0.
2	TEMPERATURE	A temperature fault or warning has occurred.
1	CML	A communication, memory, or logic fault has occurred.
0	NONE OF THE ABOVE	A fault or warning not listed in bits [7:1] has occurred.

STATUS_VOUT (7Ah)

The STATUS_VOUT command returns 1 byte of information with contents as described in Table 18.

Table 18. STATUS_VOUT

BIT	BIT NAME	MEANING
7	VOUT_OV_FAULT	VOUT overvoltage fault.
6	VOUT_OV_WARN	VOUT overvoltage warning.
5	VOUT_UV_WARN	VOUT undervoltage warning.
4	VOUT_UV_FAULT	VOUT undervoltage fault.
3	0	This bit always returns a 0.
2	TON_MAX_FAULT	TON maximum fault.
1:0	0	These bits always return a 0.

STATUS_CML (7Eh)

The STATUS_CML command returns 1 byte of information with contents as described in Table 19.

Table 19. STATUS_CML

BIT	BIT NAME	MEANING
7	COMM_FAULT	An invalid or unsupported command has been received.
6	DATA_FAULT	An invalid or unsupported data has been received.
5:1	0	These bits always return a 0.
0	FAULT_LOG_FULL	MFR_NV_FAULT_LOG is full and needs to be cleared.

STATUS_MFR_SPECIFIC (80h)

The STATUS_MFR_SPECIFIC command returns 1 byte of information with a summary of the reason for a fault. The STATUS_MFR_SPECIFIC message content is described in Table 20.

Table 20. STATUS_MFR_SPECIFIC

BIT	BIT NAME	MEANING
7	OFF	This bit is set if the power supply is off (due to either a fault or sequencing delay; this bit is not set if the power supply is disabled).
6	OT_WARN	Overtemperature warning.
5	OT_FAULT	Overtemperature fault.
4	WATCHDOG	A watchdog reset has occurred.
3	MARGIN_FAULT	This bit is set if the device cannot properly close-loop margin the power supply.
2	POWER_GOOD#	Power-supply voltage has fallen from POWER_GOOD_ON to less than POWER_GOOD_OFF.
1	OC_FAULT	IOUT overcurrent fault.
0	OC_WARN	IOUT overcurrent warning.

Note: *The settings of the OFF and POWER_GOOD# bits do not assert the $\overline{ALERT}$ signal.*

READ_VOUT (8Bh)

The READ_VOUT command returns the actual measured (not commanded) output voltage. READ_VOUT is measured and updated every 5ms. The 2 data bytes are in DIRECT format.

READ_IOUT (8Ch)

The READ_IOUT command returns the latest measured current value. READ_IOUT is measured and updated every 200ms. The 2 data bytes are in DIRECT format.

READ_TEMPERATURE_1 (8Dh)

The READ_TEMPERATURE_1 command returns the temperature returned from the temperature sensor. READ_TEMPERATURE_1 returns 7FFFh if the sensor is faulty and 0000h if the sensor is disabled. READ_TEMPERATURE_1 is measured and updated once a second. The 2 data bytes are in DIRECT format.

PMBUS_REVISION (98h)

The PMBUS_REVISION command returns the revision of the PMBus specification to which the device is compliant. The command has 1 data byte. Bits [7:4] indicate the revision of PMBus specification Part I to which the device is compliant. Bits [3:0] indicate the revision of PMBus specification Part II to which the device is compliant. This command is read-only. The PMBUS_REVISION value returned is always 11h, which indicates that it is compliant with Part I Rev 1.1 and Part II Rev 1.1.

MFR_ID (99h)

The MFR_ID command returns the text (ISO/IEC 8859-1) character of the manufacturer's (Maxim) identification. The default MFR_ID value is 4Dh (M). This command is read-only.

MFR_MODEL (9Ah)

The MFR_MODEL command returns the text (ISO/IEC 8859-1) character of the device model number. The default MFR_MODEL value is 51h (Q). This command is read-only.

MFR_REVISION (9Bh)

The MFR_REVISION command returns two text (ISO/IEC 8859-1) characters that contain the device revision numbers for hardware (upper byte) and firmware (lower byte). The default MFR_REVISION value is 3030h (00). This command is read-only.

MFR_LOCATION (9Ch)

The MFR_LOCATION command loads the device with text (ISO/IEC 8859-1) characters that identify the facility that manufactures the power supply. The maximum number of characters is 8. This data is written to internal flash using the STORE_DEFAULT_ALL command. The factory default text string value is 10101010.

MFR_DATE (9Dh)

The MFR_DATE command loads the device with text (ISO/IEC 8859-1) characters that identify the date of manufacture of the power supply. The maximum number of characters is 8. This data is written to internal flash using the STORE_DEFAULT_ALL command. The factory default text string value is 10101010.

MFR_SERIAL (9Eh)

The MFR_SERIAL command loads the device with text (ISO/IEC 8859-1) characters that uniquely identify the device. The maximum number of characters is 8. This data is written to internal flash using the STORE_DEFAULT_ALL command. The factory default text string value is 10101010.

MFR_MODE (D1h)

The MFR_MODE command is used to configure the device to support manufacturer specific commands. The MFR_MODE command is described in Table 21.

Table 21. MFR_MODE

BIT	BIT NAME	MEANING		
15	FORCE_NV_FAULT_LOG	Setting this bit to 1 forces the device to log data into the nonvolatile fault log. Once set, the device clears this bit when the action is completed. The host must set again for subsequent action. If an error occurs during this action, the device sets the CML bit in STATUS_BYTE and STATUS_WORD; no bits are set in STATUS_CML.		
14	CLEAR_NV_FAULT_LOG	Setting this bit to 1 forces the device to clear the nonvolatile fault log by writing FFh to all byte locations. Once set, the device clears this bit when the action is completed. The host must set again for subsequent action. If an error occurs during this action, the device sets the CML bit in STATUS_BYTE and STATUS_WORD; no bits are set in STATUS_CML.		
13	ALERT	0 = $\overline{\text{ALERT}}$ disabled (device does not respond to ARA). 1 = $\overline{\text{ALERT}}$ enabled (device responds to ARA and ARA must be used).		
12	0	This bit always returns a 0.		
11	SOFT_RESET	This bit must be set, then cleared and set again within 8ms for a soft reset to occur.		
10:9	PGTIME[1:0]	**PGTIME1**	**PGTIME0**	**TIME FROM POWER GOOD DETERMINED UNTIL PG OUTPUT IS ASSERTED (ms)**
		0	0	Immediately
		0	1	100
		1	0	500
		1	1	1000
8	0	This bit always returns a 0.		
7	PSEN_PP_OD	Applies to all PSEN outputs. 0 = PSEN push-pull output. 1 = PSEN open-drain output.		
6	PSEN_HI_LO	Applies to all PSEN outputs. 0 = PSEN active low. 1 = PSEN active high.		
5:0	0	These bits always return a 0.		

Note: *V_{DD} must be above 2.9V for the device to clear or log data into MFR_NV_FAULT_LOG. MFR_MODE should not be changed while power supplies are being sequenced.*

MFR_VOUT_PEAK (D4h)

The MFR_VOUT_PEAK command returns the maximum actual measured output voltage. To reset this value to 0, write to this command with a data value of 0. Any values written to this command are used as a comparison for future peak updates. The 2 data bytes are in DIRECT format.

MFR_IOUT_PEAK (D5h)

The MFR_IOUT_PEAK command returns the maximum measured current. To reset this value to 0, write to this command with a data value of 0. Any values written to this command are used as a comparison for future peak updates. The 2 data bytes are in DIRECT format.

MFR_TEMPERATURE_PEAK (D6h)

The MFR_TEMPERATURE_PEAK command returns the maximum measured temperature. To reset this value to its lowest value, write to this command with a data value of 8000h. Any other values written by this command are used as a comparison for future peak updates. The 2 data bytes are in DIRECT format.

MFR_VOUT_MIN (D7h)

The MFR_VOUT_MIN command returns the minimum actual measured output voltage. To reset this value, write to this command with a data value of 7FFFh. Any values written to this command are used as a comparison for future minimum updates. The 2 data bytes are in DIRECT format.

MFR_FAULT_RESPONSE (D9h)

The MFR_FAULT_RESPONSE command specifies the response to each fault condition supported by the device. In response to a fault, the device always reports the fault in the appropriate status register and asserts the $\overline{\text{ALERT}}$ output (if enabled in MFR_MODE). A CML fault cannot cause any device action other than setting the status bit and asserting the $\overline{\text{ALERT}}$ output. The MFR_FAULT_RESPONSE command is described in Table 22.

Table 22. MFR_FAULT_RESPONSE

BIT	BIT NAME	MEANING
15	NV_LOG	0 = Do not log the fault into MFR_NV_FAULT_LOG. 1 = Log the fault into MFR_NV_FAULT_LOG.
14	GLOBAL	0 = Affect only the selected page power supply. 1 = Affect all supplies with GLOBAL = 1.
13	UV_OV_FILTER	0 = Fault on first voltage sample excursion occurrence. 1 = Requires two consecutive voltage sample excursions before a fault is declared and action is taken.
12:10	0	These bits always return a 0.
9:8	IOUT_OC_FAULT_LIMIT_RESPONSE[1:0]	See Table 23.
7:6	OT_FAULT_LIMIT_RESPONSE[1:0]	See Table 23 (see Notes 1 and 2).
5:4	TON_MAX_FAULT_LIMIT_RESPONSE[1:0]	See Table 23.
3:2	VOUT_UV_FAULT_LIMIT_RESPONSE[1:0]	See Table 23.
1:0	VOUT_OV_FAULT_LIMIT_RESPONSE[1:0]	See Table 23.

Note 1: All enabled temperature sensor faults are logically ORed together.

Note 2: Temperature faults affect all enabled power supplies. Supplies that are designated as global all respond in the same manner. This response is the worst-case response of the global channels for the given fault. Supplies that are not global respond to a temperature fault based upon the programmed response for the particular supply.

Note 3: The fault response for a power-supply fault is determined by MFR_FAULT_RESPONSE for the faulting channel. If this channel is part of a global group, this fault response is performed for all the global channels.

Table 23. MFR_FAULT_RESPONSE Codes

RESPONSE SETTING [1:0]	FAULT RESPONSE
11	• Set the corresponding fault bit in the appropriate status register. • Log fault into MFR_NV_FAULT_LOG if NV_LOG = 1. • Continue power-supply operation.
10	• Set the corresponding fault bit in the appropriate status register. • Log fault into MFR_NV_FAULT_LOG if NV_LOG = 1. • If GLOBAL = 1, assert the $\overline{\text{FAULT}}$ output until faults on all GLOBAL supplies clear and MFR_FAULT_RETRY expires. • Shut down the power supply by deasserting the PSEN output. Wait for the time configured in MFR_FAULT_RETRY and restart the supply. If GLOBAL = 1, all enabled power supplies with GLOBAL = 1 are shut down in sequence as configured with TOFF_DELAY, or they are all shut down immediately as configured by bit 0 in ON_OFF_CONFIG. Wait for the time configured in MFR_FAULT_RETRY and restart supplies in sequence as configured with TON_DELAY.
01	• Set the corresponding fault bit in the appropriate status register. • Log fault into MFR_NV_FAULT_LOG if NV_LOG = 1. • If GLOBAL = 1, assert the $\overline{\text{FAULT}}$ output until power supplies are restarted by the user. • Latch-off the power supply by deasserting the PSEN output. If GLOBAL = 1, all enabled power supplies with GLOBAL = 1 are either shut down in sequence as configured with TOFF_DELAY, or they are all shut down immediately as configured by bit 0 in ON_OFF_CONFIG.
00	• Set the corresponding fault bit in the appropriate status register. • Continue power-supply operation.

Note: *$\overline{\text{ALERT}}$ is asserted if enabled when a new status bit is set. A status bit is latched the first time a particular fault or warning occurs.*

MFR_FAULT_RETRY (DAh)

The MFR_FAULT_RETRY command sets the delay time between a power supply being shut down by a fault response and the power supply restarting. This command sets the retry time delay in multiples of 1ms. This command value is used for all fault responses that require delay retry. If global supplies are being sequenced off, the retry delay time does not begin until the last global channel is turned off. The 2 data bytes are in DIRECT format. When MFR_FAULT_RETRY = 0000h, the device restarts the power supply at the next available time period.

MFR_NV_FAULT_LOG (DCh)

Each time the MFR_NV_FAULT_LOG command is executed, the device returns a block of 255 bytes containing one of the 15 nonvolatile fault logs. The MFR_NV_FAULT_LOG command must be executed 15 times to dump the complete nonvolatile fault log. If the returned fault log is all FFs, this indicates that this fault log has not been written by the device. As the device is operating, it is reading the latest operating conditions for voltage, current, and temperature, and it is updating the status registers. All this information is stored in on-board RAM. When a fault is detected (if so enabled in MFR_FAULT_RESPONSE), the device automatically logs this information to one of the 15 nonvolatile fault logs. After 15 faults have been written, bit 0 of STATUS_CML is set and the host must clear the fault log by setting the CLEAR_NV_FAULT_LOG bit in MFR_MODE before any additional faults are logged. All the latest status information is logged as well as eight readings of voltage from the last 800ms in 100ms increments and four readings of current from the last 800ms of operation. If a power supply is not enabled to measure either current or voltage or if a temperature sensor is disabled, the associated fault log position returns 0000h.

There is a FAULT_LOG_COUNT (16-bit counter) at the beginning of each fault log that indicates which fault log is the latest. This counter rolls over should more than 65,535 faults be logged. This counter is not cleared when the CLEAR_NV_FAULT_LOG bit in MFR_MODE is toggled. The 255 bytes returned by the MFR_NV_FAULT_LOG command are described in Table 24.

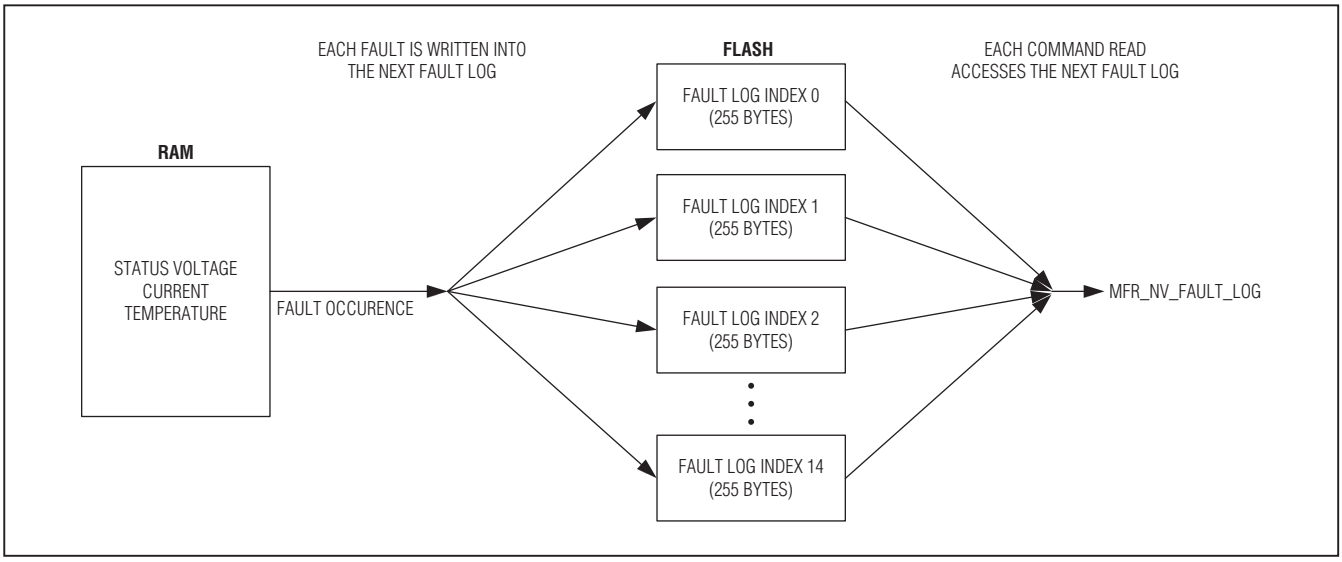

Figure 2. MFR_NV_FAULT_LOG

If an error occurs while the device is attempting to write or clear the NV_FAULT_LOG, the device sets the CML bit in STATUS_BYTE and STATUS_WORD; no bits are set in STATUS_CML. $\overline{\text{ALERT}}$ is asserted (if enabled in MFR_MODE). See Figure 2.

USER NOTE: V_{DD} must be above 2.9V for the device to clear or log data into MFR_NV_FAULT_LOG.

Table 24. MFR_NV_FAULT_LOG

BYTE	PARAMETER	BYTE	PARAMETER
0	00h/FAULT_LOG_INDEX	128	READ_VOUT Index = 3, Page 2
2	FAULT_LOG_COUNT	130	READ_VOUT Index = 3, Page 3
4	MFR_TIME_COUNT (LSW)	132	READ_VOUT Index = 3, Page 4
6	MFR_TIME_COUNT (MSW)	134	READ_VOUT Index = 3, Page 5
8	STATUS_BYTE/STATUS_CML	136	READ_VOUT Index = 4, Page 0
10	STATUS_WORD	138	READ_VOUT Index = 4, Page 1
12	STATUS_VOUT Pages 0/1	140	READ_VOUT Index = 4, Page 2
14	STATUS_VOUT Pages 2/3	142	READ_VOUT Index = 4, Page 3
16	STATUS_VOUT Pages 4/5	144	READ_VOUT Index = 4, Page 4
18	STATUS_MFR_SPECIFIC Pages 0/1	146	READ_VOUT Index = 4, Page 5
20	STATUS_MFR_SPECIFIC Pages 2/3	148	READ_VOUT Index = 5, Page 0
22	STATUS_MFR_SPECIFIC Pages 4/5	150	READ_VOUT Index = 5, Page 1
24	STATUS_MFR_SPECIFIC Pages 6/7	152	READ_VOUT Index = 5, Page 2
26	STATUS_MFR_SPECIFIC Pages 8/9	154	READ_VOUT Index = 5, Page 3
28	STATUS_MFR_SPECIFIC Pages 10/11	156	READ_VOUT Index = 5, Page 4
30	STATUS_MFR_SPECIFIC Pages 12/13	158	READ_VOUT Index = 5, Page 5
32	MFR_VOUT_PEAK Page 0	160	READ_VOUT Index = 6, Page 0
34	MFR_VOUT_PEAK Page 1	162	READ_VOUT Index = 6, Page 1
36	MFR_VOUT_PEAK Page 2	164	READ_VOUT Index = 6, Page 2
38	MFR_VOUT_PEAK Page 3	166	READ_VOUT Index = 6, Page 3
40	MFR_VOUT_PEAK Page 4	168	READ_VOUT Index = 6, Page 4

Table 24. MFR_NV_FAULT_LOG (continued)

BYTE	PARAMETER	BYTE	PARAMETER
42	MFR_VOUT_PEAK Page 5	170	READ_VOUT Index = 6, Page 5
44	MFR_IOUT_PEAK Page 0	172	READ_VOUT Index = 7, Page 0
46	MFR_IOUT_PEAK Page 1	174	READ_VOUT Index = 7, Page 1
48	MFR_IOUT_PEAK Page 2	176	READ_VOUT Index = 7, Page 2
50	MFR_IOUT_PEAK Page 3	178	READ_VOUT Index = 7, Page 3
52	MFR_IOUT_PEAK Page 4	180	READ_VOUT Index = 7, Page 4
54	MFR_IOUT_PEAK Page 5	182	READ_VOUT Index = 7, Page 5
56	MFR_TEMPERATURE_PEAK Page 6	184	RESERVED (0000h)
58	MFR_TEMPERATURE_PEAK Page 7	186	CURRENT_INDEX/00h
60	MFR_TEMPERATURE_PEAK Page 8	188	READ_IOUT Index = 0, Page 0
62	MFR_TEMPERATURE_PEAK Page 9	190	READ_IOUT Index = 0, Page 1
64	MFR_TEMPERATURE_PEAK Page 10	192	READ_IOUT Index = 0, Page 2
66	MFR_TEMPERATURE_PEAK Page 11	194	READ_IOUT Index = 0, Page 3
68	MFR_TEMPERATURE_PEAK Page 12	196	READ_IOUT Index = 0, Page 4
70	MFR_TEMPERATURE_PEAK Page 13	198	READ_IOUT Index = 0, Page 5
72	MFR_VOUT_MIN Page 0	200	READ_IOUT Index = 1, Page 0
74	MFR_VOUT_MIN Page 1	202	READ_IOUT Index = 1, Page 1
76	MFR_VOUT_MIN Page 2	204	READ_IOUT Index = 1, Page 2
78	MFR_VOUT_MIN Page 3	206	READ_IOUT Index = 1, Page 3
80	MFR_VOUT_MIN Page 4	208	READ_IOUT Index = 1, Page 4
82	MFR_VOUT_MIN Page 5	210	READ_IOUT Index = 1, Page 5
84	RESERVED (0000h)	212	READ_IOUT Index = 2, Page 0
86	VOLTAGE_INDEX/00h	214	READ_IOUT Index = 2, Page 1
88	READ_VOUT Index = 0, Page 0	216	READ_IOUT Index = 2, Page 2
90	READ_VOUT Index = 0, Page 1	218	READ_IOUT Index = 2, Page 3
92	READ_VOUT Index = 0, Page 2	220	READ_IOUT Index = 2, Page 4
94	READ_VOUT Index = 0, Page 3	222	READ_IOUT Index = 2, Page 5
96	READ_VOUT Index = 0, Page 4	224	READ_IOUT Index = 3, Page 0
98	READ_VOUT Index = 0, Page 5	226	READ_IOUT Index = 3, Page 1
100	READ_VOUT Index = 1, Page 0	228	READ_IOUT Index = 3, Page 2
102	READ_VOUT Index = 1, Page 1	230	READ_IOUT Index = 3, Page 3
104	READ_VOUT Index = 1, Page 2	232	READ_IOUT Index = 3, Page 4
106	READ_VOUT Index = 1, Page 3	234	READ_IOUT Index = 3, Page 5
108	READ_VOUT Index = 1, Page 4	236	RESERVED (0000h)
110	READ_VOUT Index = 1, Page 5	238	READ_TEMPERATURE_1 Page 6
112	READ_VOUT Index = 2, Page 0	240	READ_TEMPERATURE_1 Page 7
114	READ_VOUT Index = 2, Page 1	242	READ_TEMPERATURE_1 Page 8
116	READ_VOUT Index = 2, Page 2	244	READ_TEMPERATURE_1 Page 9
118	READ_VOUT Index = 2, Page 3	246	READ_TEMPERATURE_1 Page 10
120	READ_VOUT Index = 2, Page 4	248	READ_TEMPERATURE_1 Page 11
122	READ_VOUT Index = 2, Page 5	250	READ_TEMPERATURE_1 Page 12
124	READ_VOUT Index = 3, Page 0	252	READ_TEMPERATURE_1 Page 13
126	READ_VOUT Index = 3, Page 1	254	LOG_VALID (see note)

Note: *LOG_VALID is set to DDh if the fault log contains valid data.*

MFR_TIME_COUNT (DDh)

The MFR_TIME_COUNT command returns the number of seconds the device has been operating since the last time power was applied to the device, $\overline{RST}$ was toggled, or a soft reset occurred. The counter is a 32-bit value and cannot be reset by the user.

MFR_MARGIN_CONFIG (E0h)

The MFR_MARGIN_CONFIG command configures the digital PWM outputs to margin the power supplies. The MFR_MARGIN_CONFIG command is described in Table 25.

Power-supply margining is implemented using the PWM outputs. The PWM frequency is 62.5kHz. The device close-loop controls the duty cycle to margin the power supply. The device provides 6 bits of duty-cycle resolution.

The device margins the power supplies when OPERATION is set to one of the margin states. Margining of the supplies does not begin until **all** enabled power supplies have exceeded their programmed POWER_GOOD_ON levels. When this happens, the PWM output is enabled and the seed value from MFR_MARGIN_CONFIG is loaded as the initial PWM duty cycle. The device then averages eight samples of VOUT for a total time of 40ms. If the measured VOUT and the target (set by either VOUT_MARGIN_HIGH or VOUT_MARGIN_LOW) differ by more than 1%, the PWM duty cycle is adjusted by one step. The direction of the duty cycle adjustment is determined by the SLOPE bit in MFR_MARGIN_CONFIG. All changes to the PWM are made after averaging eight samples of VOUT over a 40ms period.

The device is unable to successfully margin a power supply to the programmed target when the PWM duty cycle reaches 0% or 100% and the target voltage has not been achieved. If this occurs, the device continues attempting to margin the power supply and does the following:

1) Sets the NONE OF THE ABOVE bit in STATUS_BYTE.
2) Sets the NONE OF THE ABOVE and MFR bits in STATUS_WORD.
3) Sets the MARGIN_FAULT bit in STATUS_MFR_SPECIFIC.
4) Notifies the host through $\overline{ALERT}$ assertion (if enabled in MFR_MODE).

Also, the averaged VOUT after the PWM has initially been enabled with the seed value is compared to the target value. If the programmed seed value causes VOUT to exceed the target, a MARGIN_FAULT is declared. For example, if the target is VOUT_MARGIN_LOW and VOUT is less than VOUT_MARGIN_LOW after seeding, MARGIN_FAULT is set. In response to this fault, the device continues margining the power supply and does the following:

1) Sets the NONE OF THE ABOVE bit in STATUS_BYTE.
2) Sets the NONE OF THE ABOVE and MFR bits in STATUS_WORD.
3) Sets the MARGIN_FAULT bit in STATUS_MFR_SPECIFIC.
4) Notifies the host through $\overline{ALERT}$ assertion (if enabled in MFR_MODE).

Table 25. MFR_MARGIN_CONFIG

BIT	BIT NAME	MEANING
15	SLOPE	PWM duty cycle to resulting voltage relationship. 0 = Negative slope (increasing duty cycle results in a lower voltage). 1 = Positive slope (increasing duty cycle results in a higher voltage).
14:6	0	These bits always return a 0.
5:0	SEED	This 6-bit value is used as the initial PWM duty cycle (i.e., seed value) when the device begins to margin a power supply either up or down.

MFR_TEMP_SENSOR_CONFIG (F0h)

The MFR_TEMP_SENSOR_CONFIG command is used to configure the temperature sensors. Table 26 describes the MFR_TEMP_SENSOR_CONFIG command.

Table 26. MFR_TEMP_SENSOR_CONFIG

BIT	BIT NAME	MEANING
15	ENABLE	Clearing and setting this bit reinitializes the temperature sensor. 0 = Temperature sensor disabled. 1 = Temperature sensor enabled.
14:0	0	These bits always return a 0.

Applications Information

Power-Supply Decoupling

To achieve the best results when using the device, decouple the V_{DD} power supply with a 0.1µF capacitor. Use a high-quality, ceramic, surface-mount capacitor if possible. Surface-mount components minimize lead inductance, which improves performance, and ceramic capacitors tend to have adequate high-frequency response for decoupling applications.

Decouple the REG25 and REG18 regulator outputs using 1µF and 10nF capacitors (one each per output).

Do not connect other circuitry to either of these pins.

Open-Drain Pins

MSDA, MSCL, SCL, SDA, $\overline{FAULT}$, and $\overline{ALERT}$ are open-drain pins and require external pullup resistors connected to V_{DD} to realize high logic levels.

PSEN0 to PSEN5 can be user-configured as either CMOS push-pull or open-drain outputs. When configured as open-drain, external pullup resistors connected to V_{DD} are required to realize high logic levels (see the MFR_MODE settings).

PMBus 6-Channel Power-Supply Manager

Typical Operating Circuit

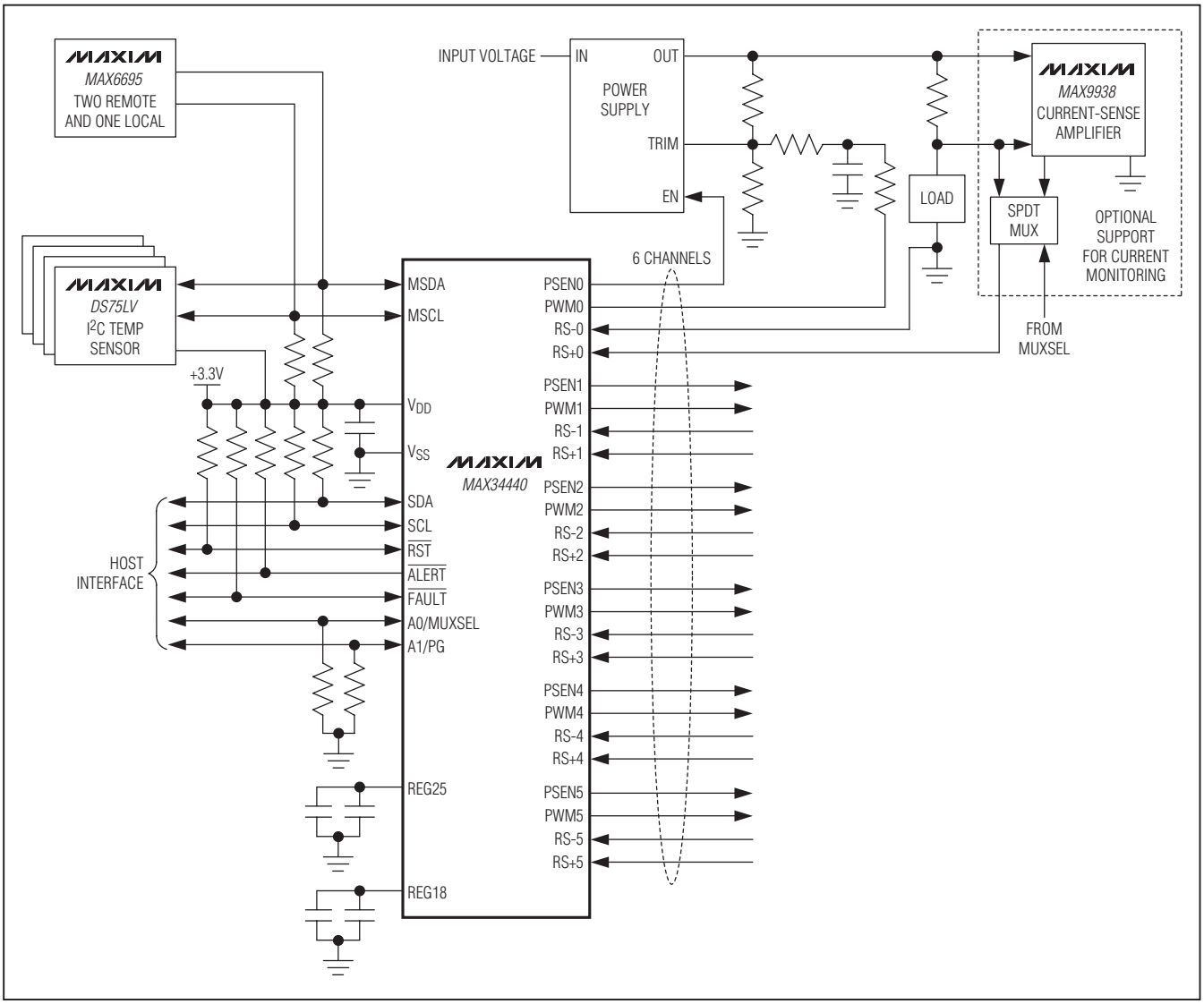

Package Information

For the latest package outline information and land patterns, go to **www.maxim-ic.com/packages.** Note that a "+", "#", or "-" in the package code indicates RoHS status only. Package drawings may show a different suffix character, but the drawing pertains to the package regardless of RoHS status.

PACKAGE TYPE	PACKAGE CODE	OUTLINE NO.	LAND PATTERN NO.
40 TQFN-EP	T4066+2	21-0141	90-0053

Revision History

REVISION NUMBER	REVISION DATE	DESCRIPTION	PAGES CHANGED
0	9/10	Initial release	—

Maxim cannot assume responsibility for use of any circuitry other than circuitry entirely embodied in a Maxim product. No circuit patent licenses are implied. Maxim reserves the right to change the circuitry and specifications without notice at any time.

© 2010 Maxim Integrated Products Maxim is a registered trademark of Maxim Integrated Products, Inc.