MLX90132

13.56MHz RFID / NFC Transceiver

Features and Benefits

- Conforms with ISO/IEC 18092 (NFC)
- Conforms with ISO/IEC 14443A and B,
- Conforms with ISO/IEC 15693
- Conforms with ISO/IEC 18000-3 mode 1
- High speed communication (up to 848kbit/s)
- Standard SPI/UART interfaces
- Built-in Field and TAG detectors

Application Examples

- NFC enabled car for access and start
- Combo NFC and Wireless Power Charging solutions
- NFC applications in Industrial area (e.g. White goods, security …)

Ordering Information

Part Code	Temperature Code	Package Code	Option Code	Packing Form Code
MLX90132	R (-40°C to 105°C)	LQ (Lead free QFN 5x5 32 leads)	AEA-000	RE
MLX90132	R (-40°C to 105°C)	LQ (Lead free QFN 5x5 32 leads)	AEA-000	TU
MLX90132	S (-20°C to 85°C)	LQ (Lead free QFN 5x5 32 leads)	AEA-000	RE
MLX90132	S (-20°C to 85°C)	LQ (Lead free QFN 5x5 32 leads)	AEA-000	TU

Functional Diagram

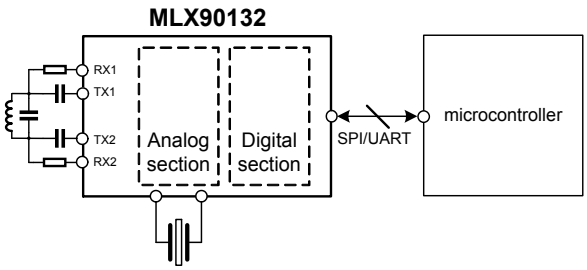

Figure 1: MLX90132 functional diagram

Description

The MLX90132 is a 13.56MHz, fully integrated, multi-protocol RFID/NFC transceiver IC. It has been designed to handle sub-carrier frequencies from 106 to 848 kHz and baud rates up to 848kbit/s.

The dual driver architecture of the MLX90132 requires minimal external support components and allows the transmitter to provide up to 300milliwatts RF power to an appropriate antenna load. This delivered power is suitable for most short to mid-range applications.

The MLX90132 embeds tag emulation functionality to support NFC Peer to Peer passive communication mode. Enhanced tag and field detection capabilities provide significant power consumption reduction in RFID reader configuration and in NFC mode.

The digital section of the MLX90132 handles the low protocol layers from API to physical layer using advanced bit and frame encoding/decoding functions. It contains a digital demodulator based on sub-carrier detection and a programmable bit/symbol encoder/decoder. It also encodes and decodes the start and stop bits, parity bits, extra guard time (EGT), start and end of frame (SOF/EOF) and CRC.

Its 528 byte buffer handles an entire RFID frame. The SPI/UART communication ports guarantee easy interface with the majority of microcontrollers.

Table of Contents

1 Pin and signal descriptions 3
2 General Description 4
3 Power Management and Operating modes 6
4 Start-up sequence 8
5 Communication Interface & protocol 9
5.1 UART 9
5.2 SPI 10
5.2.1 Polling mode 10
5.2.2 IRQ mode 11
6 Commands 12
6.1 Command format 12
6.2 List of commands 12
6.3 IDN command (0x01) 13
6.4 Protocol select command (0x02) 13
6.5 PollField command (0x03) 18
6.6 SendRecv command (0x04) 19
6.6.1 Support of extended frames 21
6.6.2 List of Error codes 22
6.7 Listen command (0x05) 23
6.8 Send command (0x06) 25
6.9 Idle command (0x07) 26
6.10 BaudRate command (0x0A) 28
6.11 SubFreqRes command (0x0B) 28
6.12 AcFilter command (0x0D) 29
7 Modifying internal settings for optimal performances 30
7.1.1 Example: How to modify the ARC_B register 30
7.1.2 Example how to read back WUFlags content 31
8 Tag Detector 32
8.1 Operating Principle 32
8.2 Calibration procedure 33
9 Field Detector 33
10 Electromagnetic support (EMD) 34
11 Application Information 37
11.1 External Antenna network 37
11.2 Application schematic 37
12 Electrical Specifications 38
12.1 Absolute Maximum Ratings 38
12.2 DC Characteristics 38
12.3 Power Consumption Characteristics 38
12.4 RF Characteristics 39
12.5 SPI Characteristics 40
12.6 Oscillator Characteristics 41
14 ESD Precautions 42
15 Standard information regarding manufacturability of Melexis products with different soldering processes 42
16 Package Information 43
17 Disclaimer 44
18 Contact Information 44

1 Pin and signal descriptions

The device is packaged in a 32 pin lead free QFN package.

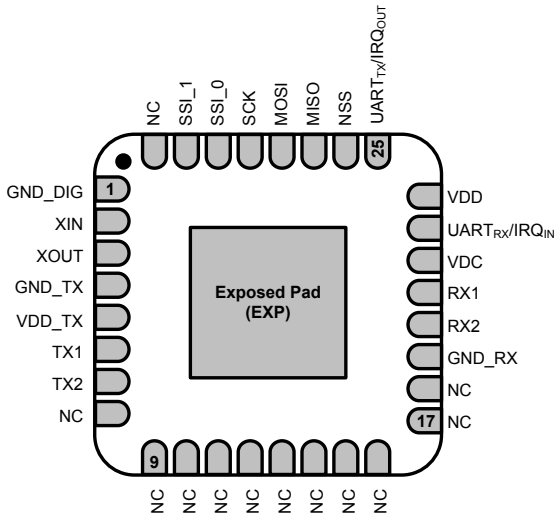

Pin	Symbol	Pin Type	Description
1	GND_dig	Supply	Ground (Digital)
2	XIN	Analog	Xtal oscillator input
3	XOUT	Analog	Xtal oscillator output
4	GND_TX	Supply	Ground (Drivers)
5	VDD_TX	Supply	Drivers Power Supply
6	TX1	Analog	Driver output_1
7	TX2	Analog	Driver output_2
19	GND_RX	Supply	Ground (analog)
20	RX2	Analog	Receiver input_2
21	RX1	Analog	Receiver input_1
22	VDC	Analog	Melexis Reserved
23	UART_RX / IRQ_in	Digital I	UART Receive pin/Interrupt input
24	VDD	Supply	Main Power Supply
25	UART_TX / IRQ_out	Digital O	UART Transmit pin/Interrupt output
26	NSS	Digital I	SPI Slave Select
27	MISO	Digital O	SPI data output
28	MOSI	Digital I	SPI data input
29	SCK	Digital I	SPI clock
30	SSI_0	Digital I	Select serial communication interface
31	SSI_1	Digital I	Must be set to GND
8-18, 32	NC		Not connected
EXP		Exposed Pad	Must be set to GND

Table 1: Pin definitions and descriptions

2 General Description

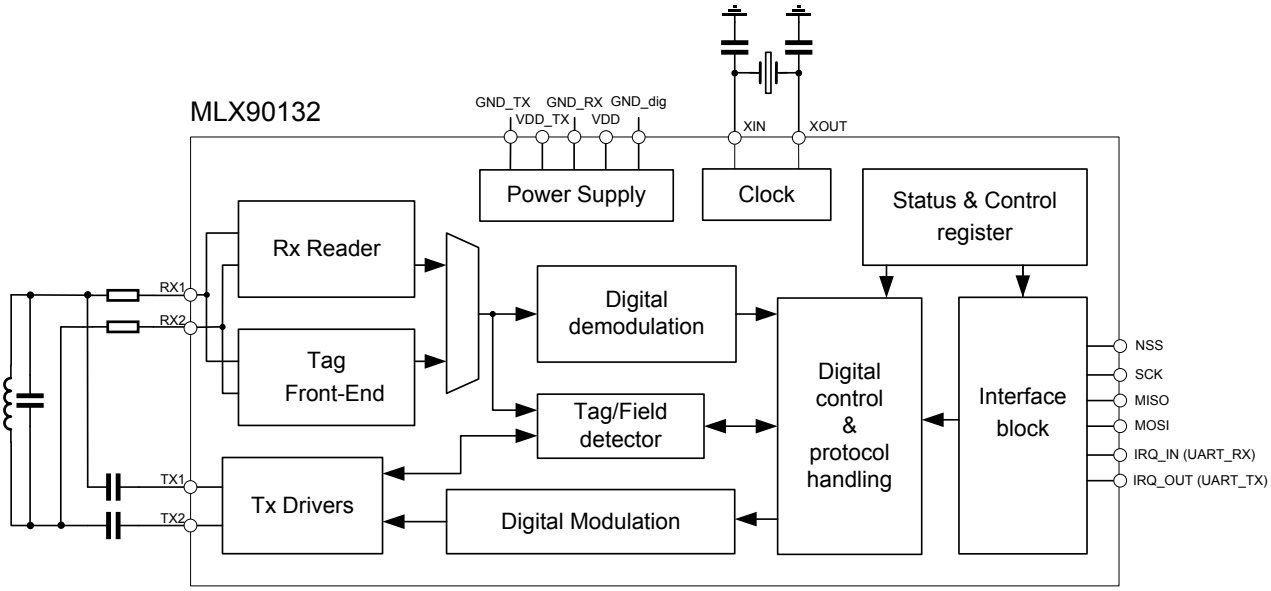

Figure 2: MLX90132 simplified block diagram

Power Supply

The MLX90132 is supplied with the 2 pins V_{DD} (supply of the digital and analog blocks) and V_{DD_TX} (direct supply of the TX Drivers), each requiring a nominal stable external power supply from 2.7 to 5.5 volt. Both pins V_{DD} and V_{DD_TX} are independent and could be connected together to the same power supply level or to different ones. The current drain depends on the antenna impedance and on the output matching network configuration.

Special attention should be paid to the filtering of V_{DD_TX}. Typically, a ferrite and a decoupling capacitor will be added close to the MLX90132 device.

TX Drivers

The transmission stage of the MLX90132 is composed of two differential outputs T_{X1} and T_{X2}, providing square waves with a frequency of f_{HFO} (typ. 13.56MHz), an amplitude of V_{DD_TX} and with a phase shift of 180 degrees. Each output is featuring an equivalent serial resistance R_{ON} which has to be taken into account when calculating the antenna matching network.

The transmission stage of the MLX90132 could be modulated using Amplitude Shift Keying (ASK) with a modulation index between 10% and 100%. The modulation index is automatically set with the selection of the protocol of communication, using the command Protocol select command (0x02). The modulation index could be fine adjusted by following the procedure described in the section Modifying internal settings for optimal performances.

In TAG emulation mode, the two outputs TX1 and TX2 are internally connected together, insuring a proper parallel resonance of the antenna. In this configuration, the two serial capacitors CS are put in parallel to the parallel capacitor CP. This operation is done automatically when selecting TAG emulation modes and should also be taken into account when defining an EMI filter for EMC considerations.

RX Reader

The reception stage of the MLX90132 is used in Reader mode to receive information from a transponder or an NFC/RFID device. This stage performs the analog demodulation using two internal diode detectors on RX1 and RX2.The information is then filtered with the appropriate bandwidth and finally digitized for further processing. The receiver inputs RX1 and RX2 are typically connected to the resonance point of the antenna, through two external attenuation resistors or capacitors to avoid saturation of the internal detector set to V_{RXMAX}. The complete receiver stage is automatically configured according to the protocol in use (Protocol select command (0x02)).

Tag Front-end

This block is enabled in Tag emulation mode and performs all operations related to Tag emulation functionality with low power consumption. The modulated information coming from an NFC/RFID device is demodulated through the two built-in detectors connected on RX1 and RX2, filtered with the appropriate bandwidth and finally digitized for further processing. The full settings of the Tag front-end stage are automatically set with the selected protocol using the Protocol select command (0x02). The load modulation used to send back the information in TAG emulation mode is also performed by the Tag front-end block. In this case, an internal resistor is connected between the two inputs RX1 and RX2, modifying the antenna load.

Digital control & protocol handling

This block is responsible for the control of the device, as well as the frame coding and decoding parts of the protocols supported by the MLX90132. The MLX90132 exchanges with the application microcontroller, pure payload information after adding/removing frame related information such as SOF, EOF, EGT … It can also be configured to calculate the CRC for each communication protocol.

Interface Block

The MLX90132 is addressed through SPI or UART (Reader mode only) interfaces with a specific and simple set of commands. The built-in 528 byte buffer allows minimum interaction with the application microcontroller. This reduces the burden of the microcontroller whose resources can be fully dedicated for the application.

Tag/Field Detector

This block manages the enhanced Tag and Field detection capabilities. It generates a detection signal that is available for the application microcontroller through the interrupt pin IRQ_OUT. It allows the use of the MLX90132 with low power consumption constraints.

Reference clock and internal oscillator

The built-in reference oscillator works with a reference crystal f_{XTAL} of 27.12MHz from which the internal nominal system clock frequency $\mathbf{f_{HFO}}$ of **13.56 MHz** is derived. An internal low frequency RC oscillator frequency $\mathbf{f_{LFO}}$ of **32 kHz** is used for low-power operating modes, for example to control the internal timings.

In TAG emulation mode the clock is recovered from the HF field, through the built-in Clock Recovery block. In case of field loss (e.g. during Reader modulation), an internal backup clock of ~10MHz is used instead.

Power management

The MLX90132 features 2 modes of operation (Active and Idle), subdivided in 6 different states of operation:

- **Hibernate**, the device typically consumes 1µA
- **Sleep**, the device typically consumes 20µA
- **TAG detection**, the device typically consumes 45µA.
- **TAG emulation**, the device typically consumes 2.5mA.
- **Ready** (RF field OFF), the device typically consumes 2.5mA.
- **Reader**, the consumption depends on the antenna load and on the operating conditions

3 Power Management and Operating modes

The MLX90132 features 2 main operating modes: Idle and Active, with 6 different states of operation, as described on the table below:

Mode	State	Description
Idle	Hibernate	Lowest power consumption, the MLX90132 wakes-up with low level pulse on IRQ_IN pin
	Sleep	Low Power consumption: Wake-up source to exit from this mode is configurable: - Timer - IRQ_in pin (low-level) - NSS pin (low-level) - Field detector
	Tag detection	Low power consumption: Tag detection feature, wake up source is configurable - Timer - IRQ_in pin (low level) - NSS pin (low level) - Tag detector (mandatory)
Active	Ready	High frequency oscillator (HFO) is running. In this mode the MLX90132 is in reader mode with its HF field turned OFF. The MLX90132 waits for a command from the external application, through the selected serial interface SPI or UART
	Reader	High frequency oscillator (HFO) is running. In this mode the MLX90132 is selected in reader mode with its HF field set ON. The MLX90132 is able to receive and execute commands through the selected serial interface SPI or UART and is able to communicate with transponders and NFC devices, according to the selected protocol. In Reader mode, the command “SendRecv” is used to send and receive information from an NFC/RFID transponder or devices
	TAG Emulation	High frequency oscillator (HFO) is running. In this mode the MLX90132 is selected in Tag emulation mode with its HF field set OFF. The MLX90132 is able to receive and execute commands through the serial interface SPI and is able to communicate with an NFC/RFID reader, according to the selected protocol. In TAG emulation mode, the commands “Listen” and “Send” will be used to respectively receive/send the information from/to an NFC/RFID reader. The information is returned to the NFC/RFID reader by using load modulation method

Table 2: MLX90132 Operating modes & States

Entering in Hibernate, Sleep and Tag detector states is done with the Idle command (0x07). As soon as one of these states is activated, an appropriate source signal is required to wake-up the device (see description above). The wake-up time from Sleep or Hibernate to Ready state is typically of 2ms. This time is mainly due to settling time of XTAL oscillator (HFO).

In Reader state, the MLX90132 is able to communicate with Transponder (TAG). In TAG emulation state, the MLX90132 is able to communicate with a reader by emulating a Transponder. Both states could be entered using the Protocol select command (0x02). In Ready state, the MLX90132 is fully enabled but waiting for the required command to enter either the Reader or the TAG Emulation state, without settling time penalty.

Please note the IDLE mode could be entered directly from Reader/Tag emulation state by sending the Idle command (0x07), no need to return to READY state to access the IDLE mode.

The command Protocol select command (0x02) with the option field OFF is used to return from Reader/Tag emulation state to Ready state.

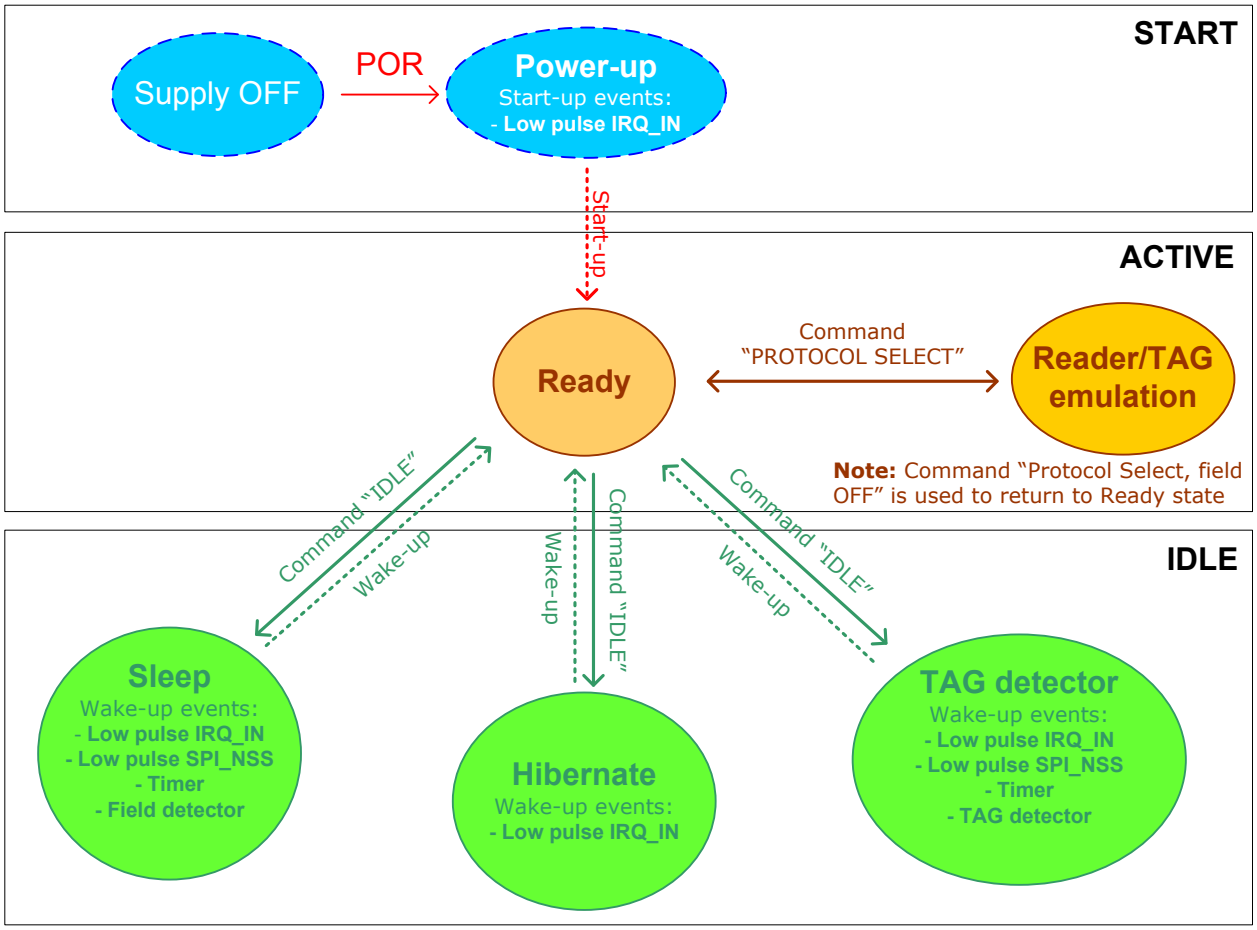

Figure 3: MLX90132 Power modes transitions

4 Start-up sequence

Once powered-up, the MLX90132 waits for a low pulse on the pin IRQ_IN (greater than 10µs) before automatically selecting the external interface (SPI or UART) and entering Ready state after a delay of approximately 2ms.

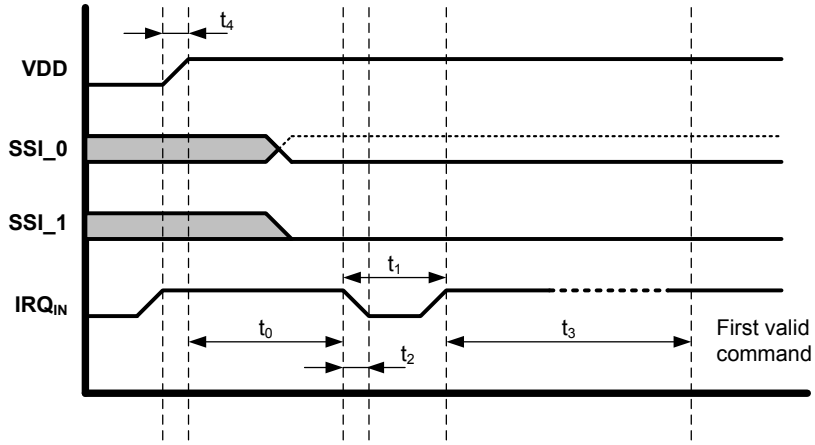

Figure 4: MLX90132 operating states transition

Figure 4 above shows the power-up sequence for a MLX90132 device where:

- t_0 is the initial wake-up delay[1)] — 100µs (minimum)
- t_1 is the minimum pulse width in IRQ_{IN} pin[1)] — 10µs (minimum)
- t_2 is the delay for the serial interface selection[1)] — 250ns (typical)
- t_3 is the delay before the MLX90132 could accept commands[1)] — 2ms (minimum)
- t_4 is the $_{VDD}$ ramp-up time[1)] — 10ms (maximum)

1) Value specified by design

The following configuration at power on reset (POR) is required to select the communication interface to be used.

Interface/Pin	SSI_1	SSI_0
SPI	0	1
UART	0	0

Table 3: Selection of the serial communication interface

Notes:

- *The Serial Interface is selected after the following falling edge of the pin IRQ_IN when leaving from POR or Hibernate states.*
- *When the MLX90132 leaves the IDLE state following a UART_RX/IRQ_{IN} low level pulse, this pulse is NOT interpreted as the UART start bit character.*

5 Communication Interface & protocol

Whatever the communication protocol selected (SPI or UART), the principle of communication is always the same: The application sends a command to the MLX90132 and waits for the appropriate answer. A simple and specific set of commands allows the configuration and control of the MLX90132.

Application		MLX90132
Select protocol (e.g. ISO15693, Single Sub-carrier)	→	
	←	Protocol selected, ready for communicate
Send protocol related data, CRC automatically added (e.g. “022000” + CRC)	→	
	←	Return TAG answer (e.g. “001234ABCD”, CRC correct)
Select another protocol (e.g. ISO14443A, 7-bit mode)	→	
	←	Protocol selected, ready for communicate
Send protocol related data, CRC automatically (e.g. “26”)	→	
	←	Return TAG answer (e.g. “0400” , Parity is OK, CRC ignored)
Turn field OFF	→	
	←	Field is OFF

Figure 5: Example of communication with MLX90132

In order to start RFID communication, the application has to choose the protocol and specify some parameters, using the command Protocol select command (0x02). When the protocol is selected, the application sends data and parses response until the next protocol is selected or a specific parameter is changed.

5.1 UART

The default baud rate is 57.6kbps and the maximum allowed baud rate is 2 Mbps.

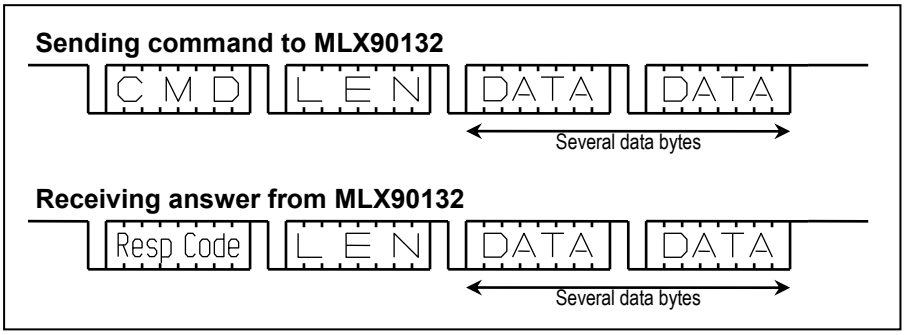

Figure 6: UART communication

Notes:

- Option “clock recovery” (“ClkRec” in Table 11) should not be used when UART interface is selected. Therefore the UART mode is not recommended for TAG emulation mode
- Length of data field can be zero, in this case no data is sent.

Warning: The UART communication is least significant bit (LSB) first.

5.2 SPI

5.2.1 Polling mode

In order to send commands and receive answers, the application software has to pass 3 stages:

1. Send the command to the MLX90132
2. Poll the MLX90132 until it is ready to transmit the response.
3. Read the response.

The application software should never read the MLX90132 without being sure that the MLX90132 is ready to send its response.

The maximum allowed communication speed is 2Mbps. Please note that the communication speed is limited to 1.5Mbps in case of TAG emulation mode with “clock recovery” option selected (“ClkRec” in Table 11, TAG/Card emulation mode).

A Control byte is used to specify the communication type and direction (see pictures below):
– 00: Send command to the MLX90132
– 11: Poll the MLX90132
– 10: Read data from the MLX90132
– 01: Reset the MLX90132

The SPI_NSS line is used to select a device on the common SPI bus; the SPI_NSS active level is LOW.

When the SPI_NSS line is inactive, all data sent by the application will be ignored and the SPI_MISO line will be set in high impedance state.

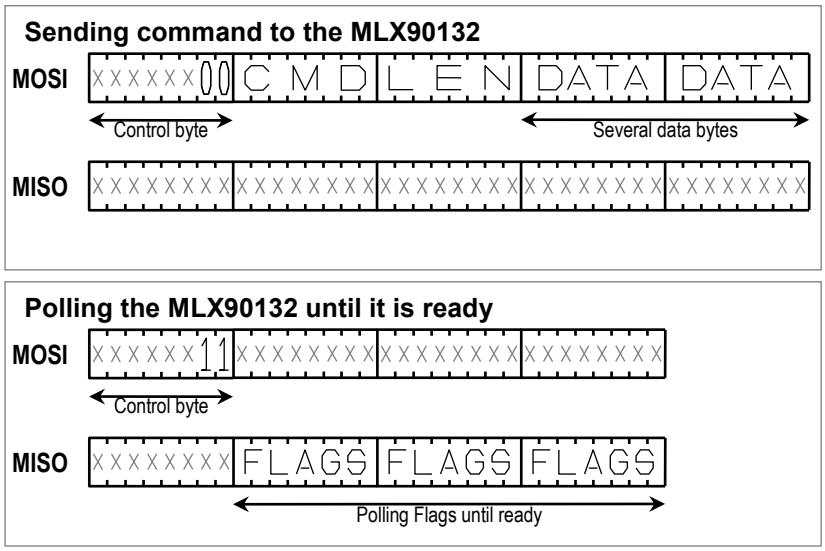

Figure 7: SPI communication, sending command & polling method

The following table shows the meaning of the flags returned by the MLX90132 device.

Bit	Description
[4:7]	RFU, will be set to “0000”
3	Data can be read from MLX90132 when set
2	Data can be sent to MLX90132 when set
[1:0]	MLX Reserved

Table 4: Interpretation of SPI flags

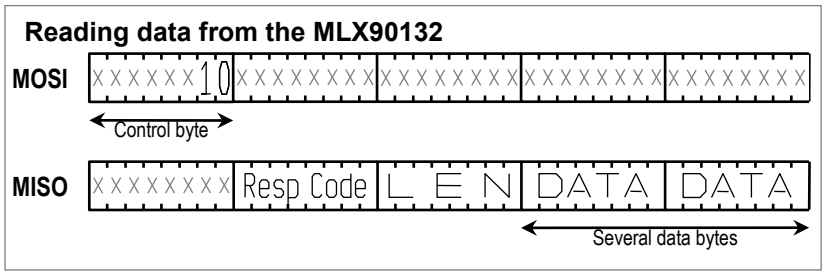

Figure 8: SPI communication, reading data from the MLX90132

Data must be sampled by the rising edge of the SPI_SCK signal.

‘Sending’, ‘Polling’ and ‘Reading’ commands must be separated by a high level of the SPI_NSS line.

For example, when the application needs to wait for data from the MLX90132, it sets to low the pin SPI_NSS and issues a ‘Polling’ command. By keeping the SPI_NSS “low”, the application can continuously read the Flags waiting for the bit indicating that the MLX90132 is ready (the flags will be automatically updated, no need to send several polling commands).Then, the application has to set high the pin SPI_NSS to finish the polling sequence. The application puts low again the pin SPI_NSS to issue a ‘Reading’ command to read data. When all data is read, the application sets high the pin SPI_NSS to terminate the communication.

The MLX90132 can issue as many 'Polling' commands as necessary.

For example, the application sets low the pin SPI_NSS to issue a 'Polling' commands. If the MLX90132 is not ready, the application can put high the pin SPI_NSS and continue its operations. Then, as soon as the application is ready again, it sets low the pin SPI_NSS to issue a 'Polling' commands, to see if the MLX90132 is ready. These operations are not time critical which makes it easy to insert in the application flow.

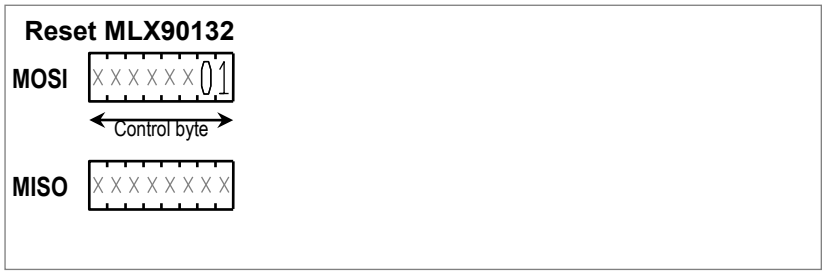

Figure 9: SPI communication reset the MLX90132

Control byte 0x01 resets the MLX90132 and places the device in Power-up state. A wake-up sequence is then necessary to start again the communication with the MLX90132.

Warning: The SPI communication is most significant bit (MSB) first.

5.2.2 IRQ mode

When the MLX90132 is configured to use the SPI serial interface, the pin IRQ_OUT is used to give additional information to the application. When the MLX90132 is ready to send back a reply it sends an Interrupt request by setting a low level on pin IRQ_OUT, which remains low until the application reads the data. The application can use the IRQ mode to skip the polling stage.

6 Commands

6.1 Command format

The structure of the command sent by the application is almost identical to the structure of the answer from the MLX90132, as shown below:

- **Command:** [CMD] + [LEN] + [DATA]
- **Answer:** [RESPCODE] + [LEN] + [DATA]

- [CMD] = Command (**1byte**)
- [LEN] = Length including only the field DATA, zero if no data sent (**1byte**)
- [RESPCODE] = Response code, depends on the command (**1byte**)
- [DATA] = Data information, depends on the command (**0 to 528bytes**)

6.2 List of commands

Code	Command	Description
0x01	IDN	Requests short information about device and its FW version
0x02	Protocol Select	Selects communication protocol and specifies some protocol-related parameters
0x03	Poll field	Returns the current value of the field detector flag (“FieldDet”)
0x04	SendRecv	Sends data using previously selected protocol and receives the response of the TAG.
0x05	Listen	Listens to the data using previously selected protocol.
0x06	Send	Sends data using previously selected protocol.
0x07	Idle	Switches device into Idle/Sleep/Hibernate mode and specifies which condition is used to exit from these modes
0x0A	BaudRate	Sets UART baud rate
0x0B	SubFreqRes	Gets the last value of sub-carrier frequency received during ISO/IEC18092 and NFC Tag Type 3 (Felica) communications
0x0D	AC-Filter	Activates/deactivates anti-collision filter
0x55	Echo	MLX90132 replies with an Echo of 0x55 to this command. **In this specific case, the command format is not respected as the data is only 0x55**
Other codes		MELEXIS reserved

Table 5: MLX90132 list of commands

6.3 IDN command (0x01)

The IDN command gives information about the MLX90132 and the internal firmware version

IDN**0x01**			
Direction	Data	Comment	Example
MCU – device	01	Command code	**0100**
	00	Length of data	
device - MCU	00	Result code	000F4E4643204653324A41535434002ACE: 4E4643204653324A4153543400= Device ID 2ACE= CRC of internal ROM
	<Len>	Length of data	
	<Device ID>	Data in ASCII format	
	<ROM CRC>	CRC calculated for ROM content	

Table 6: "IDN" command description

Note: *It takes about 6ms to calculate the CRC for the entire ROM. Application must allow sufficient time before waiting for an answer for this command.*

6.4 Protocol select command (0x02)

The "Protocol Select" command automatically configures the internal registers of the MLX90132 for the best communication performances. It also prepares the MLX90132 by automatically setting the HF field ON (except in TAG emulation state). The field will be automatically switched OFF either by sending a "Protocol select" command with "Field OFF", or when the MLX90132 returns to "Idle" mode using the "Idle" command or by selecting TAG emulation.

Protocol Select **0x02**			
Direction	Data	Comment	Example
MCU – device	02	Command code	Refer to examples in table: Table 8, below
	<Len>	Length of data	
	<Protocol>	Protocol codes (Reader) 00 = Field OFF 01 = ISO/IEC15693 02 = ISO/IEC14443-A / NFC-A 03 = ISO/IEC14443-B / NFC-B 04 = ISO/IEC18092 (212,424Kbps) / NFC-F	
		Protocol codes (TAG) 12 = ISO/IEC14443-A/ NFC-A 13 = ISO/IEC14443-B / NFC-B 14 = ISO/IEC18092 (212,424kbps)/ NFC-F	
	<Parameters>	Depends on protocol selected, refer to Table 8	
Device - MCU	00	Result code	**0000**–Protocol successfully selected
	00	Length of data	
Device - MCU	82	Error code	**8200-** Invalid command length
	00	Length of data	
Device - MCU	83	Error code	**8300 -** Invalid protocol
	00	Length of data	

Table 7: "Protocol select" command description

Parameter list for different protocols (**Reader**)					
Protocol (Reader)	Code	Parameters			Examples of commands
		Byte	Bit	Function	
Field OFF	00	0	7:0	RFU, set to '0'	**02020000**
ISO15693	01	0	7:6	RFU, set to '0'	**02020101** – Select ISO/IEC15693, SSC, 26kbps, modulation of 100%, CRC automatically added **02020107** – Select ISO/IEC15693, DSC, 26kbps, modulation 10%, CRC automatically added
			5:4	00 – 26kbps 01 – 52kbps 10 – 6kbps 11 – RFU	
			3	0 – Respect delay 312us 1 – Wait for SOF	
			2	0 - 100% modulation 1 – 10% modulation	
			1	0 – Single Sub-Carrier (SSC) 1 – Dual Sub-Carrier (DSC)	
			0	0 – No CRC added 1 – CRC auto. Added	
ISO14443A NFC-A	02	0	7:6	Transmission data rate 00 – 106kbps 01 – 212kbps 10 – 424kbps 11 – 847kbps	**02020200** – ISO/IEC14443A, 106kbps transmission & reception, Frame Delay Time (FDT) of 86/90µs
			5:4	Reception data rate 00 – 106Kbps 01 – 212Kbps 10 – 424Kbps 11 – 847Kbps	
			3:0	RFU, set to '0'	
		1	7:0	PP (max 14, i.e. 0x0E)	**Frame Delay Time (FDT) definition:** These 3 bytes are optional. When PP, MM and DD are not specified or set to 0x00, the default value corresponds to FDT of 86/90us, used during anti-collision process. Otherwise, the following formula applies: $FDT = \frac{2^{PP} \cdot (MM+1) \cdot (DD+128) \cdot 32}{13.56} [\mu s]$ If PP is defined, MM must be also set, but DD still remains optional
		2	7:0	MM (max 255, i.e. 0xFF)	
		3	7:0	DD (max 127, i.e. 0x7F)	
		4	7:0	N_{EMD}	Related to EMD algorithm, please refer to chapter Electromagnetic support (EMD)
		5	7:0	N_{EMDRES}	Related to EMD algorithm, please refer to chapter Electromagnetic support (EMD)

Table 8: Parameter values for "Protocol select" command (Reader)

Parameter list for different protocols (**Reader**)					
Protocol (Reader)	Code	Parameters			Examples of commands
		Byte	Bit	Function	
ISO14443B NFC-B	03	0	7:6	Transmission data rate 00 – 106kbps 01 – 212kbps 10 – 424kbps 11 – 847kbps	**02020301** – ISO/IEC14443B, 106kbps transmission & reception, Frame Waiting Time (FWT) of 302µs, CRC automatically added **020403010400** – ISO/IEC14443B, 106kbps transmission & reception, Frame Waiting Time (FWT) of 4.8ms, CRC automatically added
			5:4	Reception data rate 00 – 106kbps 01 – 212kbps 10 – 424kbps 11 – 847kbps	
			3:1	RFU, set to '0'	
			0	0 – No CRC added 1 – CRC auto. added	
		1	7:0	PP (max 14, i.e. 0x0E)	**Frame Waiting Time (FWT) definition:** These 2 bytes are optional. The default value corresponds to a FWT of 4949ms, answer to ATTRIB. $FWT = \frac{2^{PP} \cdot (MM+1) \cdot (DD+128) \cdot 32}{13.56} [\mu s]$ If PP is defined, MM must be also set, but DD still remains optional
		2	7:0	MM (max 255, i.e. 0xFF)	
		3	7:0	DD (max 127, i.e. 0x7F)	
		5:4	15:0	TTTT	Timing: TR0 = TTTT/13.56 us Coded with LSB first, default value 1023 = 0x3FF
		6	7:0	YY	Timing: Min_TR1 = 128 * YY / 13.56us. Default value: 0
		7	7:0	ZZ	Timing: Max_TR1 = 128 * ZZ / 13.56us. Default value:26 , i.e. 0x1A
		8	7:0	N_{EMD}	Related to EMD algorithm, please refer to chapter Electromagnetic support (EMD)
		9	7:0	N_{EMDRES}	Related to EMD algorithm, please refer to chapter Electromagnetic support (EMD)

Table 9: Parameter values for "Protocol select" command (Reader)

Parameter list for different protocols (**Reader**)					
Protocol (Reader)	Code	Parameters			Examples of commands
		Byte	Bit	Function	
ISO18092 (212,424Kb) NFC-F	04	0	7:6	Transmission data rate 00 – RFU 01 – 212kbps 10 – 424kbps 11 – RFU	**02020451** – ISO/IEC18092, 212kbps for transmission & reception, CRC automatically added Parameter 'Slot counter' is optional, the default value 00 (1 slot) will be used, if not present in the command. For command SDD (Single Device Detection), the bit 4 must be set to 0, In this case RWT is 2.4ms for the 1st slot and 1.2ms more for each following slot as specified in protocol ISO18092
			5:4	Reception data rate 00 – RFU 01 – 212Kbps 10 – 424Kbps 11 – RFU	
			3:1	RFU, set to '0'	
			0	0 – No CRC added 1 – CRC auto. added	
		1	7:5	RFU, set to '0'	
			4	0 - RWT = 2.4ms 1 – RWT is specified by PP:MM	
			3:0	Slot counter 0x0 – 1 slot 0x1 – 2 slots … 0xF – 16 slots	
		2	7:0	PP (max 14, i.e. 0x0E)	**Request Waiting Time (RWT) definition:** These 3 bytes are optional. The default value corresponds to a RWT of 302µs. $RWT = \frac{2^{PP} \cdot (MM+1) \cdot (DD+128) \cdot 32}{13.56} [\mu s]$ if PP is defined, then MM must be also defined while, DD remains optional
		3	7:0	MM (max 255, i.e. 0xFF)	
		4	7:0	DD (max 127, i.e. 0x7F)	

Table 10: Parameter values for "Protocol select" command (Reader)

Parameter list for different protocols (**TAG Emulation**)					
Protocol	Code	Parameters			Examples of commands Comments
		Byte	Bit	Function	
ISO14443A NFC-A	12	0	7:6	Transmission data rate 00 – 106kbps 01 – 212kbps 10..11 - RFU	**02021200** – TAG/Card emulation ISO/IEC14443A, 106kbps for transmission & reception, return error if no HF field detected, HFO used as master clock **0202120A** – TAG/Card emulation ISO/IEC14443A, 106kbps for transmission & reception, wait for HF field, CLKREC use as master clock
			5:4	Reception data rate 00 – 106kbps 01 – 212kbps 10..11 – RFU	
			3[1)]	0 = Return an error, if no field 1 = Wait for field	
			2	RFU, set to '0'	
			1	0 = HFO 1 = ClkRec	
			0	RFU, set to '0'	
ISO14443B NFC-B	13	0	7:6	Transmission data rate 00 – 106kbps 01 – 212kbps 10 – 424kbps 11 – 847kbps	**02021300** – TAG/Card emulation ISO/IEC14443B, 106kbps for transmission & reception, return error if no HF field detected, HFO use as master clock, CRC automatically added **0202130A** – TAG/Card emulation ISO/IEC14443B, 106kbps for transmission & reception, wait for HF field, CLKREC use as master clock, CRC automatically added
			5:4	Reception data rate 00 – 106kbps 01 – 212kbps 10 – 424kbps 11 – 847kbps	
			3[1)]	0 = Return an error, if no field 1 = Wait for field	
			2	RFU, set to '0'	
			1	0 = HFO 1 = ClkRec	
			0	0 – No CRC added 1 – CRC auto. added	
ISO18092 (212,424kb) NFC-F	14	0	7:4	RFU, set to '0'	**02021400** – TAG/Card emulation ISO/IEC18092, return error if no HF field detected, HFO use as master clock, CRC automatically added Note that it is not necessary to select a data-rate for ISO18092card mode, Data-rate will be automatically detected and adjusted during reception (application can read this information by sending "SubfreqRecv" command).
			3[1)]	0 = Return an error, if no field 1 = Wait for field	
			2	RFU, set to '0'	
			1	0 = HFO 1 = ClkRec	
			0	0 – No CRC added 1 – CRC auto. added	

Table 11: Parameter values for "Protocol select" command (TAG Emulation)

[1)] This option will be executed only after a "listen" command has been sent. Please refer to the chapter Listen command (0x05) for more information.

6.5 PollField command (0x03)

The “PollField” command is used to detect the presence of an HF field by monitoring the flag “FieldDet”. This command returns the current value of the flag “FieldDet”. The parameters <Presc> and <Timer> can also be used to define a time during which the MLX90132 continuously scans for the presence of HFfield. The answer to the “*PollField*” command is available with the flag <FieldDet> updated accordingly, after the scanning period is terminated.

PollField**0x03**			
Direction	Data	Comment	Example
MCU – device	03	Command code	**0300** – Check if Field is ON or OFF
	<Len>	Length of data	**0303010FFF**– Wait for field appearance during(16*256)/13.56=302µs
	<Flags>	Timer flag (Optional) 01 – Wait for field appearance 00 – Wait for field disappearance	
	<Presc>	Timer prescaler (Optional)	Parameters Flags, Presc and Timer are optional. They must be specified if application has to wait for field appearance or disappearance.
	<Timer>	Timer time-out (Optional)	The time to wait is: $\text{Time} = \frac{(\text{Presc}+1)\cdot(\text{Timer}+1)}{13.56}[\mu s]$
Device - MCU	00	Result code	**000101 – HF field is detected**
	01	Length of data	
	<FieldDet>	[7:1] – RFU [0] – 0 : No HF field detected 1 : HF field detected	

Table 12: “PollField” command

Note: *When the MLX90132 is selected in reader mode (protocol select command), the HF field will be automatically turned ON and the flag “FieldDet” will be set to ‘1’ (the MLX90132 detects its own field). Consequently, the PollField command should be used in Tag/Card Emulation state or in Reader state with the HF field set OFF.*

6.6 SendRecv command (0x04)

This command is used to send specific protocol data and receives corresponding answer. Before sending this command, the application must select a protocol using the Protocol select command. If the response of the Transponder was successfully received and decoded, the field <Data> will contain additional information which is protocol specific. This is explained in the Table 14 below.

SendRecv**0x04**			
Direction	Data	Comment	Example
MCU – device	04	Command code	**Depends on protocol previously selected!** **0403022012**– Command "Read single block 12" (ISO/IEC15693 protocol)
	<Len>	Length of data	
	<Data>	Data to be sent	
Device - MCU	<ResultCode>	Result code	**8008000000000077CF00 -** The response of the TAG is successfully decoded. This is an example of response from an ISO15693 TAG. The result code might contain additional information on the extended size of received data. Please refer to paragraph **Support of extended frames** below.
	<Len>	Length of data	
	<Data>	Data received. Interpretation depends on protocol	
Device - MCU	<ErrorCode>	Error code	Please refer to the error code table summary in the chapter List of Error codes
	<ErrorBufLen>	Length of Error Buffer stored during EMD algorithm	
	<ErrorBuf>	Error Buffer stored during EMD algorithm	

Table 13: "SendRecv" command description

Data format for transmission						
Protocol	Explanation	Response example				Comments
ISO15693	Send example	04	03	022000		If length of data is Zero, only EOF will be sent. This can be used for anti-collision procedure
	Command code					
	Length of entire data field					
	Data					
ISO14443A NFC-A	Send example	04	07	9370800F8C8E	28	For bit oriented protocol, frames could be split by setting the bit **SplitFrame** to one. In this case, the MLX90132 will send the last byte of the command with none integer number of bits, according to the field **number of significant bits in last byte**. In reception, the MLX90132 expects to receive the complement (**8 – "number of significant bits in last byte"**). This option is used during anti-collision procedure.
	Command code					
	Length of entire data field					
	Data					
	Transmission flags: 7 – 0 : ISO14443A 1: Topaz format (use EOF instead of P, use SOF at the beginning of each byte, make pause between bytes, assume 1st byte as 7-bit) 6 – SplitFrame if set 5 – append CRC if set 4 – Auto. add the parity bit in if set to '0'[1)] 3:0 – number of significant bits in last byte					
ISO14443B NFC-B	Send example	04	03	050000		
	Command code					
	Length of entire data field					
	Data					
ISO18092 (212,424Kb) NFC-F	Send example	04	05	00FFFF0000		
	Command code					
	Length of entire data field					
	Data					

Table 14: Parameter values for "SendRecv" command

[1)]The process of automatically calculating and adding the parity bit by the MLX90132 can be disabled by setting the bit 4 of the flags to ‘1’. In this case, the application must add one byte to the data with the most significant bit corresponding to the parity bit. The other bits of these additional bytes are not considered and can be set to ‘0’ or ‘1’. The datastream will then look like: <DataByte><Parity><DataByte><Parity>.

Interpretation of <Data> field for different protocols			
Protocol	Explanation	Response example	Comments
ISO15693	Response example Result code Length of entire data field Data received from TAG Original (received) value of CRC 7:2 – RFU 1 – CRC error if set 0 – Collision is detected if set	80 08 0000000000 77CF 00	**000000000077CF**- this is a response on Read Single Block command for Iso15693 TAG. Other fields are added by the device
ISO14443A NFC-A	Response example Result code Length of entire data field Data received from TAG 7 – Collision is detected 6 – RFU 5 – CRC error 4 – parity error 3:0 – shows how many significant bits are there in the first byte 7:0 – Index of the first byte where collision is detected 7:4 – RFU 3:0 – Index of the first bit where collision is detected	80 09 80B30B8DB500 00 00 00	ISO/IEC14443A is bit oriented protocol, and non-integer amount of bytes can be received. **Number of significant bits in the 1st byte** is the same as indicated in Send command. To calculate a position of a collision, application has to take **index of byte** first. **Index of bit** indicates a position inside this byte. Note that both indices start from 0 and bit index can be 8, meaning that collision could also affect the parity bit. Note that collision information is only present when protocol ISO/IEC14443A with a data rate of 106kbps for transmission and reception is selected. When others protocols are selected, the two additional bytes are not transmitted.
ISO14443B NFC-B	Response example Result code Length of entire data field Data received from TAG Original (received) value of CRC 7:2 – RFU 1 – CRC error if set 0 – RFU	80 0F 5092036A8D00000000007171 3411 00	
ISO18092 (212,424Kb) NFC-F	Response example Result code Length of entire data field Data received from TAG 7:2 – RFU 1 – CRC error if set 0 – RFU	80 12 01010105017B06941…93FF 00	**801201010105017B06941004014B024F4993FF00** – typical answer with no error detected

Table 15: “SendRecv” command, interpretation of <data> field for different protocol

6.6.1 Support of extended frames

In reader mode it is possible to receive up to 528 bytes of frame data. The extended size is included in the command code as follows:

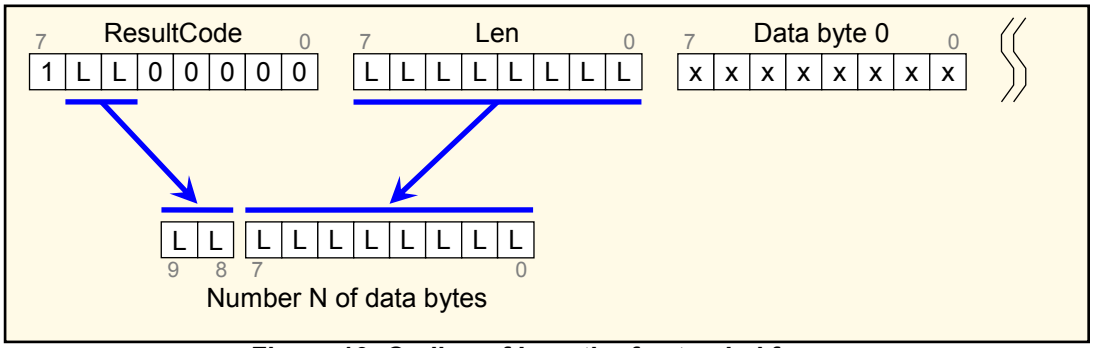

Figure 10: Coding of Length of extended frames

Consequently, the *ResultCode* returned depends on the length of the decoded frame received by the MLX90132.

Direction	Result Code	Length (LEN)	Effective length of received data	Comment
MCU - device	0x80	0x00 – 0xFF	0 – 255 bytes	
	0xA0		256 – 511 bytes	
	0xC0		512 – 528 bytes	
	0x90		0 – 255 bytes	In ISO/IEC14443A only in case of none integer number of bytes
	0xB0		256 – 511 bytes	
	0xD0		512 – 528 bytes	

Table 16: Coding of Length of extended frames

6.6.2 List of Error codes

The error code returned in the case of a“SendRecv” command includes the last error raised by the device in the field<ErrorCode>. But, it could also include a buffer of error if the EMD algorithm is enabled. This list of errors is stored into the dedicated buffer of maximum 8-bytes <ErrorBuf> with its length indicated in the error buffer length value <ErrorBufLen>. The list of error codes which could be returned after a “SendRecv” command is shown in the table below. The error codes marked with a * could be raised during the EMD process and stored in the Error buffer. For more information related to the EMD algorithm, please refer to the chapter Electromagnetic support (EMD) below.

Direction	Error Code	Definition
Device - MCU	0x61*	SOF error during the EMD process
	0x62*	CRC error during the EMD process
	0x63*	SOF error in ISO14443B occurs during high part (duration of 2 to 3 Elementary Unit Time, ETU)
	0x65*	SOF error in ISO14443B occurs during low part (duration of 10 to 11 Elementary Unit Time, ETU)
	0x66*	Extra Guard Time (EGT) error in ISO14443B
	0x67*	TR1 set by card too long in case of protocol ISO14443B
	0x68*	TR1 set by card too short in case of protocol ISO14443B
	0x86	Hardware Communication error
	0x82	Invalid command Length
	0x83	Invalid Protocol
	0x87	Frame waiting timeout (no valid reception) or no TAG
	0x88	Invalid SOF
	0x89	Receive buffer overflow (too many bytes received)
	0x8A	Protocol Framing error as follows: • ISO14443A & ISO18092 (106kbps) : Modified Miller, wrong symbol sequence • ISO14443B: Start/Stop bit polarity • ISO18092 (212,424kbps): SYNC ≠ 0xB24D
	0x8B	EGT time out (ISO14443B)
	0x8C	Invalid length received during ISO18092 (212,424kbps) communication (2 < Length < 255)
	0x8D	CRC error in case of protocolISO18092 (212,424kbps)
	0x8E	Reception lost without EOF received

Table 17: List of error codes for “SendRecv” command

6.7 Listen command (0x05)

This command is used with the MLX90132 in Tag emulation state to listen for the command from the reader. Before sending this command the application has to select a protocol using “Protocol Select” command with the related options.

Listen**0x05**			
Direction	Data	Comments	Example
MCU – device	05	Command code	**0500** – Listen for a request from reader
	00	Length of data	
Device - MCU	00	Result code	**0000-** No error. Confirmation that device now is in listening mode
	00	Length of data	
Device - MCU	82	Error code	**8200 -** Invalid command length
	00	Length of data	
Device - MCU	83	Error code	**8300 -** Invalid protocol or protocol is not supported.
	00	Length of data	
Device -MCU	85	Error code	**8500 -** Canceled by user using “Echo” command
	00	Length of data	
Device - MCU	8F	Error code	**8F00 -** No HF field detected, command cannot be executed
	00	Length of data	

Table 18: “Listen” command description

When the “listen” command is executed and the option “Waits for field” is activated, the MLX90132 waits for the HF field activation and corresponding request coming from an RFID reader.
If the option “Return an error if no field” is activated, the MLX90132 directly returns an error if no HF field is detected.

If the HF field is interrupted by the reader while the MLX90132 is waiting for the request, it will leave the listen command and return the error code 0x8F00.To wait for new request, the application must issue a new “listen” command.

The user can cancel the “listen” mode by issuing an “echo” command 0x55. When cancelled, the MLX90132 replies with a code 0x55 (as a sync reply) plus “Cancelled by user” message corresponding to 0x85, 0x00. To cancel the “listen” mode, the following procedure should be followed:

- Send the ECHO command 0x55 to cancel the “listen” mode
- Set the pin SPI_NSS to low, to read back the buffer content
- Read the sync reply 0x55
- By keeping SPI_NSS low, read the rest of the buffer (could be cancelled by user 0x8500 message or correct data information 0x80<LEN><DATA>)
- Set the pin SPI_NSS high to continue the operation

Possible return codes are listed in the table below.

Respond codes from the device in Listen mode			
Direction	Data	Comments	Example
Device - MCU	80	Result code	**800605000071FF00 -** The request from the Reader is decoded. This is an example of Request in Iso14443-B protocol
	<Len>	Length of data	
	<Data>	Data received. Interpretation depends on protocol	
Device - MCU	86	Error code	**8600 -** Communication error
	00	Length of data	
Device - MCU	87	Error code	**8700 -** Listening mode was cancelled by the application
	00	Length of data	
Device - MCU	88	Error code	**8800 -** Invalid SOF
	00	Length of data	
Device – MCU	89	Error code	**8900 -** Receive buffer overflow
	00	Length of data	
Device – MCU	8A	Error code	**8A00 -** Protocol Framing error: - ISO14443A & ISO18092 (106kbps): Mod. Miller, wrong symbol sequence - ISO14443B: Start/Stop bit polarity - ISO18092 (212,424kbps): SYNC ≠ 0xB24D
	00	Length of data	
Device – MCU	8B	Error code	**8B00 -** EGT time out (ISO14443B)
	00	Length of data	
Device - MCU	8E	Error code	**8E00 -** Reception lost without EOF received
	00	Length of data	

Table 19: "Listen" command, possible return codes

If the request from the Reader was successfully received and decoded, the MLX90132 will send data back to the application, as shown in the following table.

Data format sent to the application in 'Listen' mode			
Protocol	Explanation	Response example	Comments
ISO14443A NFC-A	Request example Result code Length of entire data field Data received from reader Received value of BCC (if any) Received value of CRC (if any) 7 – RFU 6 – RFU 5 – CRC error 4 – Parity error 3:0 – number of significant bits in last byte	80 0A 9370800F8C8E 8D 4E01 08	The anti-collision filter could be activated with the command "AcFilter". In this case, the complete anti-collision process is supported by the MLX90132 as soon as a "Listen" command is initiated. The information will be automatically sent by the MLX90132
ISO14443B NFC-B	Request example Result code Length of entire data field Data received from Reader Original (received) value of CRC 7:2 – RFU 1 – CRC error if set 0 – RFU	80 06 050000 71FF 00	
ISO18092 (212, 424kbp) NFC-F	Request example Result code Length of entire data field Data received from reader 7:2 – RFU 1 – CRC error if set 0 – RFU	80 06 00FFFF0000 00	

Table 20: Data format sent to the application in "Listen" mode

6.8 Send command (0x06)

This command is used with the MLX90132 in TAG emulation state, to send data back to the reader. This command sends specific protocol data without waiting for an answer.

Send **0x06**			
Direction	Data	Comments	Example
MCU – device	06	Command code	**Depends on protocol previously selected!**
	<Len>	Length of data	
	<Data>	Data to be sent	**040C50920E997500000000B37171** – Emulation of TAG response in ISO14443-B protocol
Device - MCU	00	Result code	**0000 -** Data was successfully sent
	00	Length of data	
Device - MCU	82	Error code	**8200 -** Invalid length
	00	Length of data	
Device - MCU	83	Error code	**8300 -** Invalid protocol previously selected by Select Protocol command
	00	Length of data	

Table 21: "Send" command description

Format of data to be sent using 'Send' command			
Protocol	Explanation	Response example	Comments
ISO14443A NFC-A	Send example Command code Length of entire data field Data 7:6 – RFU 5 – Append CRC 4 – RFU 3:0 – number of significant bits in first byte	06 03 0400 08	The anti-collision filter could be activated with the command "AcFilter". In this case, the complete anti-collision process is supported by the MLX90132 as soon as a "Listen" command is initiated. The information will be automatically sent by the MLX90132
ISO14443B NFC-B	Send example Command code Length of entire data field Data	06 04 01020304	
ISO18092 (212,424Kb) NFC-F	Send example Command code Length of entire data field Data Slot number (in which to reply)	06 05 01020304 00	The number of slot in which to reply is entered by the application in the field <Slot number>. In this case, the MLX90132 automatically manages the related timings defined by the protocol, to answer to the corresponding slot. This parameter is used for the Single Device Detection (SDD) process, For other commands, the field <Slot number> should simply be set to zero.

Table 22: Format of data to be sent using "Send" command

6.9 Idle command (0x07)

This command is used to switch the MLX90132 into low-power mode. Several sub-modes or states could be selected as shown in the table below. Please note that except when an error occurs (the answer is then directly sent), the response to an Idle command is sent only when the MLX90132 exits the low-power mode.

Idle**0x07**			
Direction	Data	Comments	Example
MCU – device	07	Command code	**0x070E0A210038011800086060 54603F00**– Tag detector with LFO set at 32kHz. Possibility to WU on low level IRQ_{IN} **0x070ECB210038011800086060 54603F10** – Tag detector with LFO set at 4kHz**.** Possibility to WU on low level IRQ_{IN} and timeout (MaxSleep set to 0x10)
	0E	Length of data	
	<WUFlags>	Specifies wake-up sources and LFO frequency. Refer to Table 24	
	<EnterCtrlL>	2 bytes: Settings to enter Idle mode, refer to Table 25 below	
	<EnterCtrlH>		
	<WUCtrlL>	2 bytes: Settings to wake-up from Idle mode (**recommended value = 0x3800**), refer to Table 25 below	
	<WUCtrlH>		
	<LeaveCtrlL>	2 bytes: Settings to leave Idle mode (**recommended value = 0x1800**), refer to Table 25 below	
	<LeaveCtrlH>		
	<WUPeriod>	Period of time between two TAG detection bursts. Also used to specify the duration before timeout. Refer to Equation 1	
	<OscStart>	Waiting time for the HFO to stabilize (based time: LFO), **recommended value = 0x60**	
	<DacStart>	Waiting time for the DAC to stabilize (based time: LFO), **recommended value = 0x60**	
	<DacDataL>	Lower compare value for TAG detection. Note: Only the **6 MSB bits** are available	
	<DacDataH>	Higher compare value for TAG detection. Note: Only the **6 MSB bits** are available	
	<SwingsCnt>	Number of HF periods during TAG detection. Refer to Equation 2**.**	
	<MaxSleep4:0>	Maximal number of TAG detection trials before timeout. Value set to 0 during TAG detection calibration. **0x00 <MaxSleep< 0x1F (bit 7 to 5 are RFU and must be set to 0)** Also used to specify duration before timeout, refer to Equation 3**.**	
Device– MCU	0x00	Result code	**0x0001XX -** Here XX is a value of WUFlags, **please note that this response is sent only when device exits idle mode**
	0x01	Length of data	
	<WUFlags>	Content of WUFlags, please refer to Table 24 below	
Device – MCU	0x82	Error code	**0x8200 –** Invalid command length
	0x00	Length of data	

Table 23: "Idle" command description

Meaning of Wake-up settings <**WUFlags**>			
A	Register	Bit	Function
2	WUFlags	7:6 – LfoPresc	LFO prescaler. Divides LFO for state machine. 00 – 32 KHz 01 – 16 KHz 10 – 8 KHz 11 – 4 KHz
		5 – RFU, set to '0'	
		4:0 – WUFlags	Specifies the possible source on which to exit from idle mode, incase SLEEP state is selected. Each bit corresponds to one wake-up source which is updated and returned when the MLX90132 leaves the Idle routine without error bit4 - Low level on SPI_NSS bit3 – Low level on IRQ_IN, must be set to '1' bit2 – Field Detector bit1 – TAG Detector bit0 – WakeUp(WU at the end of MaxSleep cycles even if no event detected)

Table 24: Field <WUFlags> definition in "Idle" command

Meaning of power settings <**EnterCtrlH:EnterCtrlL**>, <**WUCtrlH:WUCtrlL**> and <**LeaveCtrlH:LeaveCtrlL**>		
A	Register	Comment
0	CtrlL	7 – Initial DAC compare index ('0' = DacDataL, '1' = DacDataH used for the 1st comparison) 6 – RFU, must be set to '0' 5 – LFO enable(needs to be set to '1' in WUCtrl) 4 – HFO enable (needs to be set to '1' in WUCtrl) 3 – VDDA enable (needs to be set to use HFO, see recommended values in Table 23 above) 2 – Hibernate state enable 1 – RFU 0 – Sleep state enable
1	CtrlH	7:2 – RFU, must be set to '0' 1 – Field detector enable 0 – IREF (needs to be set to '1' in WUCtrl, otherwise must be put to '0')

Table 25: Fields <EnterCtrl>, <WUCtrl> and <LeaveCtrl> definition in "Idle" command

Notes:

- *The bytes <EnterCtrl> define the configuration when entering the IDLE mode. The bytes <WUCtrl> define the configuration when the device wakes-up from the IDLE mode (recommended value 0x3801). The bytes <LeaveCtrl> define the configuration when leaving the IDLE mode, after wake-up.*
- *The Hibernate state is entered by setting the "Hibernate state enable" flag to '1' and the Sleep state is entered by setting the "sleep state enable" flag to '1', both in the WUFlags register.*

Equation 1: Sleep period

$$\mathbf{t_{Sleep_TagDet} = 256 \cdot t_L \cdot (WUPeriod + 2)[s]}$$

Equation 2: HF ON period

$$\mathbf{t_{HFon_TagDet} = \frac{SwingCnt}{f_{carrier}}\ [s]}$$

Equation 3: Duration before Timeout

$$\mathbf{t_{MaxSleep_TagDet} = (t_{HFon_{TagDet}} + t_{Sleep_{TagDet}}) \cdot (MaxSleep + 1)[s]}$$

With:

$$t_L = \frac{1}{f_{LFO}}[s] \quad \text{and} \quad t_{carrier} = \frac{1}{f_{HFO}}[s]$$

6.10 BaudRate command (0x0A)

This command is used to change the UART baud rate.

Set UART baud rate **0x0A**			
Direction	Data	Comments	Example
MCU – device	0A	Command code	
	01	Length of data	
	<BR_Ratio>	New BR ratio = <BR_Ratio>*2+2 See following table: Baud rate ratio 255 – 13.56/512 ~26.48kbps 254 – 13.56/510 ~26.59kbps 253 – 13.56/508 ~26.7kbps . . . 117 – 13.56/236 ~57.7kbps (default value) . . . 2 – 13.56/6 ~2.26Mbps 1:0 – Not used	
Device - MCU	55	"Echo" code of 0x55	**55 -** New baud rate is used to reply

Table 26: "Baudrate" command description

6.11 SubFreqRes command (0x0B)

This command returns the last sub-carrier frequency measured during communication. It is used to measure the data-rate for protocols ISO/IEC18092 (212,424Kbps) / NFC-F. Please note that this operation is automatically performed by the MLX90132 when configured in Tag emulation mode, ISO/IEC18092 & NFC-F.

SubFreqRes**0x0B**			
Direction	Data	Comments	Example
MCU – device	0B	Command code	**0B00**
	00	Length of data	
Device - MCU	00	Result code	**00010F -** Here 0F is a frequency divider. Use this value to configure the MLX90132
	01	Length of data	
	<FreqSc_Ratio>	Ratio of measured sub-carrier frequency, refer to Equation 4	

Table 27: "SubFreqRes" command description

SubFreqRes reports the frequency divider. To calculate the real frequency use this formula

Equation 4: **Byte FreqSc_Ratio calculation:**

$$f_S = \frac{f_{carrier}}{2\cdot(FreqSc_Ratio+1)}\,[Hz]$$

6.12 AcFilter command (0x0D)

This command is used with the MLX90132 in TAG emulation, ISO/IEC14443-A. If activated, it autonomously handles the anti-collision algorithm. If not activated, all received commands will be sent to the application.

If the filter is activated, the MLX90132 will interpret the ISO/IEC14443-A commands sent by the reader and performs the anti-collision procedure. In this case, data will be sent to the external microcontroller only when the anti-collision procedure is finished.

Activate/deactivate anti-collision filter **0x0D**			
Direction	Data	Comments	Example
MCU – device	0D	Command code	**0D0B4400AA8804485BA1120000** - Activate filter for 2-cascade anti-collision Note that length can be 7 – for 1-cascade level filter 11 – for 2-cascade levels filter 15 – for 3-cascade levels filter All other values will cause 'Invalid command length' error. **0D00** – Return AC state and deactivate AC filter **0D01XX** – Force AC state to XX value **0D020000** – Returns AC state without deactivating filter
	<Len>	Length of data	
	<ATQA> (2bytes, LSByte 1st)	Coding of ATQA, answer to REQA command (refer to ISO/IEC14443A standard)	
	<SAK>	Coding of SAK, select acknowledgement (refer to ISO/IEC14443A standard)	
	<UID part 1> (4bytes, LSByte 1st)	UID for cascade level 1 (Mandatory)	
	<UID part 2> (4bytes, LSByte 1st)	UID for cascade level 2 (Optional)	
	<UID part 3> (4bytes, LSByte 1st)	UID for cascade level 3 (Optional)	
Device - MCU	00	Result code	**0000** - Filter is successfully activated/deactivated
	00	Length of data = 0	
Device - MCU	82	Error code	**8200** - Invalid command length
	00	Length of data	
Device - MCU	83	Error code	**8300** - Invalid protocol
	00	Length of data	

Table 28: "AcFilter" command description

The MLX90132 is able to interpret and respond to the following commands:

Anti-collision commands supported by the MLX90132		
Command	Code	Definition
REQA	26 (7-bit)	Sense request
WUPA	52 (7-bit)	WU all request
ANTICOLL	93, 95, 97	Single device detection request
SELECT	9370, 9570, 9770	Select request

Table 29: ISO/IEC14443-A anti-collision commands supported by the MLX90132

Notes:

- The current anti-collision state can be forced using the command 0x0D01XX, with XX selected according to Table 30 below.
- Command 0x0D020000 can be used to return the current anti-collision state without deactivating the anti-collision filter. Please refer to Table 30 below for the anti-collision state.
- The command 0x0D00 will be used to return the current anti-collision state and deactivate the anti-collision filter.
- UID part 2 and 3 are optional and may not be included in the command. The UID size, as defined in the ISO/IEC14443A standard (part of the ATQA), will be updated automatically by the MLX90132 according to the UID length.

Actual state returned by the MLX90132		
Value	State	Comment
0x00	IDLE	IDLE state
0x01	READY_1	READY state after 1st part of UID is verified
0x02	READY_2	READY state after 2nd part of UID is verified
0x03	READY_3	READY state after 3rd part of UID is verified
0x04	ACTIVE	ACTIVE state
0x80	HALT	HALT state
0x81	READY*_1	READY* state after 1st part of UID is verified
0x82	READY*_2	READY* state after 2ndpart of UID is verified
0x83	READY*_3	READY* state after 3rdpart of UID is verified
0x84	ACTIVE*	ACTIVE* state

Table 30: Current state returned by the MLX90132 (as defined in ISO/IEC14443-A standard)

7 Modifying internal settings for optimal performances

7.1.1 Example: How to modify the ARC_B register

The internal registers of the MLX90132 are automatically set when the protocol is selected with the command Protocol select command (0x02). To get optimal performance, the internal register ARC_B containing the modulation index of the RFID request and the analog gain for the reception chain in reader mode can be modified. The following example shows the specific commands to be sent to read/write the register ARC_B:

Use the "Protocol Select" command (0x02) to select the appropriate communication protocol.

- Send Protocol Select command (for example ISO/IEC14443A): 0x02020200
- MLX90132 reply: 0x0000

Read Analog Configuration register (ARC_B) value

- Write the ARC_B register index to 0x01: 0x0903680001
- MLX90132 reply: 0x0000
- Read the ARC_B register value: 0x0803690100
- MLX90132 reply: 0x01DF[(1)]

Modify the value of Analog Register Configuration (ARC_B) to 0x23

- Write the ARC_B register: 0x090468010123
- MLX90132 reply: 0x0000

Read back the Analog Configuration register (ARC_B) value

- Write the ARC_B register index to 0x01: 0x0903680001
- MLX90132 reply: 0x0000
- Read the ARC_B register value: 0x0803690100
- MLX90132 reply: 0x0123

[(1)]In this example, the ARC_B register = 0xDF with 'D' = Modulation Index & 'F' = Rx amplifier gain.

The content of the register ARC_B is shown in Table 31 below with the default values in Table 32:

ARC_B register of the MLX90132			
A	Register	Bit	Function
69	ARC_B	7:4 ModIdx[1]	ASK Modulation Index : Code 1 = 10% Code 2 = 14% Code 3 = 18% Code 4 = 21% Code 5 = 24% Code 6 = 26% Code 7 = 30% Code 8 = 35% Code 9 = 39% Code A = 40% Code B = 43% Code C = 45% Code D = 96%
		3:0 Rx Gain[2]	Reception chain amplifier Gain: Code 0 = 34dB Code 1 = 32dB Code 3 = 27dB Code 7 = 20dB Code F = 8dB

Table 31: Register ARC_B description

(1) Characterized using ISO/IEC10373-6 setup and DVK90132 antenna matching
(2) Defined by design simulations

Communication protocol	Default value
ISO/IEC14443 Type A	0xDF
ISO/IEC14443 Type B	0x20
ISO/IEC18092 (Felica)	0x50
ISO/IEC 15693 – 10%	0x53
ISO/IEC15693 – 100%	0xD3

Table 32: Default value of ARC_B per protocol (Reader mode)

7.1.2 Example how to read back WUFlags content

WUFlags byte (refer to Table 24) is automatically updated after the MLX90132 wakes-up from an Idle command. In SPI mode, this byte is available to read in the FIFO register. In UART mode, this byte is asynchronously sent after wake-up. In some cases, it is useful to be able to check the WUFlags separately; the example below shows how to do it:

Read WUFlags register value

- Read the WUFlags register value: 0x0803620100
- MLX90132 reply: 0x0001XX[1]

[1] XX equal the WUFlags register value

8 Tag Detector

8.1 Operating Principle

The objective of the TAG detector function is to be able to detect the presence of an RFID label/tag or an NFC device in front of the reader's antenna, with reduced power consumption.

The TAG detector function is based on the detection of any variation of the HF field. If an RFID transponder or an NFC device approaches the reader's antenna, it influences the amplitude of the generated HF by a loading effect. This variation can be monitored by the MLX90132 to inform the external host microcontroller that an RFID transponder or an NFC device is approaching the antenna.

When set in TAG detector state, the MLX90132 periodically generates a few periods (pulses) of HF carrier frequency and measures the amplitude's field. This value is then compared to reference levels DacDataH[7:0] and DacDataL[7:0] defined by the user.

If the measured level is above DacDataH[7:0] or below DacDataL[7:0], - i.e. a change in the amplitude of the HF field occurs - the MLX90132 automatically informs the external application MCU by: either generating an IRQ on the pin IRQOUT (SPI interface), or directly sending the WUFlag register value (UART interface).In the same time it enters to Ready state and waits for a Protocol select command (0x02) command. Therefore, either the application MCU takes the control of the MLX90132 by sending a command Protocol select command (0x02) and can decide to start communicating with the TAG, or the MLX90132 goes back in idle (tag detector) mode. This mechanism is repeated until a new object is detected in the field or another kind of event appears (e.g. max number of trials reached, wake-up from host MCU …).
Before using this feature it is necessary to perform a calibration by using the MCU

The TAG detector state is entered using the Idle command (0x07) command. The values of DacDataH/DacDataL[7:0] are defined in this command, as well as the number of HF pulses and the time between two HF bursts with respectively the bytes SwingsCnt[7:0] and WUPeriod[7:0]. The MLX90132 can be forced to wake-up after a certain number of trials, even if no TAG has been detected. This number of trials is set using the bits MaxSleep[4:0].

The bit "initial DAC compare index" in register EnterCtrlL is used to select the first comparison to be performed when starting the TAG detector state. When set to '0', the TAG detector feature is started with a comparison to DacDataL[7:0].If set to '1', the TAG detector feature is started with a comparison to DacDataH[7:0]. Please note that the IREF bit in EnterCtrlH byte has to be set to allow a proper functionality of the TAG detector feature.

The following picture illustrates the TAG detector operation described above.

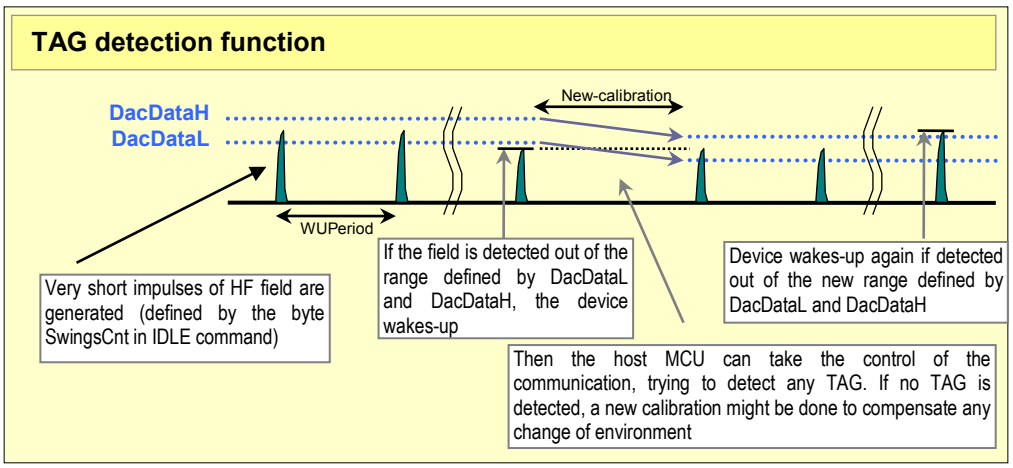

Figure 11: MLX90132 TAG detection principle

8.2 Calibration procedure

The calibration process should be performed with no tag in the environment. It consists of executing a successive tag detection sequence using a well-known configuration. This to determine the two specific reference thresholds: DacDataL and DacDataH which will be programmed in the device before entering Tag Detector Mode. Both thresholds are coded in 6 bits.

During the calibration process, DacDataH value is fixed to 0xFCand the software will vary the DacDataL value from its minimum value (0x00) to its maximum value (0xFC). At each step, the WUflags byte is read to know if the HF level is above or below the low threshold ("tag detected flag" set or not).

At the end of the calibration process, the reference level DacDataRef is found and corresponds to the value of DacDataL for which the wake-up event switches from "WakeUp at the end of MaxSleep cycles" (no tag in the RF field) to "tag detected".

To avoid too much sensitivity in the tag detection process, the use of a guard band is recommended. This value should correspond to at least 2 DAC steps.

Final recommended values with guard band:

- DacDataL= DacDataRef– Guard
- DacDataH= DacDataRef+ Guard

The parameters used to define the tag detection calibration sequence (clocking, set-up time, burst duration, etc.) must be the same as those used for the future tag detection sequences. MaxSleep has to be set to '0' for the calibration

Another and faster way (binary search: 6 steps) to calibrate the Tag Detector is described in the application note AN2_MLX90130_32_TagDetector.

9 Field Detector

The MLX90132 embeds a field detector block to measure the field level of an external HF RFID reader. This is used to be able to monitor the availability of the channel and perform the collision avoidance feature before switching ON the HF field.

The command "Poll field" can be used to monitor the HF field, the device directly returns a bit indicating that an HF field has been detected or not. The field detector can also be configured as an option to wake-up from "Idle" mode, in order to reduce the power consumption as much as possible.

10 Electromagnetic support (EMD)

The electromagnetic disturbance results in the noise that a passive/active TAG or NFC device generates before answering to a corresponding request. This disturbance is generally due to the digital processing of the passive/active TAG or NFC device which appears just before sending back the response.

The MLX90132 device supports a specific algorithm to filter EMD disturbances to successfully receive the frame from a passive/active TAG or NFC device. This algorithm is supported within the MLX90132 in Reader modes ISO14443 type-A and type-B.
The following flow-charts illustrate the algorithm which is implemented in the MLX90132 device for these 2 modes of operation. The corresponding EMD algorithm is selected with the Protocol select command (0x02) by configuring the parameter <N_{EMD}> with a non-null value. The definition of the two values <N_{EMD}> and <$N_{EMD,RES}$> used in the algorithm are defined below:

- **<N_{EMD}>:** Maximum Number of non-valid Bytes received, before the system leaves the EMD algorithm routines with an error message. Typically, this value is set to 3 or 4, meaning that failing reception with less than 3 or 4 Bytes will be considered as EMD disturbance by the algorithm without interrupting the reception process.
- **<$N_{EMD,RES}$>**: Maximum Number of non-valid and non-Integer Bytes received, before the system leaves the EMD algorithm routines with an error message. Typically, this value is set identical to the N_{EMD} value.

When processing the EMD algorithm, the MLX90132 is in kind of “standalone” mode, waiting for the presence of a valid <Start Of Frame> coming for the passive/active TAG or NFC device. This “standalone” mode only terminates with the following conditions:

1) At the end of a valid reception
2) In case a timeout error occurs (FDT/FWT time reached without valid SOF)
3) In case the identified error could be assimilated as a protocol error and not to EMD

During the whole EMD process, the MLX90132 is buffering the incoming errors which will be returned to the host application in case one of the conditions 2) or 3) above is reached. In this case, the error code returned will be as follows:

<ErrorCode> + <ErrorBufLen> + <ErrorBuf> with

- <ErrorCode>: Last error code raised during the EMD algorithm
- <ErrorBufLen>: Length of the following Buffer of Errors (max. 8 bytes)
- <ErrorBuf>: Buffer of Errors stored during the EMD algorithm (max. 8 bytes)

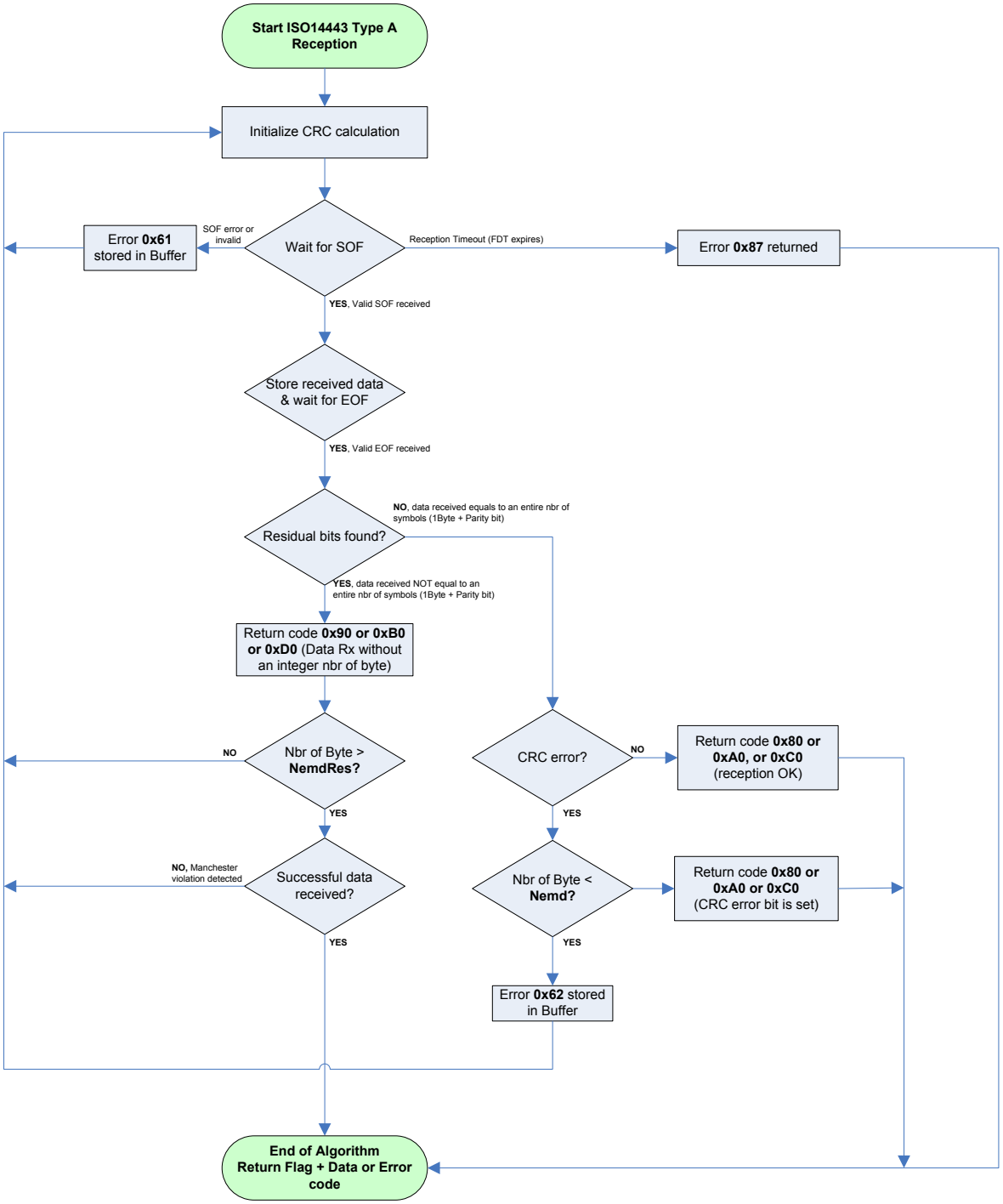

Figure 12: MLX90132 EMD Algorithm Reader/Writer ISO14443 Type A

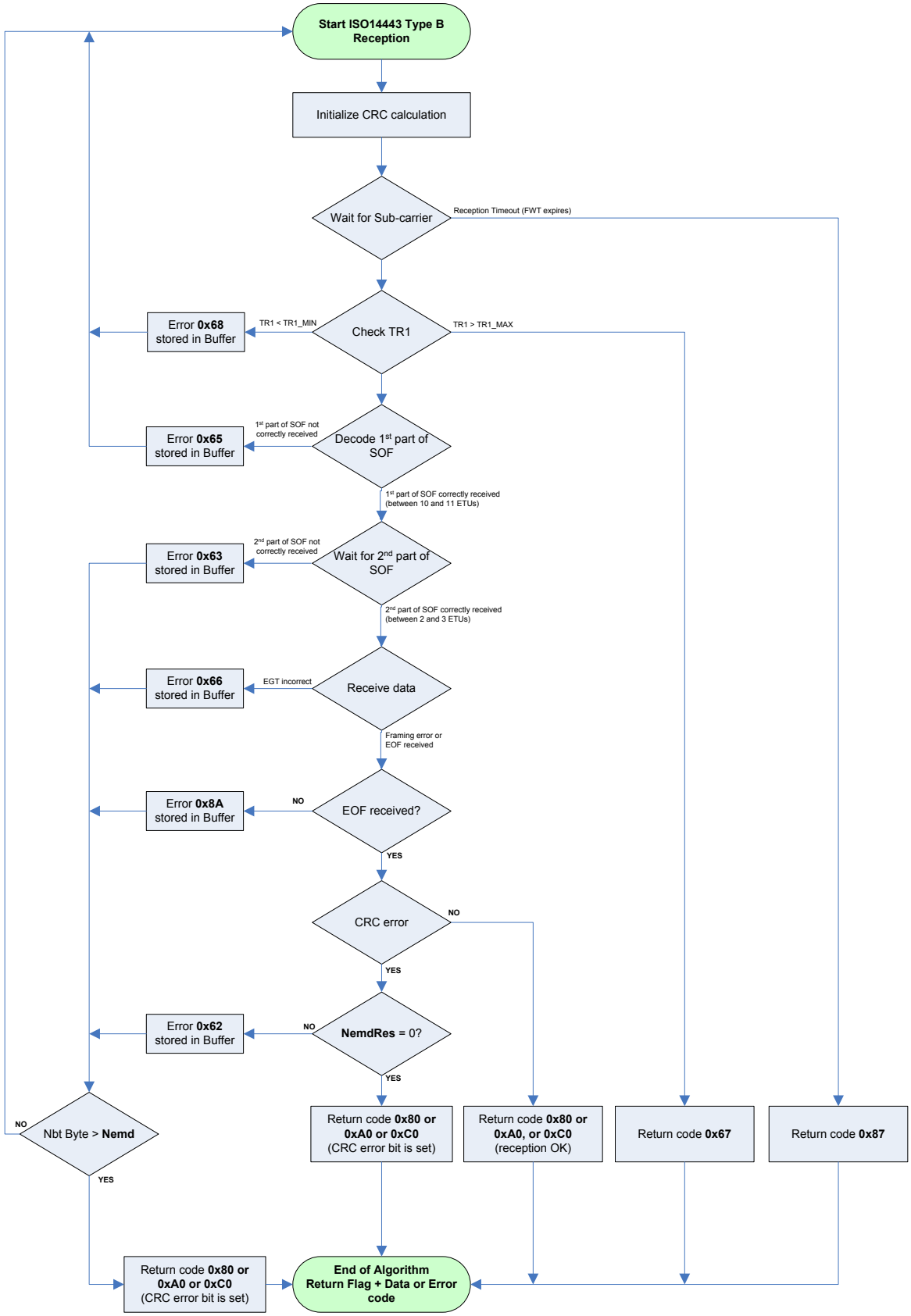

Figure 13: MLX90132 EMD Algorithm Reader/Writer ISO14443 Type B

11 Application Information

11.1 External Antenna network

RF communication performance depends on the external system antenna network and resonance conditions.

The antenna matching of the MLX90132 is reduced to a minimal component count, composed of two serial capacitors Cs and one parallel capacitor Cp. A parallel resistor Rp can also be added to adjust the antenna damping thus reducing detuning effect provoked by the presence of TAGs or Readers in front of the MLX90132. Two serial resistors R_{RX} have to be adjusted in order to avoid entering the clamping region (see Table 36 below). Finally, depending on EMC constraints, an EMI filter can be added to reduce the emission of harmonics generated by the square wave at the outputs TX1 and TX2.

Figure below gives an example of the external matching network to connect the antenna. For more information, please refer to the application note AN1_MLX90130_32_AntennaDesignGuidelines available on the Melexis website.

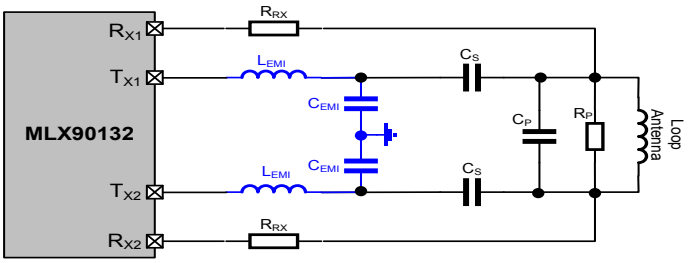

Figure 14: External antenna matching network example

11.2 Application schematic

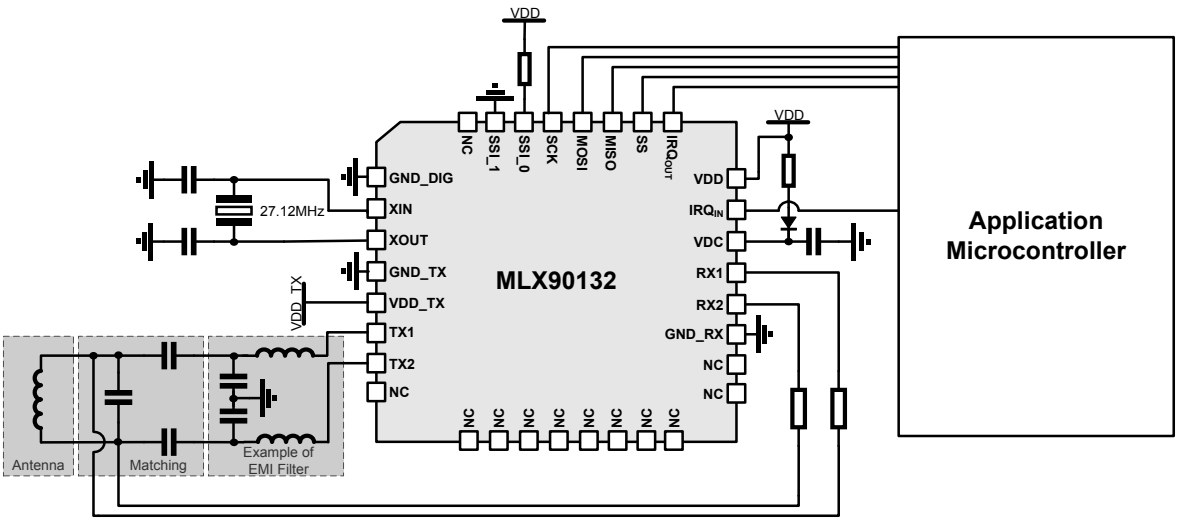

Figure 15: MLX90132 application schematic in SPI mode

12 Electrical Specifications

12.1 Absolute Maximum Ratings

Parameter	Symbol	Value	Units
Supply Voltage	V_{DD}	-0.3 to 7.0	V
Supply Voltage	V_{DD_TX}	-0.3 to 7.0	V
Input or Output voltage relative to Ground	VIO	-0.3 to VDD+0.3	V
Operating Temperature Range	T_A	-40 to 105	°C
Storage Temperature Range	T_S	-40 to 150	°C
Electrostatic discharge according to AEC-Q100-002 Human Body Model	V_{ESD_HBM}	2	kV

Table 33: Absolute maximum ratings

Note: *Exceeding the absolute maximum ratings may cause permanent damage. Exposure to absolute-maximum-rated conditions for extended periods may affect device reliability.*

12.2 DC Characteristics

Operating Parameters T_A = -40°C to 105°C

Parameter	Symbol	Conditions	Min	Typ	Max	Units
Supply voltage	V_{DD}		2.7	5	5.5	V
Supply voltage of TX driver	V_{DD_TX}		2.7	5	5.5	V

Table 34: DC characteristics

12.3 Power Consumption Characteristics

Operating Parameters T_A = -40°C to 105°C(2.7 < VDD/VDD_TX <5.5V)

Parameter	Symbol	Conditions	Min	Typ	Max	Units
Supply current in Hibernate state	$Icc_{Hibernate}$			1	8	µA
Supply current in Sleep state	Icc_{Sleep}			20	30	µA
Supply current in Ready state	Icc_{Ready}			2.5	3	mA
Supply current in RF Reader ON	$Icc_{RF\ Reader\ ON}$			100(1)		mA
Supply current in Card Emulation state	$Icc_{Card\ Em}$			1	3	mA
Supply current in Tag Detection state	$Icc_{Tag\ Det}$			45(1,2)		µA

Table 35: Power consumption characteristics

1. Parameter measured at applicative level only, using recommended output matching network
2. Following specific conditions for TAG detection: T_A = 25°C, WUPeriod = 0x1A (4x per seconds), OscStart= 0x60, DACStart= 0x60, SwingCnt = 0x3F

12.4 RF Characteristics

Operating Parameters T_A = -40°C to 105°C (2.7 <VDD/VDD_TX<5.5V)

Symbol	Parameter	Min	Typ	Max	Units
f_C	Frequency of operating field (carrier frequency)	13.553	13.56	13.567	MHz
Carrier modulation index(3)	ISO/IEC14443A ISO/IEC14443B ISO/IEC18092 ISO/IEC15693 (10% modulation) ISO/IEC15693 (100% modulation)	 8 8 10 80		100 14 14 30 100	%
Transmitter specifications					
R_{ON_3V}	Equivalent resistor of driver output TXn(2)		13		Ω
R_{ON_5V}	Equivalent resistor of driver output TXn(2)		8		Ω
P_{OUT_3V}	Output power for 3V operation (2)		70		mW
P_{OUT_5V}	Output power for 5V operation (2)		317		mW
Receiver specifications					
Z_{OUT}	Differential. input resistance between RX1/RX2(2)		80		kΩ
C_{INPUT}	Differential. input capacitance between RX1/RX2(2)		22		pF
V_{SENS}	Sensitivity(3)		6		mVp
V_{RXMAX}	Clamping voltage on RX1 (RX2) relative to Ground(2)	9.5	11	13.2	Vp

Table 36: Reader characteristics

Symbol	Parameter	Min	Typ	Max	Units
$H_{Threshold}$	HF field level of detection(2,3)	0.1875			A/m

Table 37: Field detection characteristics

1. Parameter measured using recommended output matching network
2. Value based on design simulation and/or characterization results, and not tested in production
3. Based on ISO/IEC 10373-6 & 22536 protocol measurements

12.5 SPI Characteristics

Symbol	Parameter	Min	Typ	Max	Units
f_{SCK}	SPI clock frequency			2	MHz
V_{IL}	Input low voltage			$0.3*V_{DD}$	V
V_{IH}	Input high voltage	$0.7*V_{DD}$			
V_{OL}	Output low voltage			$0.4*V_{DD}$	
V_{OH}	Output high voltage	$0.7*V_{DD}$			
$t_{SU(NSS)}$ (1)	NSS setup time		70		ns
$t_{h(NSS)}$ (1)	NSS hold time		0		
$t_{CH(SCKL)}$ (1)	Clock low time		200		
$t_{CH(SCKH)}$ (1)	Clock high time		200		
$t_{SU(SI)}$ (1)	Data slave Input setup time		20		
$t_{h(SI)}$ (1)	Data slave Input hold time			80	
$t_{v(SO)}$ (1)	Data slave output valid time		150		
$t_{h(SO)}$ (1)	Data slave output hold time		280		
$C_{b_SPI_IN}$	Capacitive load for input pins NSS, CLK, MOSI			3	pF
$C_{b_SPI_OUT}$	Capacitive load for input pins MOSI			20	

Table 38: SPI interface characteristics

1. Values based on design simulation and/or characterization results, not tested in production

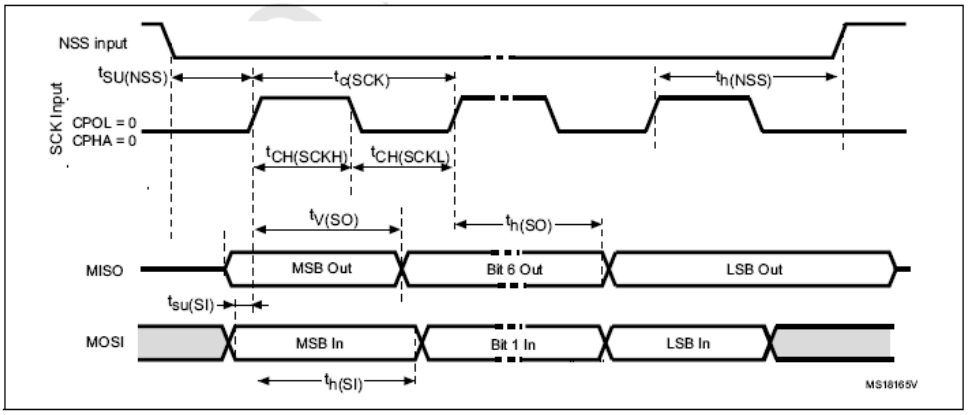

Figure 16: SPI timing diagram (Slave mode and CPOL = 0, CPHA = 0)

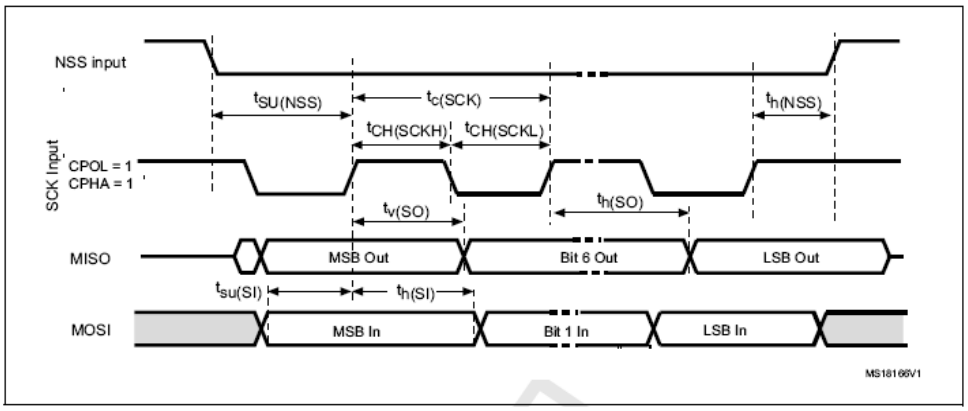

Figure 17: SPI timing diagram (Slave mode and CPOL = 1, CPHA = 1)

12.6 Oscillator Characteristics

Symbol	Parameter	Conditions	Min	Typ	Max	Units
Low Frequency Oscillator (LFO)						
f_{LFO}	Low-frequency oscillator (LFO)		20	32	43	kHz
XTAL Oscillator						
f_{XTAL}	XTAL Oscillator frequency			27.12		MHz
R_F	Feedback resistor			2		MΩ
C_L	Recommended load capacitance versus equivalent serial resistance of the crystal (RS)[3]	Rs = 30Ω		12		pF
I_2	XTAL driving current[2]	VDD = 3.3V with 12pF load		600	750	µA
g_m	Oscillator transconductance[2]	Start-up	0.04	0.32	1.41	mA/V
$t_{SU(HFO)}$[4]	Oscillator start-up time	VDD is stabilized		2		ms

Table 39: Oscillator characteristics [1] [2]

1. Resonator characteristics given by the crystal/ceramic resonator manufacturer.
2. Based on characterization, not tested in production.
3. The relatively low value of the RF resistor offers good protection against issues resulting from use in a humid environment, due to the induced leakage and the bias condition change. However, it is recommended to take this point into account if the application is used in severe humidity conditions.
4. tSU (HFO) is the startup time measured from the moment it is enabled (by software) until a stabilized 27.12MHz oscillation is reached. This value is measured for a standard crystal resonator and it can vary significantly with the crystal manufacturer.

For $C_{L1}$and C_{L2}, it is recommended to use high-quality external ceramic capacitors in the 10 pF to 20 pF range, designed for high-frequency applications, and selected to match the requirements of the crystal or resonator (see Figure 18). C_{L1} and C_{L2} are usually the same size. The crystal manufacturer typically specifies a load capacitance which is the series combination of $C_{L1}$and C_{L2}.

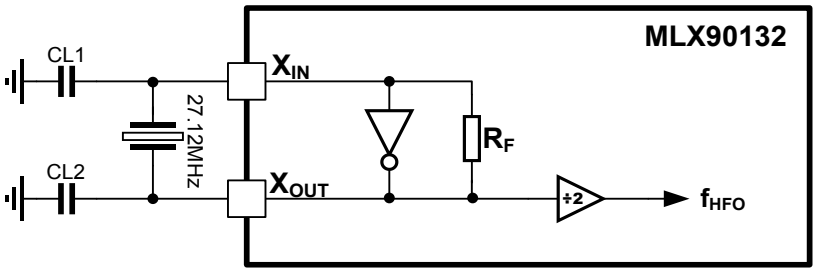

Figure 18: Typical application with a 27.12MHz crystal

14 ESD Precautions

Electronic semiconductor products are sensitive to Electro Static Discharge (ESD).

Always observe Electro Static Discharge control procedures whenever handling semiconductor products.

15 Standard information regarding manufacturability of Melexis products with different soldering processes

Our products are classified and qualified regarding soldering technology, solderability and moisture sensitivity level according to following test methods:

Reflow Soldering SMD's (Surface MountDevices)

- IPC/JEDEC J-STD-020
  Moisture/Reflow Sensitivity Classification for Nonhermetic Solid State Surface MountDevices
  (classification reflow profiles according to table 5-2)
- EIA/JEDEC JESD22-A113
  Preconditioning of Nonhermetic Surface MountDevices Prior to Reliability Testing
  (reflow profiles according to table 2)

Wave Soldering SMD's (Surface MountDevices) and THD's (Through Hole Devices)

- EN60749-20
  Resistance of plastic- encapsulated SMD's to combined effect of moisture and soldering heat
- EIA/JEDEC JESD22-B106 and EN60749-15
  Resistance to soldering temperature for through-hole mounted devices

Iron Soldering THD's (Through Hole Devices)

- EN60749-15
  Resistance to soldering temperature for through-hole mounted devices

Solderability SMD's (Surface MountDevices) and THD's (Through Hole Devices)

- EIA/JEDEC JESD22-B102 and EN60749-21
  Solderability

For all soldering technologies deviating from above mentioned standard conditions (regarding peak temperature, temperature gradient, temperature profile etc) additional classification and qualification tests have to be agreed upon with Melexis.

The application of Wave Soldering for SMD's is allowed only after consulting Melexis regarding assurance of adhesive strength between device and board.

Melexis recommends reviewing on our web site the General Guidelines soldering recommendation (http://www.melexis.com/Quality_soldering.aspx) as well as trim&form recommendations (http://www.melexis.com/Assets/Trim-and-form-recommendations-5565.aspx).

Melexis is contributing to global environmental conservation by promoting **lead free** solutions. For more information on qualifications of **RoHS** compliant products (RoHS = European directive on the Restriction Of the use of certain Hazardous Substances) please visit the quality page on our website: http://www.melexis.com/quality.aspx

16 Package Information

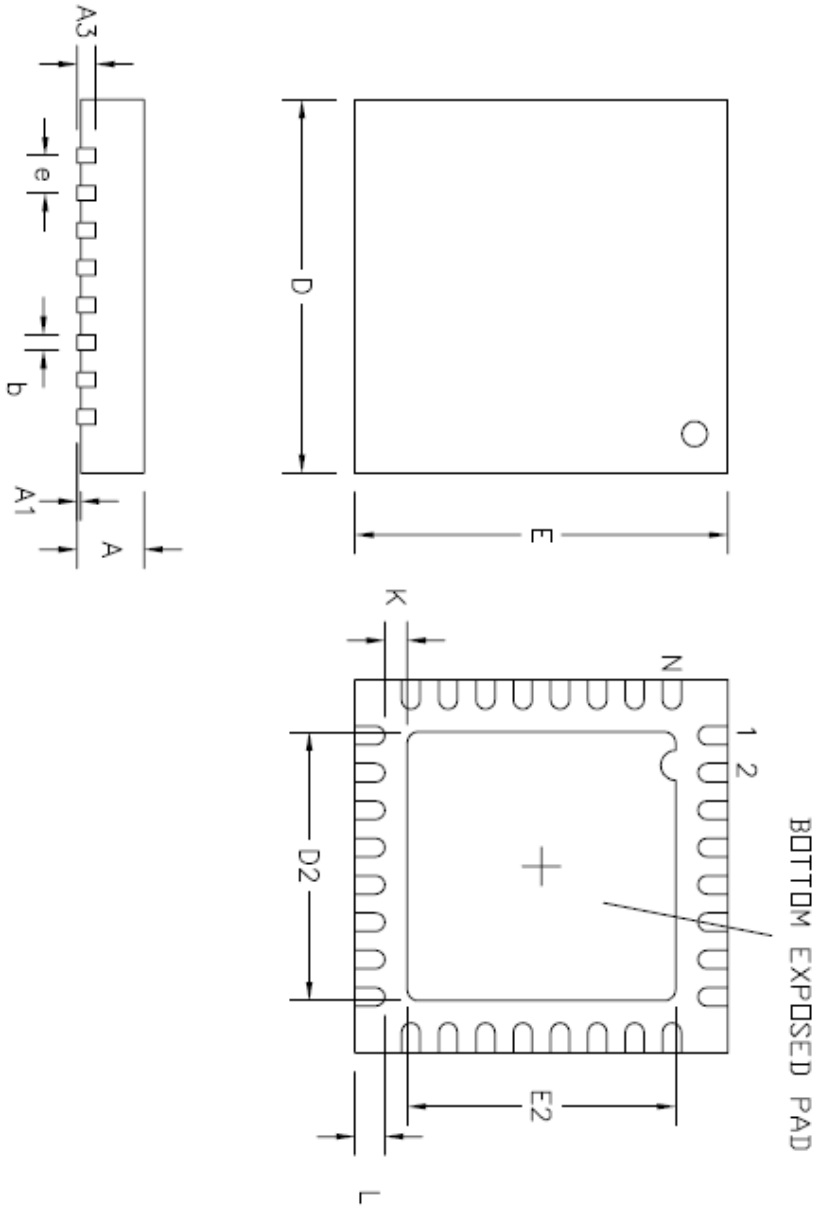

Moisture Sensitivity Level is MSL3, according as per IPC/JEDEC J-STD-20.

This table in mm

Type	DxE	N	e		A	A1	A3	D2	E2	L	K	b
quad	5 x 5	32 (Opt B)	0.50	min	0.80	0.00	0.20 REF	3.00	3.00	0.35	0.20	0.18
				max	1.00	0.05		3.20	3.20	0.45	–	0.30

Tolerance of D, E: +/- 0.1mm

17 Disclaimer

Devices sold by Melexis are covered by the warranty and patent indemnification provisions appearing in its Term of Sale. Melexis makes no warranty, express, statutory, implied, or by description regarding the information set forth herein or regarding the freedom of the described devices from patent infringement. Melexis reserves the right to change specifications and prices at any time and without notice. Therefore, prior to designing this product into a system, it is necessary to check with Melexis for current information. This product is intended for use in normal commercial applications. Applications requiring extended temperature range, unusual environmental requirements, or high reliability applications, such as military, medical life-support or life-sustaining equipment are specifically not recommended without additional processing by Melexis for each application.
The information furnished by Melexis is believed to be correct and accurate. However, Melexis shall not be liable to recipient or any third party for any damages, including but not limited to personal injury, property damage, loss of profits, loss of use, interrupt of business or indirect, special incidental or consequential damages, of any kind, in connection with or arising out of the furnishing, performance or use of the technical data herein. No obligation or liability to recipient or any third party shall arise or flow out of Melexis' rendering of technical or other services.
© 2012 Melexis NV. All rights reserved.

18 Contact Information

For the latest version of this document, go to our website at:
www.melexis.com

Or for additional information contact Melexis Direct:

Europe, Africa, Asia:	Americas:
Phone: +32 1367 0495	Phone: +1 248-306-5400
E-mail: sales_europe@melexis.com	E-mail: sales_usa@melexis.com

ISO/TS 16949 and ISO14001 Certified