1. Mechanical Dimensions:

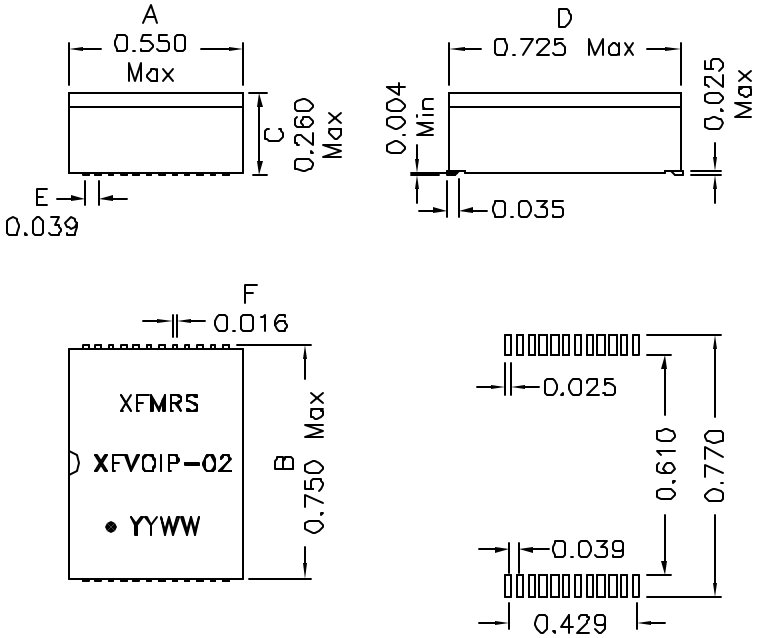

SUGGESTED PAD LAYOUT

2. Schematic:

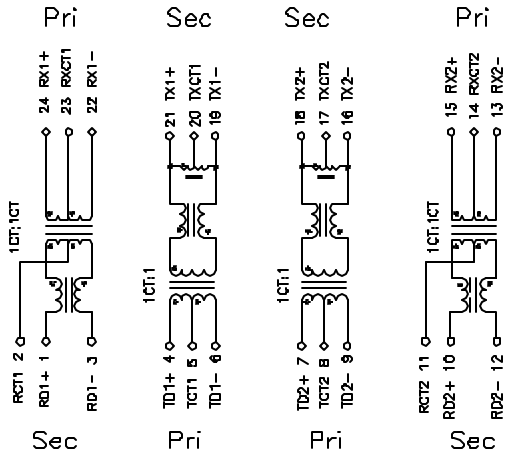

DOC. REV: B/1

3. Electrical Specifications: @25°C

ISOLATION: 1500 Vrms

INSERTION LOSS: −1.2dB MAX @1MHz−100MHz

PRI OCL: 350 uH Min @100KHz 100mV 8mADC

RETURN LOSS: 16dB Min @1−30MHz
14dB Min @40MHz
13dB Min @50MHz
−12dB Typ @60−80MHz

Differential to Common Mode Rejection:
−50dB Min @30MHz
−43dB Min @60MHz
−35dB Min @100MHz

Crosstalk: −45dB Min @30MHz
−40dB Min @60MHz
−35dB Min @100MHz

Q: 5 Min @10KHz 50mV

Notes:

1. Solderability: Leads shall meet MIL-STD-202G, Method 208H for solderability.
2. Flammability: UL94V-0
3. ASTM oxygen index: > 28%
4. Insulation System: Class F 155°C. UL file E151556
5. Operating Temperature Range: All listed parameters are to be within tolerance from −40°C to +85°C
6. Storage Temperature Range: −55°C to +125°C
7. Aqueous wash compatible
8. SMD Lead Coplanarity: ±0.004"(0.102mm)
9. Electrical and mechanical specifications 100% tested
10. RoHS Compliant Component
11. Designed for 802.3af applications

XFMRS Inc www.XFMRS.com	Title: 10/100TX DUAL MAGNETICS MODULES		
UNLESS OTHERWISE SPECIFIED TOLERANCES: .xxx ±0.010 Dimensions in INCH	P/N: XFVOIP-02		REV. B
	DWN.	Feng	Sep-27-11
	CHK.	YK Liao	Sep-27-11
SHT 1 OF 1	APP.	Joe Huff	Sep-27-11

PROPRIETARY Document is the property of XFMRS Group & is not allowed to be duplicated without authorization.