LXP3-RS2

~8.5° spot beam optimized for CREE XP-E. 14.7 mm high assembly.

TECHNICAL SPECIFICATIONS:

Dimensions	Ø 21.6 mm
Height	14.7 mm
Fastening	glue
Colour	white
Box size	480 x 280 x 300 mm
Box weight	8.9 kg
Quantity in Box	1680 pcs
ROHS compliant	yes

MATERIAL SPECIFICATIONS:

Component	Type	Material	Colour
LXP2-RS2	Lens	PMMA	
LXP3-LH1-WHT	Holder	PC	white

LEDiL is a registered trademark of LEDiL Oy in the European Union, USA, and certain other countries.

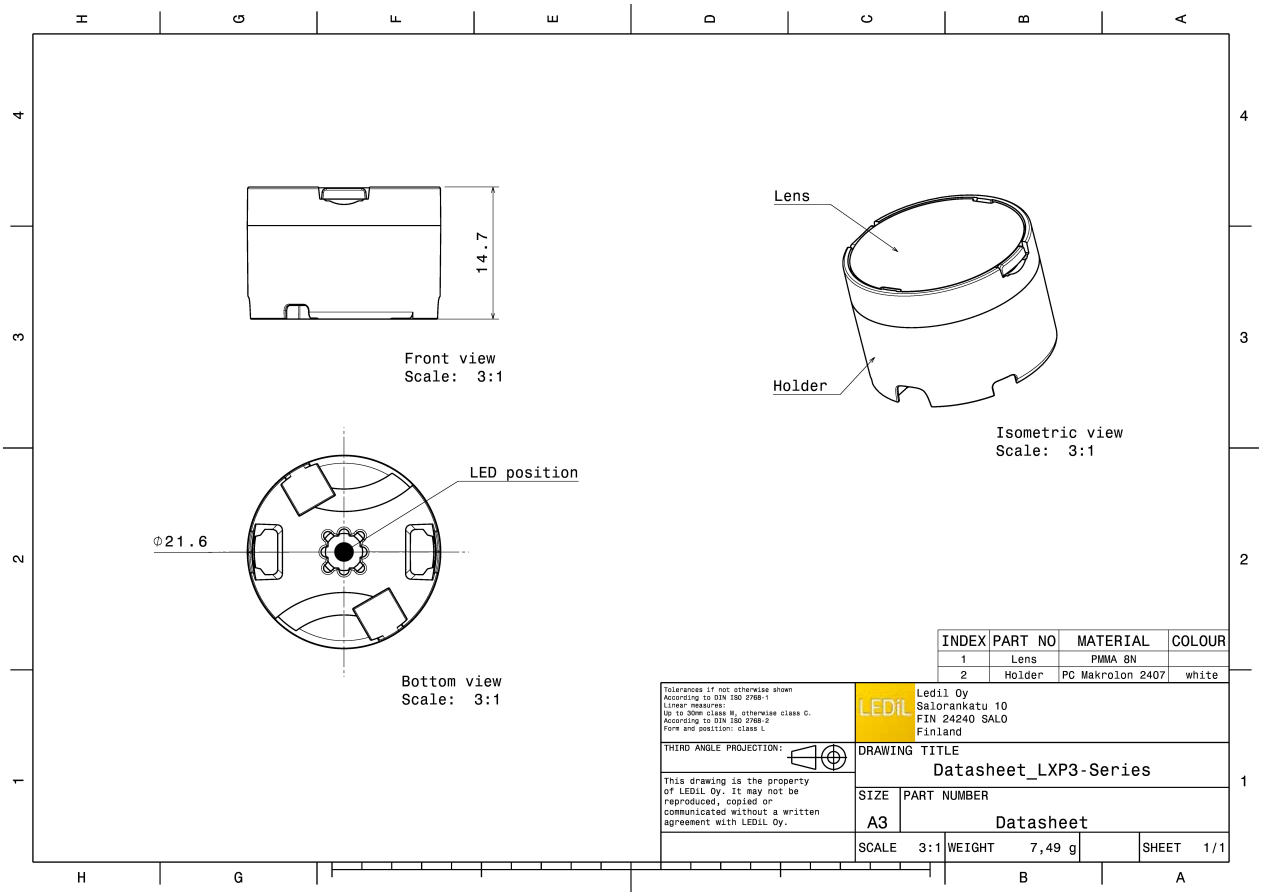

INDEX	PART NO	MATERIAL	COLOUR
1	Lens	PMMA 8N	
2	Holder	PC Makrolon 2407	white

LEDiL is a registered trademark of LEDiL Oy in the European Union, USA, and certain other countries.

PHOTOMETRIC DATA (MEASURED):

CREE

LED	XP-L HI
FWHM	8.0°
Efficiency	93 %
Peak intensity	20.000 cd/lm
Required components:	

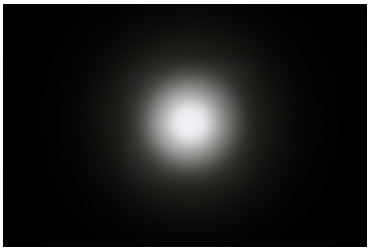

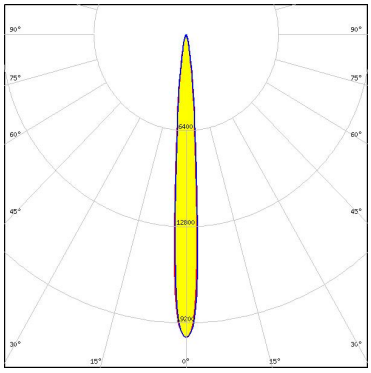

CREE

LED	XT-E
FWHM	10.0°
Efficiency	93 %
Peak intensity	15.600 cd/lm
Required components:	

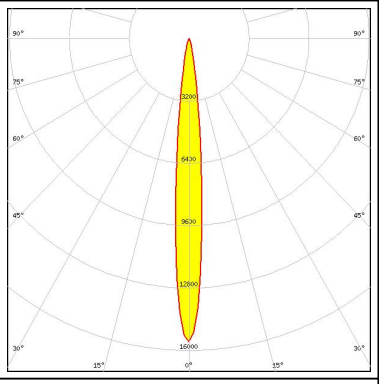

TOSHIBA
Leading Innovation

LED	TL1L4
FWHM	8.0°
Efficiency	94 %
Peak intensity	18.000 cd/lm
Required components:	

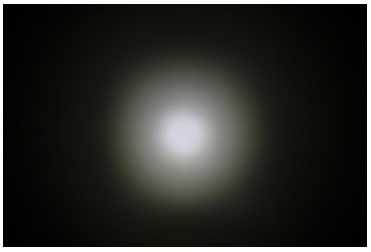

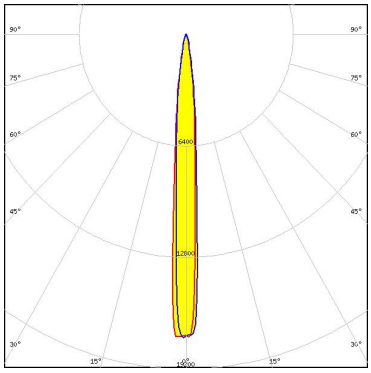

LEDiL is a registered trademark of LEDiL Oy in the European Union, USA, and certain other countries.

PHOTOMETRIC DATA (SIMULATED):

CREE

LED	XP-G2
FWHM	10.0°
Efficiency	93 %
Peak intensity	cd/lm

Required components:

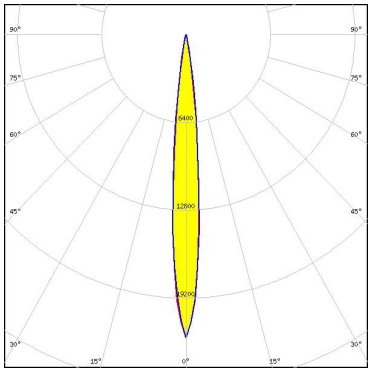

LEDiL is a registered trademark of LEDiL Oy in the European Union, USA, and certain other countries.

GENERAL INFORMATION:

NOTE: The typical beam angle will be changed by different color, chip size and chip position tolerance. The typical total beam angle is the full angle measured where the luminous intensity is half of the peak value.

MATERIALS:

As part of our continuous research and improvement processes, and to ensure the best possible quality and availability of our products, LEDiL reserves the right to change material grades without notice.

PRODUCT DATA USER AGREEMENT AND DISCLAIMER:

The measured data in the provided downloadable LEDiL Product Datasheets and Mechanical 2D-Drawings is rounded and provided as reference for planning. LEDiL Oy's optical specifications have been verified by conducting performance testing of the products in accordance with the company's quality system. The reported data are averaged results of multiple measurements with typical variation. LEDiL Oy reserves the right to without prior notification make changes and improvements to its products.

LEDiL Oy assumes neither warranty, nor guarantee nor any other liability of any kind for the contents and correctness of the provided data. The provided data has been generated with highest diligence but the provided data may in reality not represent the complete possible variation range of all intrinsic parameters. Therefore, in certain cases a deviation from the provided data could occur.

LEDiL Oy reserves the right to undertake technical changes of its products without further notification which could lead to changes in the provided data. LEDiL Oy assumes no liability of any kind for the possible deviation from any provided data or any other damage resulting from the usage of the provided data.

The user agrees to this disclaimer and user agreement with the download or usage of the provided files.

LEDiL Oy
Joensuunkatu 13
FI-24240 SALO
Finland

LEDiL Inc.
228 West Page Street
Suite D
Sycamore IL 60178
USA

Local sales and technical support
www.ledil.com/
where_to_buy

Shipping locations
Salo, Finland
Hong Kong, China

Distribution Partners
www.ledil.com/
where_to_buy

LEDiL is a registered trademark of LEDiL Oy in the European Union, USA, and certain other countries.