PRELIMINARY


**SOLID STATE DEVICES, INC.**

14005 Stage Road * Santa Fe Springs, Ca 90670
Phone: (562) 404-4474 * Fax: (562) 404-1773


# SPMQ496-01

## DESIGNER'S DATA SHEET

## 400 AMP/600 VOLTS IGBT POWER MODULE FOR SPACE APPLICATIONS

**FEATURES:**

- **High Current Switching for Motor Drives and Inverters for Space Applications.**
- **Push-Pull Configuration with Freewheeling Diodes.**
- **Low Saturation Voltage at High Currents.**
- **Low Mechanical Stress Design.**
- **Hermetic Sealed Construction for Aerospace Applications.**
- **Excellent Thermal Management.**
- **Full Power Screened Hermetic Discretes.**
- **TX, TXV, and S-Level Screening Available.**
- **Consult Factory for:**
  - **Faster Switching Speeds;**
  - **Other Bridge Configurations and Terminal Styles.**

**ASPM**

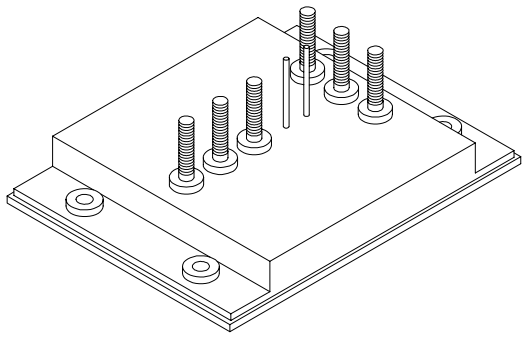

## MAXIMUM RATINGS

| CHARACTERISTIC | SYMBOL | VALUE | UNIT |
|---|---|---|---|
| **Collector to Emiter Voltage** | $V_{CES}$ | 600 | Volts |
| **Gate to Collector Voltage** | $V_{GES}$ | ±20 | Volts |
| **Continuous Collector Current** $T_B = 25^oC$<br>$T_B = 90^oC$ | $I_{C1}$<br>$I_{C2}$ | 400<br>200 | Amps |
| **Pulse Collector Current** 1/ | $I_{CM}$ | 600 | Amps |
| **Clamped Inductive Load Current**<br>($T_B$ = 125 °C, $V_{CC}$ = 480V, $V_{GE}$ = 15V, L = 30uH, $R_G$ = 10Ω | $I_{LM}$ | 200 | Amps |
| **Reverse Voltage Avalange Energy** 1/ ($I_C$ = 200A) | $E_{ARV}$ | 5.6 | mJ |
| **Operating and Storage Temperature** | $T_{OP}$ & $T_{STG}$ | -55 TO +150 | °C |
| **Thermal Resistance, Junction to Base** | $\Theta_{JB}$ | 0.14 | °C/W |
| **Total Module Dissipation** @$T_B = 25^oC$<br>**Dissipation Derating from $T_B = 25^oC$ to $T_B = 150^oC$** | $P_{D1}$<br>$P_{D2}$ | 1250<br>10 | W<br>W/°C |

1/ Pulse Duration Limited by $T_{JMAX}$; Repetative Rating

**ELECTRICAL SCHEMATIC**

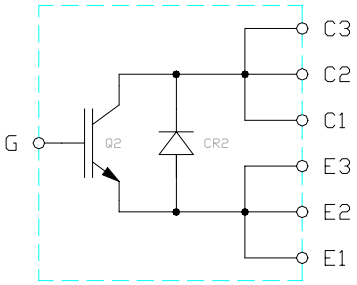


**NOTE:** All specifications are subject to change without notification. SCD's for these devices should be reviewed by SSDI prior to release.

**DATA SHEET #: PM0010A**

# SPMQ496-01

PRELIMINARY

**SOLID STATE DEVICES, INC.**
14005 Stage Road * Santa Fe Springs, Ca 90670
Phone: (562) 404-4474 * Fax: (562) 404-1773

## ELECTRICAL CHARACTERISTICS @ $T_J$ =25°C (Unless Otherwise Specified)

| RATING | | SYMBOL | MIN | MAX | UNIT |
|---|---|---|---|---|---|
| **Collector - Emitter Breakdown Voltage** ($I_{CES}$ = 250µA, $V_{GE}$ = 0V) | | $BV_{CES}$ | 600 | - | Volts |
| **Gate - Emitter Threshold Voltage** ($I_C$ = 5mA, $V_{CE}$ = $V_{GE}$) | | $V_{GE(th)}$ | 2.0 | 6 | Volts |
| **Collector-Emitter Saturation Voltage** ($I_C$ = 200A, $V_{GE}$ = 15V) | ($T_B$ = 25°C)<br>($T_B$ = 90°C) | $V_{CE(sat)2}$<br>$V_{CE(sat)1}$ | -<br>- | 3.1<br>2.5 | Volts |
| **Gate-Emitter Leakage Current** ($V_{GE}$ = ±20V, $V_{CE}$ = 0V) | | $I_{GES}$ | - | 2.0 | µAmps |
| **Collector Leakage Current** ($V_{CE}$ = 480V, $V_{GE}$ = 0V) | ($T_B$ = 25°C)<br>($T_B$ = 125°C) | $I_{CES1}$<br>$I_{CES1}$ | -<br>- | 225<br>20 | µAmps<br>mAmps |
| **Anti-Parallel Diode Forward Voltage** ($I_F$ = 200A, $T_B$ = 25°C) | | $V_F$ | - | 1.6 | Volts |
| **Insulation Resistance** (All terminals to Base @1500V) | | $R_{INSUL1}$ | 1 | - | GΩ |

## PACKAGE OUTLINE: ASPM

Tolerances
(Unless specified):
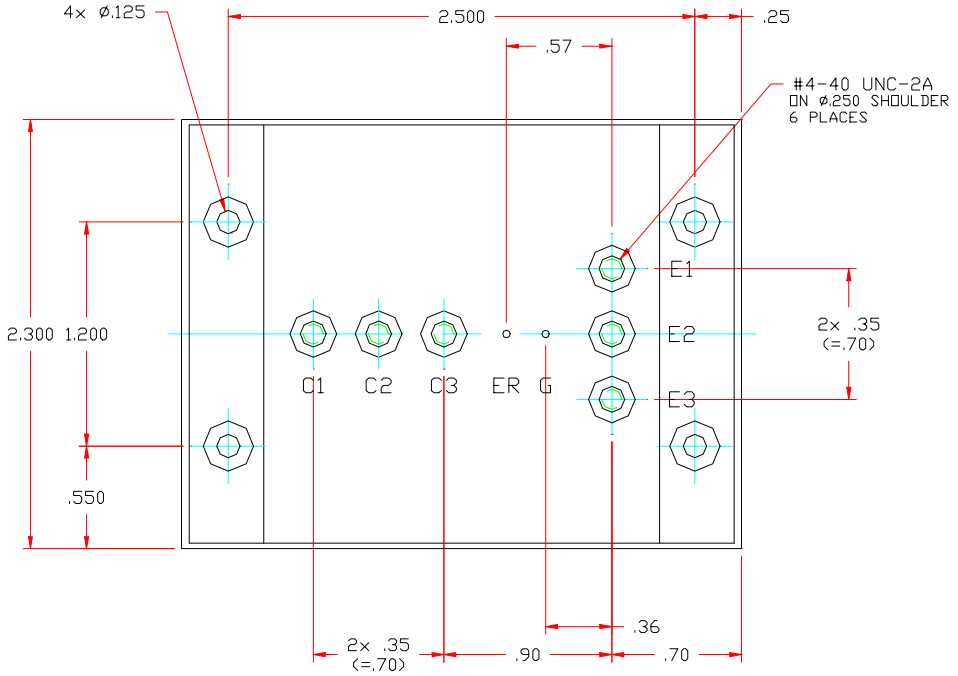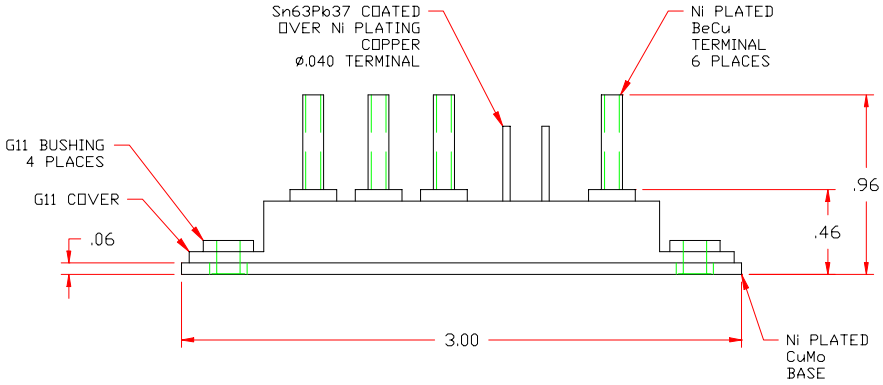
.XX ±.03
.XXX ±.010