PA48 / SMPA48

Cascadable Amplifier
1000 to 4000 MHz

Rev. V1

Features

- ULTRAWIDE BANDWIDTH: 0.8-4.2 GHz (TYP.)
- HIGH OUTPUT LEVEL: +24 dBm (TYP.)
- HIGH GAIN: 16.0 dB (TYP.)
- GaAs FET AMPLIFIER

Description

The PA48 power amplifier is a discrete hybrid design, which uses thin film manufacturing processes for accurate performance and high reliability.
This two stage GaAs FET feedback amplifier design displays impressive performance characteristics over a broadband frequency range.
Both TO-8 and Surface Mount packages are hermetically sealed, and MIL-STD-883 environmental screening is available.

Product Image

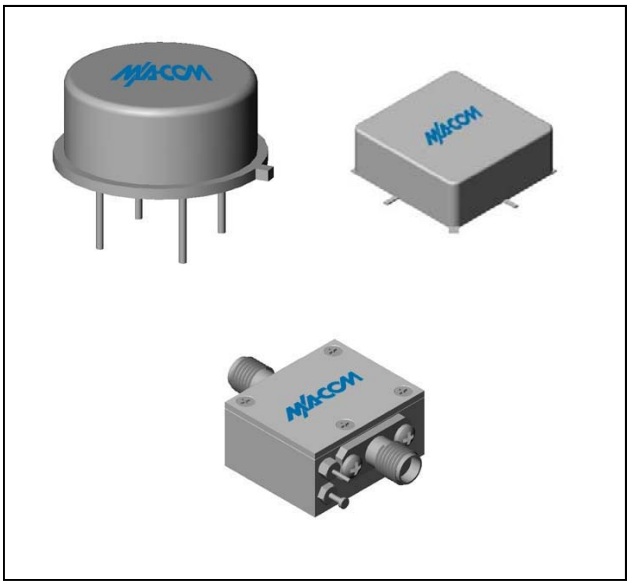

Ordering Information

Part Number	Package
PA48	TO-8B
SMPA48	Surface Mount
CPA48	SMA Connectorized

Electrical Specifications: Z_0 = 50Ω, V_{CC} = +15 V_{DC}

Parameter	Units	Typical	Guaranteed	
		25ºC	0º to 50ºC	-54º to +85ºC*
Frequency	GHz	0.8-4.2	1.0-4.0	1.0-4.0
Small Signal Gain (min)	dB	16.0	14.0	13.5
Gain Flatness (max)	dB	±0.4	±0.7	±0.8
Reverse Isolation	dB	33		
Noise Figure (max)	dB	5.5	7.0	7.5
Power Output @ 1 dB comp. (min)	dBm	24.0	22.5	21.5
IP3	dBm	+34		
IP2	dBm	+45		
Second Order Harmonic IP	dBm	+55		
VSWR Input / Output (max)		1.7:1 / 1.6:1	2.0:1 / 1.9:1	2.2:1 / 2.1:1
DC Current @ 15 Volts (max)	mA	225	235	245

* Over temperature performance limits for part number CPA48, guaranteed from 0°C to +50°C only.

Absolute Maximum Ratings

Parameter	Absolute Maximum
Storage Temperature	-62ºC to +125ºC
Case Temperature	+85ºC
DC Voltage	+16 V
Continuous Input Power	+17 dBm
Short Term Input power (1 minute max.)	100 mW
Peak Power (3 µsec max.)	0.25 W
"S" Series Burn-In Temperature (case)	+85ºC

Thermal Data: V_{CC} = +15 V_{DC}

Parameter	Rating
Thermal Resistance θ_{jc}	75ºC/W
Transistor Power Dissipation P_d	1.264W
Junction Temperature Rise Above Case T_{jc}	+95ºC

ADVANCED: Data Sheets contain information regarding a product M/A-COM Technology Solutions is considering for development. Performance is based on target specifications, simulated results, and/or prototype measurements. Commitment to develop is not guaranteed.
PRELIMINARY: Data Sheets contain information regarding a product M/A-COM Technology Solutions has under development. Performance is based on engineering tests. Specifications are typical. Mechanical outline has been fixed. Engineering samples and/or test data may be available. Commitment to produce in volume is not guaranteed.

- **North America** Tel: 800.366.2266 / Fax: 978.366.2266
- **Europe** Tel: 44.1908.574.200 / Fax: 44.1908.574.300
- **Asia/Pacific** Tel: 81.44.844.8296 / Fax: 81.44.844.8298

Visit www.macomtech.com for additional data sheets and product information.

M/A-COM Technology Solutions Inc. and its affiliates reserve the right to make changes to the product(s) or information contained herein without notice.

Cascadable Amplifier
1000 to 4000 MHz

Rev. V1

Typical Performance Curves at +25°C

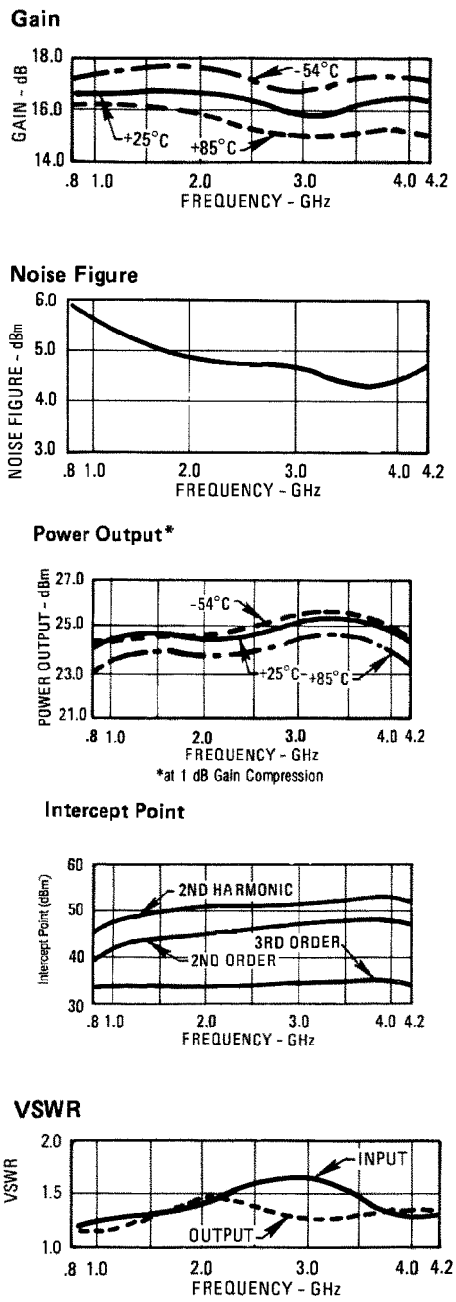

Outline Drawing: TO-8B *

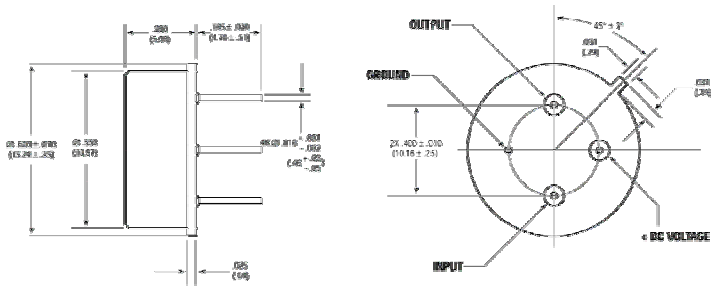

WEIGHT: 2 grams (0.07 oz.) max

Outline Drawing: Surface Mount *

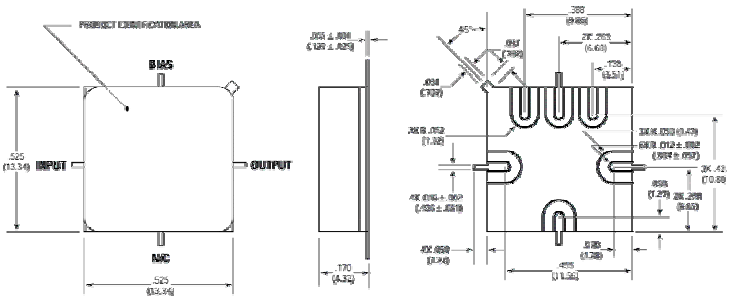

WEIGHT: 2 grams (0.07 oz.) max

Outline Drawing: SMA Connectorized *

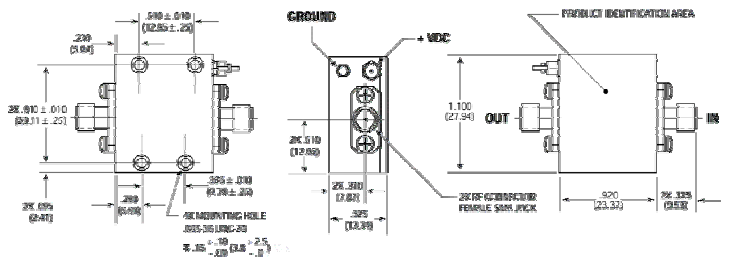

WEIGHT: 23 grams (0.81 oz.) max

* Dimensions are inches (millimeters) ±0.015 (0.38) unless otherwise specified.

ADVANCED: Data Sheets contain information regarding a product M/A-COM Technology Solutions is considering for development. Performance is based on target specifications, simulated results, and/or prototype measurements. Commitment to develop is not guaranteed.
PRELIMINARY: Data Sheets contain information regarding a product M/A-COM Technology Solutions has under development. Performance is based on engineering tests. Specifications are typical. Mechanical outline has been fixed. Engineering samples and/or test data may be available. Commitment to produce in volume is not guaranteed.

- **North America** Tel: 800.366.2266 / Fax: 978.366.2266
- **Europe** Tel: 44.1908.574.200 / Fax: 44.1908.574.300
- **Asia/Pacific** Tel: 81.44.844.8296 / Fax: 81.44.844.8298

Visit www.macomtech.com for additional data sheets and product information.

M/A-COM Technology Solutions Inc. and its affiliates reserve the right to make changes to the product(s) or information contained herein without notice.