RoHS Compliant
Directive 2011/65/EU

SPECIFICATION

Customer:

Item: Crystal Unit

Type: NX5032GA

Frequency 8.000 MHz

Customer's Spec. No.:

NDK Spec. No.: STD-CSU-1

Receipt

Charge:

Sales		
Engineer	1st Eng. Dept. K.Nakashima	Tel. (81)-4-2900-6631

Approved H.Kobayashi

Checked ---

Drawn K.Nakashima

Revision Record

Rev.	Rev. Date	Items	Contents	Remarks
---	16. Apr. 2013	Issue	---	---

NIHON DEMPA KOGYO CO., LTD.

1.Customer specifications number :
2.NDK specification number : STD-CSU-1
3.Type : NX5032GA

4.Electrical characteristics

4.1 Nominal frequency	: 8.000 MHz
4.2 Overtone order	: Fundamental
4.3 Frequency tolerance	: $\pm 50\times10^{-6}$max. (+25 °C)
4.4 Frequency versus temperature characteristics	: $\pm 150\times10^{-6}$max. (-40~+150 °C) The reference temperature shall be 25°C
4.5 Equivalent resistance	: 300Ωmax.
4.6 Maximum level of drive	: 500μWmax.
4.7 Insulation resistance	: Terminal to terminal insulation resistance also terminal to cover insulation resistance must be 500MΩ (min) when DC100V ±15V is applied.

5. Measurement circuit

5.1 Frequency measurement

*Measuring instrument	: π-Network
* Load capacitance(C_L)	: 8pF
*Level of drive	: 10μW

5.2 Equivalent resistance measurement

* Measuring instrument	: π-Network
* Load capacitance(C_L)	: Series
*Level of drive	: 10μW

6. Other performances

6.1 Storage temperature range	: -40~+150°C
6.2 Air-tightness	: Less than 3×10^{-9}Pa m^3/s (Helium leak detector)

7. Examination results document

Since a performance is guaranteed, an examination results document does not submit.

8. Application drawing

8.1 External dimension	: EXD14B-00016
8.2 Taping and reel figure	: EXK17B-00027
8.3 Holder marking	: EXH11B-00142
8.4 Reliability assurance Item	: EXS30B-00396
8.5 Recommendation reflow profile	: EXS30B-00344

9. Notice

9.1. Order items are manufactured according to specification. As to conditions, which are not indicated in this specification and unpredictable such as applied condition and oscillation margin, please check them beforehand.

9.2. Crystal units will be damaged by ultrasonic welding process due to resonance of crystal wafer itself. NDK does not recommend using ultrasonic welding. If Ultra Sonic welding used, NDK strongly recommend verifying crystal unit damage by ultrasonic weld.

9.3.Unless we receive request for modification within 3 weeks from the issue date of this NDK specification sheet, we will supply products according to this specification. Also, if you'd like to modify specification of order, which has been placed with delivery request within 3 weeks from the issue data of this specification sheet, we would like to discuss with you separately.

9.4. In no event shall the company be liable for any product failure resulting from an inappropriate handling or operation of the product beyond the scope of its guarantee.

9.5. Where any change to the process condition is made due to the change(s) in the production line, inform personnel of the specifications.

9.6. Should this specification data give rise to any disputes relating to any intellectual property rights or any other rights of a third person, the company shall not indemnify anyone for any damage. Their disclosure must not be construed as the grant of a license to use any of the intellectual property rights owned by the company.

9.7. If you intend to use products listed on this specification for applications that may result in loss of life or assets (controls relating to safety, medical equipment, aeronautical equipment, space equipment, etc.), please do not fail to advise us of your intention beforehand.

9.8. In the company's production process whatever amount of ozone depleting substances (ODS) as specified in the Montreal protocol is not used.

9.9. Information contained in this specification must not be quoted, reproduced or used for other purposes including processing either in part or in full without obtaining prior approval from the company.

9.10. The appearance color has a different case by purchasing it more than 2 suppliers of the component, but characteristic and reliability are guaranteed.

10. Prohibited items

Be sure to use the product under the following conditions. Otherwise, the characteristics deterioration or destruction of the product may result.

(1)Reflow soldering heat resistance

Peak temperature: 265°C, 10 sec

Heating: 230°C or higher, 40 sec

Preheating: 150°C to 180°C, 120 sec

Reflow passage times: twice

(2)Manual soldering heat resistance

Pressing a soldering iron of 400°C on the terminal electrode for four seconds (twice).

When using a soldering iron, press its tip on the part below the sealed part, avoiding the glass-sealed part (otherwise, the glass will melt and air-tightness may be lost).

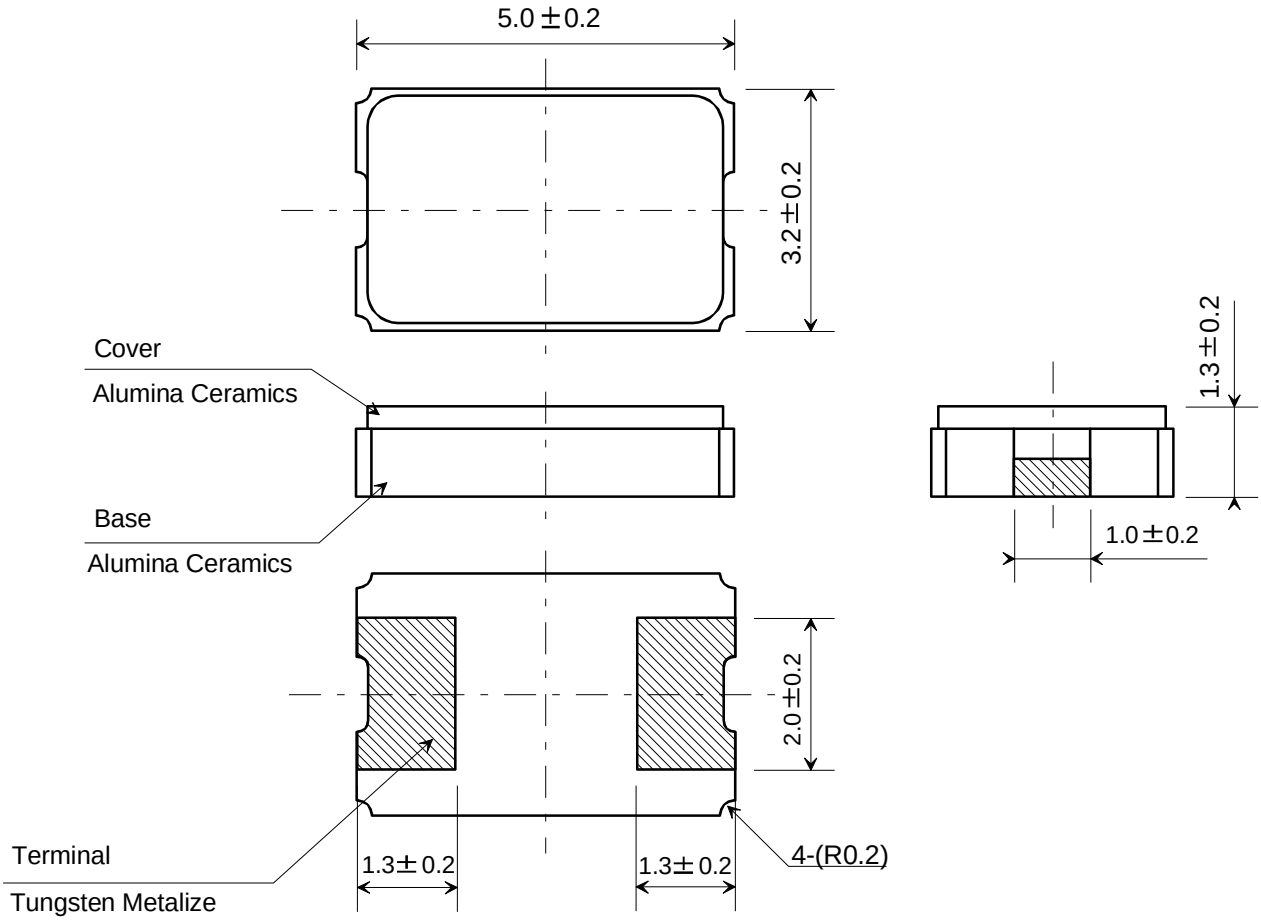

REFERRENCE LAND PATTERN (TYPICAL)

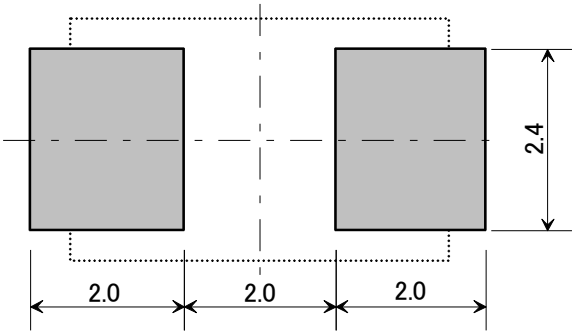

PIN CONNECTION [TOP VIEW]

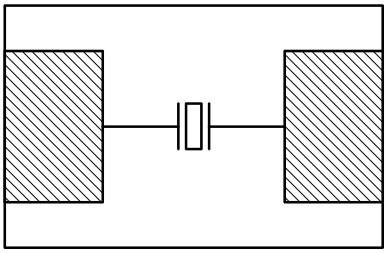

	Date of Revise	Charge	Approved	Reason
E	15.Sep.2006	N.Yamamoto	K.Kubota	Change reference land pattern size

	Date	Name	Third Angle Projection	Tolerance	Scale
Drawn	19.Mar.1999	Y.Morizumi	Dimension:mm		/
Designed	19.Mar.1999	Y.Morizumi	Title	Drawing No.	Rev.
Checked	19.Mar.1999	M.Miura	**NX5032GA External Dimension**	**EXD14B-00016**	E
Approved	19.Mar.1999	M.Okamoto			

NIHON DEMPA KOGYO CO., LTD.

Form M-1

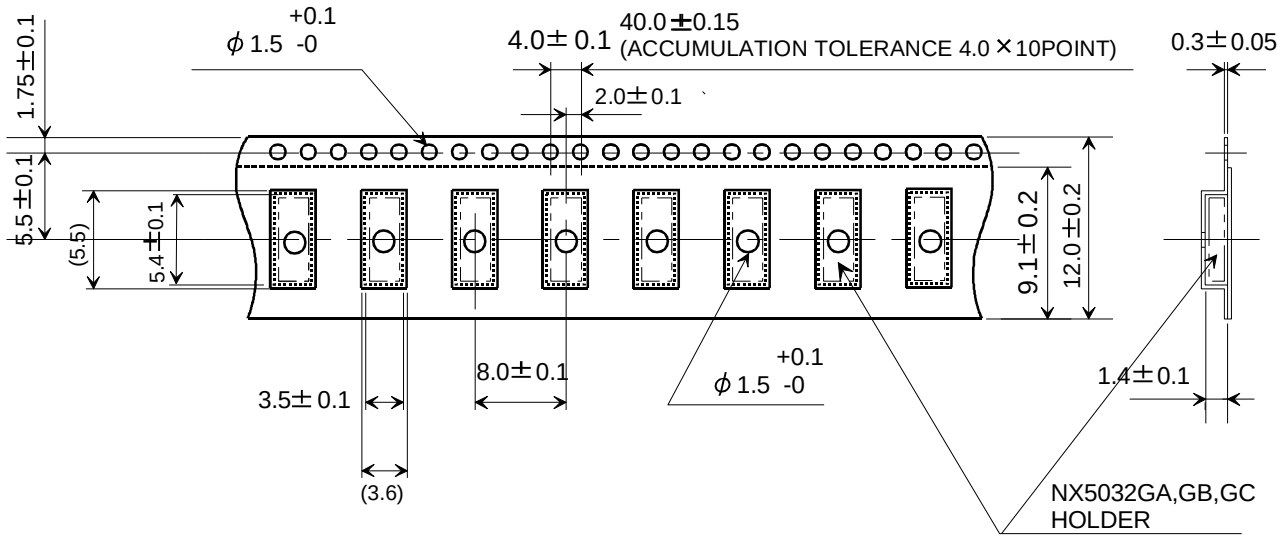

TAPING

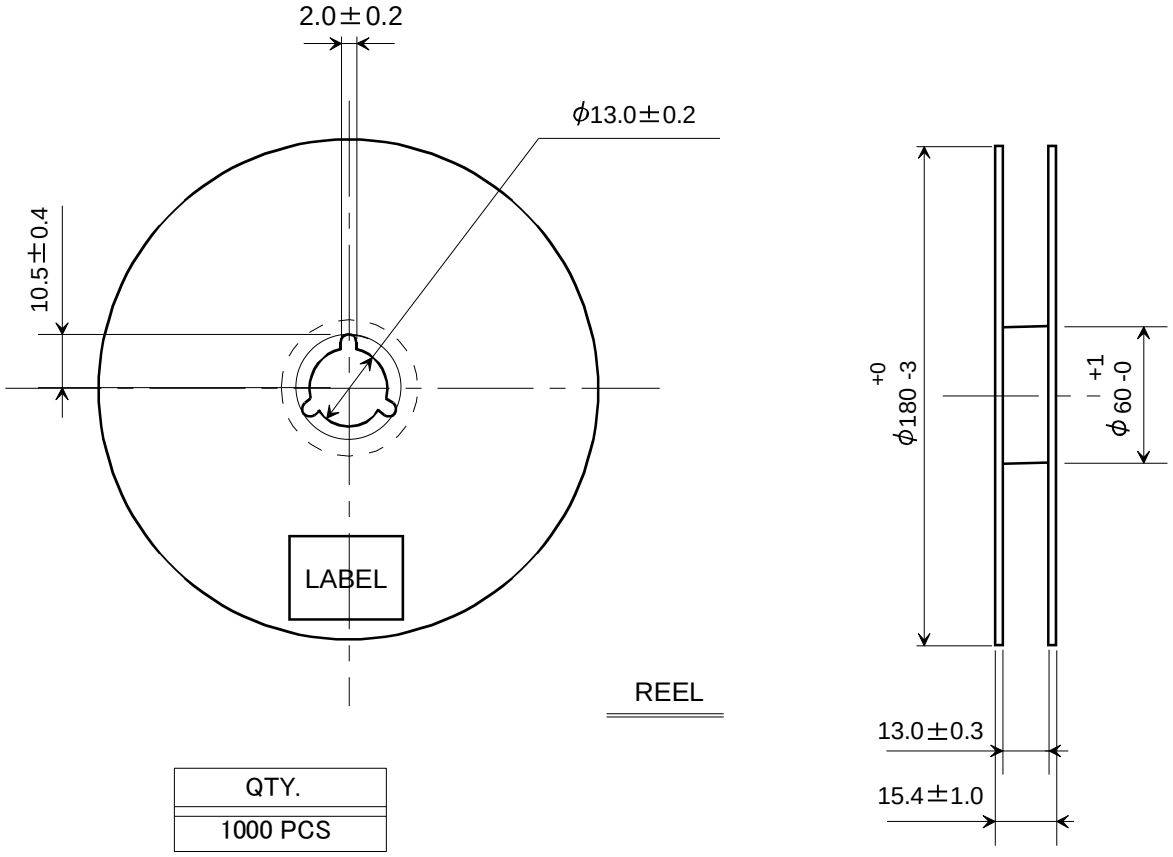

REEL

QTY.
1000 PCS

	Date of Revise	Charge	Approved	Reason
C	19.Dec.2008	K.Oguri	K.Miyashita	Addition of NX5032GB, GC

	Date	Name	Third Angle Projection	Tolerance	Scale
Drawn	13.Jul.1999	Y.Morizumi	Dimension:mm		/
Designed	13.Jul.1999	Y.Morizumi	Title	Drawing No.	Rev.
Checked	----------	----------	**Crystal Holder Packing**	**EXK17B-00027**	C
Approved	13.Jul.1999	M.Okamoto			

NIHON DEMPA KOGYO CO., LTD.

Form M-1

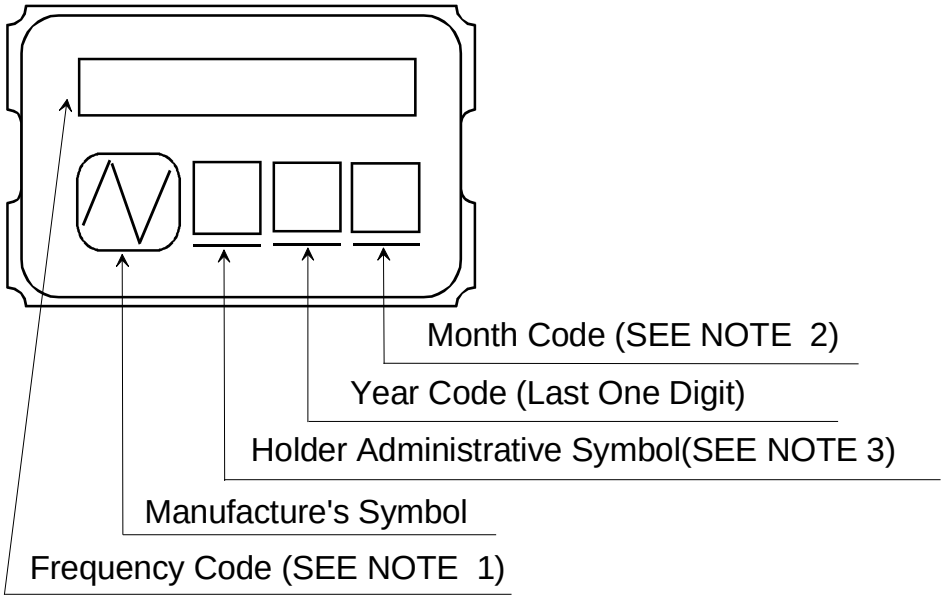

NOTE

1. Frequency Code

Marking Frequency is consist of five digits, first five digits of Nominal Frequency

Example

Nominal Frequency	28.636363 MHz
Frequency Code	28.636

2. Month Code Table

Month	1 Jan.	2 Feb.	3 Mar.	4 Apr.	5 May.	6 Jun.	7 Jul.	8 Aug.	9 Sep.	10 Oct.	11 Nov.	12 Dec.
Month Code	1	2	3	4	5	6	7	8	9	X	Y	Z

3. Marking contents

Administrative symbol	S

*Marking digits are not include a decimal point and dot mark.

	Date of Revise	Charge	Approved	Reason
B	20.Sep.2005	N.Fukurai	K.Kubota	Change Representation

	Date	Name	Third Angle Projection	Tolerance	Scale
Drawn	16.Jul.2002	Y.Sakurai	Dimension:mm		/
Designed	16.Jul.2002	Y.Sakurai	Title	Drawing No.	Rev.
Checked	16.Jul.2002	M.Miura	**Crystal Holder Marking**	**EXH11B-00142**	B
Approved	16.Jul.2002	T.Ishii			

NIHON DEMPA KOGYO CO., LTD.

Form M-1

Reliability assurance item

(page: 1/2)

No.	Test item	Test methods	Spec. code
1	Drop	Devices are dropped from the height 75 cm onto iron plate. Execution 3 times random drops.	A
2	Shock	Acceleration: 49000 m/s^2 Duration: 0.15 ms Half-Sine pulse 1 Shocks in 6 mutually perpendicular planes, Total 6 shocks	A
3	Vibration	Frequency range: 10 to 2000 Hz Amplitude or Acceleration: 1.52 mm or 196 m/s^2 Sweep time: 20 min Test time: 4 h×3	A
4	Electrode adherent strength	See remark (1)	B
5	Solderability	Pre-heat temperature : 150 °C Pre-heat Time : 60 ~ 120 s Peak temperature : 240 ± 5 °C 215 °C Over time : 10 ~ 30 s	C
6	Resistance to soldering heat	Pre-heat temperature : 150 °C Pre-heat time : 60 ~ 120 s Test temperature : 260 ± 5 °C Test time : 10 ± 1 s	A,B
7	Resistance to cold	Leave at -40±2 °C for 1000 h	A
8	Resistance to heat	Leave at +150±2 °C for 1000 h	A
9	Humidity	Device are left in temperature at +85±2 °C with relative humidity of 80~85 % for 1000 h	A,D
10	Thermal shock	Device are left into the following temperature cycle as shown in (Figure1) for 1000 consecutive cycle. 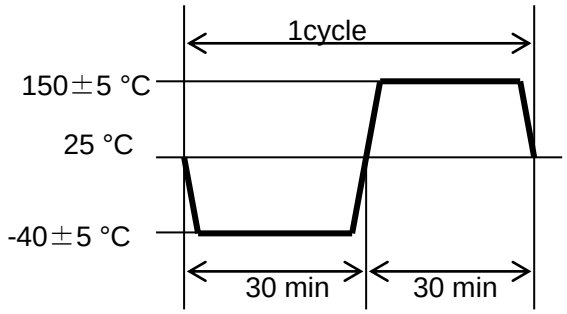 (Figure1)	A,B

Reliability assurance item

(page: 2/2)

Spec. code	Specification
A	Frequency tolerance and series resistance should be cleared.
B	After testing unless cracking of materials view of eyes and unless break of seal.
C	The leads shall acquire a new solder coat cover at 90 % of immersed area.
D	Insulation resistance shall be greater than 500 MΩ

Remark (1) Electrode adherent strength.

1) Test method condition

Using the solder, soldering Iron or reflow soldering bath shall be used for soldering on test fixture (Glass fiber epoxy laminate : Thickness 1.6mm+/-0.2mm) shown below.

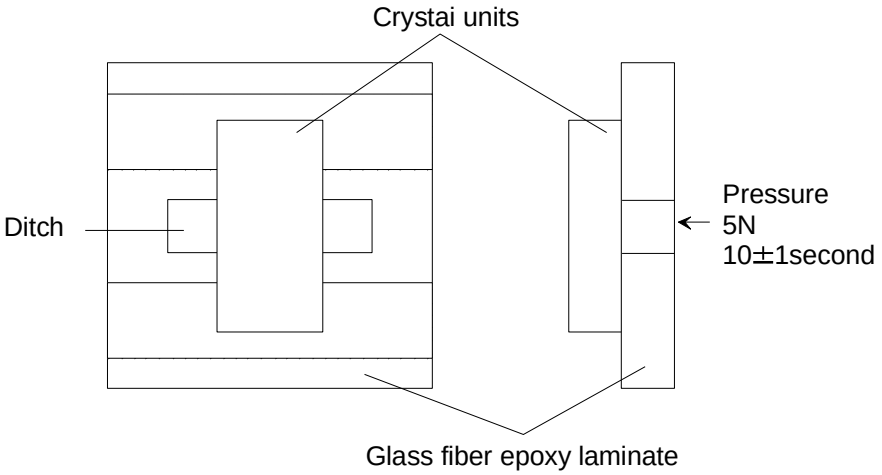

2) Specified value

No peel of electrode, no crack, no other abnormality

Recommendation reflow condition

1.IR reflow condition