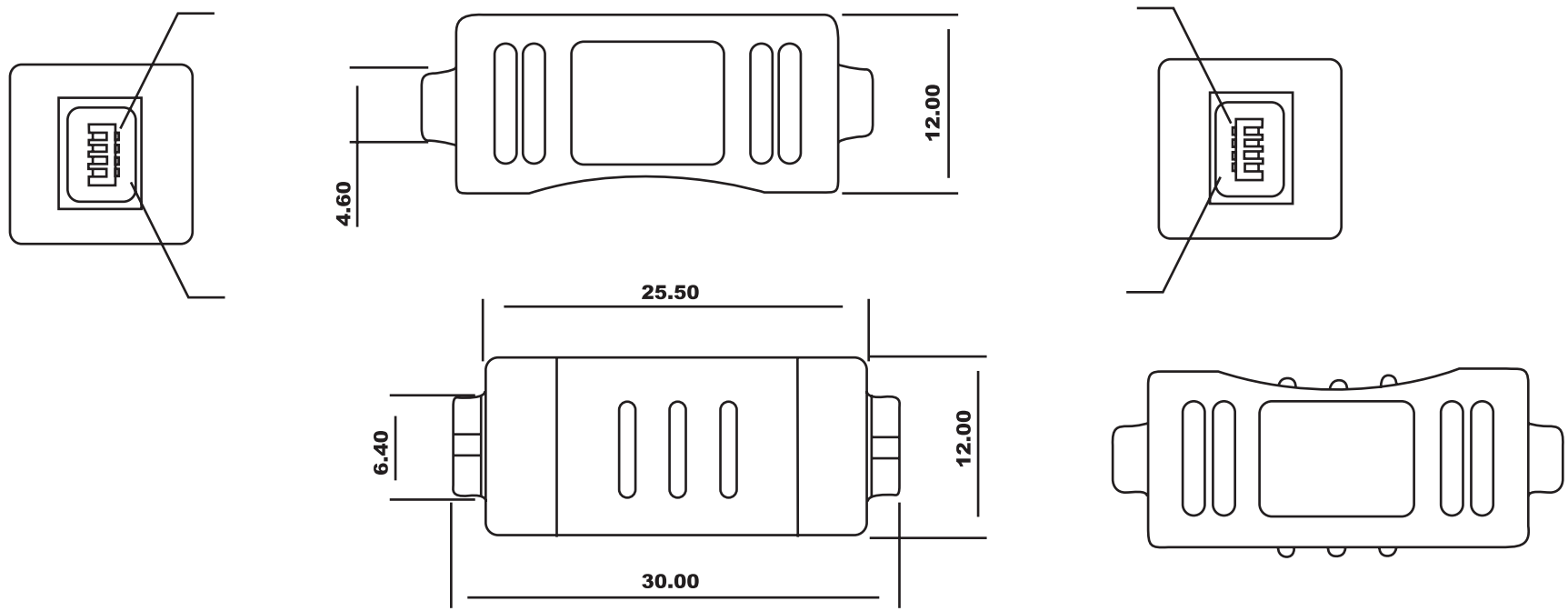

PIN Assignment

1394 4P Female	**1**	**2**	**3**	**4**	**Shell**
1394 4P Female	**1**	**2**	**3**	**4**	**Shell**

Electronic Test:

1.Open /Short/Intermitte:100%
2.Insulation Resistance:10M
3.Contact Resistance:100
4.The wires that were soldered in the PIN #1 and #2 of the 1394 4P Female are through the core.
5.Packing:See P-0039 Rev. C Packing Drawing
6.EAN Code: 4016032118039

RoHS Complaint

Scale	1:1
TOLERANCE	
X.X	±0.40
X.XX	±0.25
X.XXX	±0.15
Angle	±3°

Modification	Date	Name

		Name
Drawn	10.24.11	Chappell
Approved		

ASSMANN WSW components

Item No. **AB-1394-5-R**

Title IEEE 1394 Adaptor, 4 Pin Female - 4 Pin Female

Drawing No. **rev00**

Replace | Sheet