# EVAL5983

## 1.5 A step-down switching regulator demonstration board based on the L5983

**Data Brief**

## Features

- 1.5 A DC output current
- 2.9 V to 18 V input voltage
- Output voltage adjustable from 0.6 V to 16 V
- 250 kHz switching frequency, programmable up to 1 MHz
- Internal soft-start and inhibit
- Low dropout operation: 100 % duty cycle
- Zero-load current operation
- Over-current and thermal protection
- VFQFPN8 3 mm x 3 mm package

**EVAL5983**

## Description

The EVAL5983 demonstration board provides the design engineer with a fully functional step-down switching regulator with an output current of up to 1.5 A. The L5983 integrates STMicroelectronics step-down switching regulator, together with all the external components required for a typical application.

The rated voltage of the input capacitor and the Schottky diode rectifier repetitive peak reverse voltage are both 25 V, making the board capable of covering the entire 2.9 V - 18 V input voltage range of the L5983 device.

The board features an external resistor divider (R1 and R2) designed for an output voltage of 3.3 V.

The output voltage can be set to a level from 0.6 V up to the rated voltage of the output capacitor (16 V).

The compensation network on the demonstration board allows the use of MLCC as output filter to keep the loop stable. The inductor saturation current and forward current of the Schottky diode are within the current limit values.

The switching frequency on the demonstration board is set to 500 kHz by means of the R5 resistor connected to pin Fsw.



For further information contact your local STMicroelectronics sales office. www.st.com

# 1 EVAL5983 application circuit and component list

**Figure 1. Application circuit**

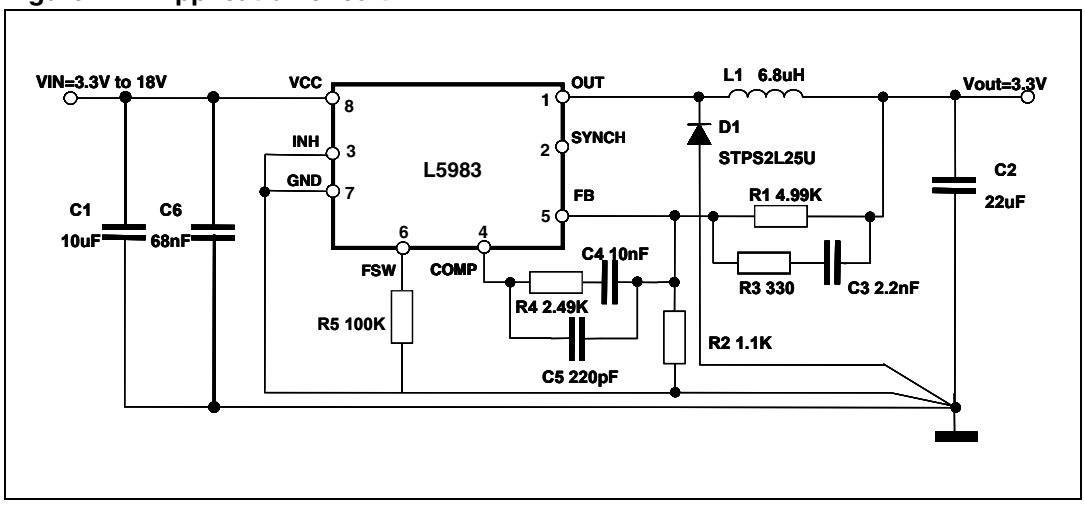


**Table 1. Component list**

| Reference | Part number | Description | Manufacturer |
|---|---|---|---|
| C1 | GRM31CR61E106KA12 | 10 µF, 25 V | MURATA |
| C2 | GRM31CR61C226KE15B | 22 µf, 16 V | MURATA |
| C3 | | 2.2 nF, 50 V | |
| C4 | | 10 nF, 50 V | |
| C5 | | 220 pF, 50 V | |
| C6 | | 68 nF, 25 V | |
| R1 | | 4.99 kΩ, 1 %, 0.1 W 0603 | |
| R2 | | 1.1 kΩ, 1 %, 0.1 W 0603 | |
| R3 | | 330 Ω, 1 %, 0.1 W 0603 | |
| R4 | | 2.99 kΩ, 1 %, 0.1 W 0603 | |
| R5 | | 100 kΩ, 1 %, 0.1 W 0603 | |
| L1 | 7447779006 | 6.8 uH, 30 %, 2.91 A | Coilcraft |
| D1 | STPS2L25V | 2 A, 2 5V | STMicroelectronics |

# 2 PCB layout

**Figure 2. PCB layout (component side)**

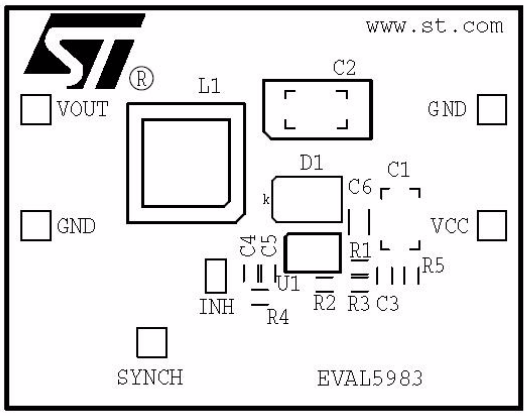


**Figure 3. PCB layout (bottom side)**

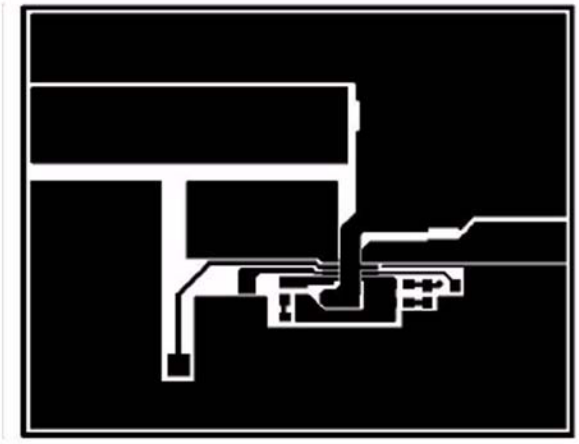

AM02113v1

**Figure 4. PCB layout (front side)**

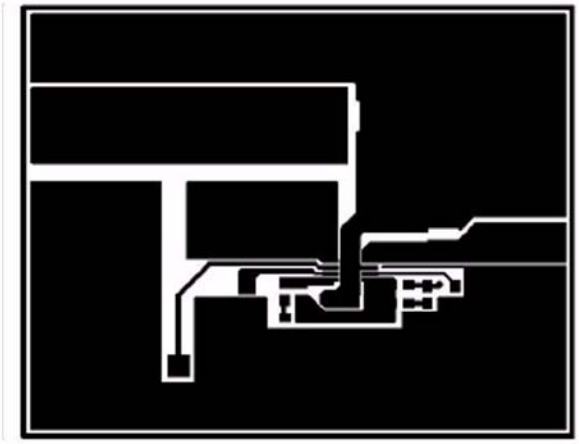

AM02113v1

# 3 Package mechanical data

In order to meet environmental requirements, ST offers these devices in different grades of ECOPACK® packages, depending on their level of environmental compliance. ECOPACK® specifications, grade definitions and product status are available at: www.st.com. ECOPACK® is an ST trademark.

# 4 Revision history

**Table 2. Document revision history**

| Date | Revision | Changes |
|---|---|---|
| 02-Mar-2009 | 1 | Initial release |

**Please Read Carefully:**

Information in this document is provided solely in connection with ST products. STMicroelectronics NV and its subsidiaries (“ST”) reserve the right to make changes, corrections, modifications or improvements, to this document, and the products and services described herein at any time, without notice.

All ST products are sold pursuant to ST’s terms and conditions of sale.

Purchasers are solely responsible for the choice, selection and use of the ST products and services described herein, and ST assumes no liability whatsoever relating to the choice, selection or use of the ST products and services described herein.

No license, express or implied, by estoppel or otherwise, to any intellectual property rights is granted under this document. If any part of this document refers to any third party products or services it shall not be deemed a license grant by ST for the use of such third party products or services, or any intellectual property contained therein or considered as a warranty covering the use in any manner whatsoever of such third party products or services or any intellectual property contained therein.

**UNLESS OTHERWISE SET FORTH IN ST’S TERMS AND CONDITIONS OF SALE ST DISCLAIMS ANY EXPRESS OR IMPLIED WARRANTY WITH RESPECT TO THE USE AND/OR SALE OF ST PRODUCTS INCLUDING WITHOUT LIMITATION IMPLIED WARRANTIES OF MERCHANTABILITY, FITNESS FOR A PARTICULAR PURPOSE (AND THEIR EQUIVALENTS UNDER THE LAWS OF ANY JURISDICTION), OR INFRINGEMENT OF ANY PATENT, COPYRIGHT OR OTHER INTELLECTUAL PROPERTY RIGHT.**

**UNLESS EXPRESSLY APPROVED IN WRITING BY AN AUTHORIZED ST REPRESENTATIVE, ST PRODUCTS ARE NOT RECOMMENDED, AUTHORIZED OR WARRANTED FOR USE IN MILITARY, AIR CRAFT, SPACE, LIFE SAVING, OR LIFE SUSTAINING APPLICATIONS, NOR IN PRODUCTS OR SYSTEMS WHERE FAILURE OR MALFUNCTION MAY RESULT IN PERSONAL INJURY, DEATH, OR SEVERE PROPERTY OR ENVIRONMENTAL DAMAGE. ST PRODUCTS WHICH ARE NOT SPECIFIED AS "AUTOMOTIVE GRADE" MAY ONLY BE USED IN AUTOMOTIVE APPLICATIONS AT USER’S OWN RISK.**

Resale of ST products with provisions different from the statements and/or technical features set forth in this document shall immediately void any warranty granted by ST for the ST product or service described herein and shall not create or extend in any manner whatsoever, any liability of ST.

ST and the ST logo are trademarks or registered trademarks of ST in various countries.

Information in this document supersedes and replaces all information previously supplied.

The ST logo is a registered trademark of STMicroelectronics. All other names are the property of their respective owners.

© 2009 STMicroelectronics - All rights reserved

STMicroelectronics group of companies

Australia - Belgium - Brazil - Canada - China - Czech Republic - Finland - France - Germany - Hong Kong - India - Israel - Italy - Japan - Malaysia - Malta - Morocco - Singapore - Spain - Sweden - Switzerland - United Kingdom - United States of America

**www.st.com**