AME

AME8826 1.55A CMOS LDO

■ General Description

The AME8826 family of positive, linear regulators feature low quiescent current (45µA typ.) with low dropout voltage, making them ideal for battery applications.

Output voltages are set at the factory and trimmed to 1.5% accuracy.

These rugged devices have both Thermal Shutdown, and Current Fold-back to prevent device failure under the "Worst" operating conditions.

In applications requiring a low noise, regulated supply, place a 1000pF capacitor between Bypass and Ground.

The AME8826 is stable with an output capacitance of 4.7µF or greater.

■ Features

- Very Low Dropout Voltage
- Guaranteed 1.55A Output
- Accurate to within 1.5%
- 45µA Quiescent Current Typically
- Over-Temperature Shutdown
- Current Limiting
- Noise Reduction Bypass Capacitor (Fixed Versions)
- Power-Saving Shutdown Mode
- Low Temperature Coefficient
- Adjustable Version
- All AME's Lead Free Products Meet RoHS Standards

■ Applications

- Instrumentation
- Portable Electronics
- Wireless Devices
- PC Peripherals
- Battery Powered Widgets

■ Functional Block Diagram

(Fixed Versions)

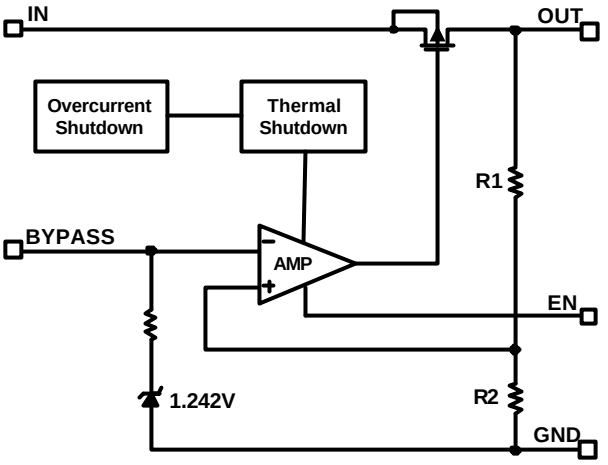

(Adjustable Version)

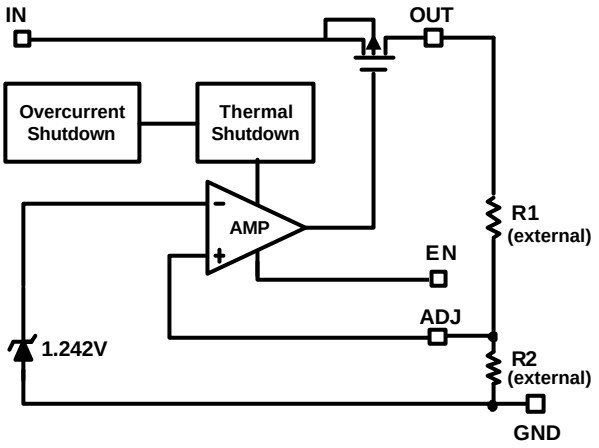

■ Typical Application

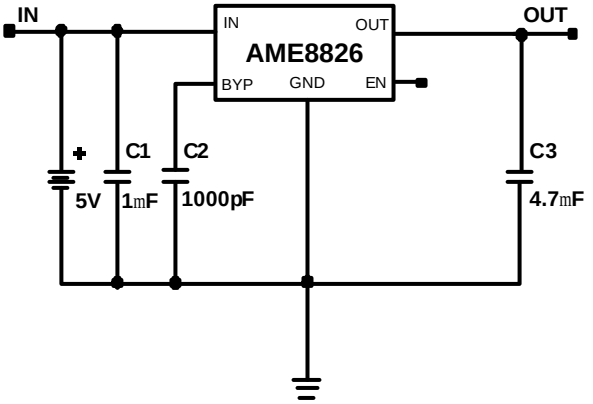

■ Pin Configuration

TO-263-5
Top View

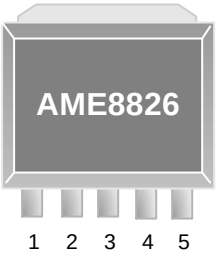

AME 8826AEDVxxx

1. EN
2. IN
3. GND(TAB)
4. OUT
5. BYP

*** Die Attach:**
Conductive Epoxy

TO-263-5
Top View

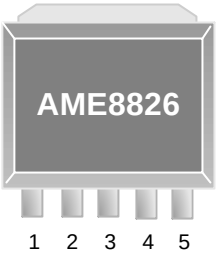

AME8826BEDVADJ

1. EN
2. IN
3. GND(TAB)
4. OUT
5. ADJ

*** Die Attach:**
Conductive Epoxy

SOP-8
Top View

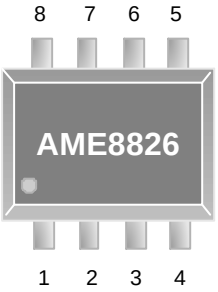

AME 8826AEHAxxx

1. BYP
2. GND
3. GND
4. EN
5. IN
6. GND
7. GND
8. OUT

*** Die Attach:**
Conductive Epoxy

SOP-8
Top View

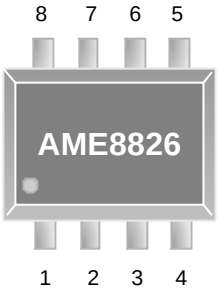

AME 8826BEHAADJ

1. ADJ
2. GND
3. GND
4. EN
5. IN
6. GND
7. GND
8. OUT

*** Die Attach:**
Conductive Epoxy

SOP-8
Top View

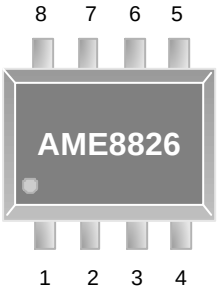

AME 8826CEHAADJ

1. EN
2. IN
3. OUT
4. ADJ
5. GND
6. GND
7. GND
8. GND

*** Die Attach:**
Conductive Epoxy

■ Pin Description

Pin Name	Pin Description
IN	Input voltage pin. It should be decoupled with 1µF or greater capacitor.
GND	Ground connection pin.
EN	Enable pin. When pulled low, the PMOS pass transistor turns off, current consuming less than 1µA.
BYP	Bypass capacitor connection. To improve AC ripple rejection, connect a 1000pF capacitor to GND. This will also provide a soft-start function.
OUT	LDO voltage regulator output pin. It should be decoupled with a 4.7µF or greater value low ESR ceramic capacitor.
ADJ	Feedback output voltage for adjustable device.

■ Ordering Information

AME8826 X X X X XXX X

- Special Feature
- Output Voltage
- Number of Pins
- Package Type
- Operating Temperature Range
- Pin Configuration

Pin Configuration	Operating Ambient Temperature Range	Package Type	Number of Pins	Output Voltage	Special Feature
A (TO-263-5) 1. EN 2. IN 3. GND 4. OUT 5. BYP B (TO-263-5) 1. EN 2. IN 3. GND 4. OUT 5. ADJ A (SOP-8) 1. BYP 2. GND 3. GND 4. EN 5. IN 6. GND 7. GND 8. OUT B (SOP-8) 1. ADJ 2. GND 3. GND 4. EN 5. IN 6. GND 7. GND 8. OUT C (SOP-8) 1. EN 2. IN 3. OUT 4. ADJ 5. GND 6. GND 7. GND 8. GND	E: $-40^{O}C$ to $+85^{O}C$	D: TO-263 H: SOP	A: 8 V: 5	ADJ: Adjustable 150: V=1.5V 180: V=1.8V 250: V=2.5V 330: V=3.3V 475: V=4.75V 500: V=5.0V	Z: Lead free

■ Ordering Information (contd.)

Part Number	Marking*	Output Voltage	Package	Operating Ambient Temperature Range
AME8826AEDV150	AME8826 AEDV150 yyww	1.50	TO-263-5	- 40°C to +85°C
AME8826AEDV150Z	AME8826 AEDV150 yyww	1.50	TO-263-5	- 40°C to +85°C
AME8826AEDV180	AME8826 AEDV180 yyww	1.80	TO-263-5	- 40°C to +85°C
AME8826AEDV180Z	AME8826 AEDV180 yyww	1.80	TO-263-5	- 40°C to +85°C
AME8826AEDV250Z	AME8826 AEDV250 yyww	2.50	TO-263-5	- 40°C to +85°C
AME8826AEDV330Z	AME8826 AEDV330 yyww	3.30	TO-263-5	- 40°C to +85°C
AME8826AEDV475Z	AME8826 AEDV475 yyww	4.75	TO-263-5	- 40°C to +85°C
AME8826AEDV500Z	AME8826 AEDV500 yyww	5.00	TO-263-5	- 40°C to +85°C
AME8826BEDVADJ	AME8826 BEDVADJ yyww	ADJ	TO-263-5	- 40°C to +85°C
AME8826BEDVADJZ	AME8826 BEDVADJ yyww	ADJ	TO-263-5	- 40°C to +85°C

Note: yyww represents the date code

* A line on top of the first letter represents lead free plating such as $\bar{A}$ME8826

Please consult AME sales office or authorized Rep./Distributor for output voltage and package type availability.

■ Ordering Information

Part Number	Marking*	Output Voltage	Package	Operating Ambient Temperature Range
AME8826AEHA150Z	AME8826 AEHA150 yyww	1.50	SOP-8	- 40°C to +85°C
AME8826AEHA180Z	AME8826 AEHA180 yyww	1.80	SOP-8	- 40°C to +85°C
AME8826AEHA250Z	AME8826 AEHA250 yyww	2.50	SOP-8	- 40°C to +85°C
AME8826AEHA330Z	AME8826 AEHA330 yyww	3.30	SOP-8	- 40°C to +85°C
AME8826AEHA475Z	AME8826 AEHA475 yyww	4.75	SOP-8	- 40°C to +85°C
AME8826AEHA500Z	AME8826 AEHA500 yyww	5.00	SOP-8	- 40°C to +85°C
AME8826BEHAADJZ	AME8826 BEHAADJ yyww	ADJ	SOP-8	- 40°C to +85°C
AME8826CEHAADJ	AME8826 CEHAADJ yyww	ADJ	SOP-8	- 40°C to +85°C
AME8826CEHAADJZ	AME8826 CEHAADJ yyww	ADJ	SOP-8	- 40°C to +85°C

■ Absolute Maximum Ratings

Parameter	Maximum	Unit
Input Voltage	-0.3 to +8	V
EN, BYP Voltage	-0.3 to +8	V
Output Voltage	-0.3 to V_{IN} + 0.3	V
Output Current	P_D / (V_{IN} - V_{OUT})	mA
ESD Classification	B*	

Caution: Stress above the listed absolute maximum rating may cause permanent damage to the device.
* HBM B:2000V~3999V

■ Recommended Operating Conditions

Parameter	Symbol	Rating	Unit
Ambient Temperature Range	T_A	- 40 to +85	^oC
Junction Temperature Range	T_J	- 40 to +125	^oC
Storage Temperature Range	T_{STG}	- 65 to +150	^oC

■ Thermal Information

Parameter	Package	Die Attach	Symbol	Maximum	Unit
Thermal Resistance (Junction to Case)	*TO-263-5	Conductive Epoxy	θ_{JC}	5	^oC / W
	**SOP-8			60	
Thermal Resistance (Junction to Ambient)	TO-263-5		θ_{JA}	80	
	SOP-8			150	
Internal Power Dissipation	TO-263-5		P_D	1700	mW
	SOP-8			810	
Maximum Junction Temperature				150	^oC
Solder Iron(10 Sec)***				350	^oC

* Measure θ_{JC} on backside center of tab.
** Measure θ_{JC} on center of molding compound if IC has no tab.
*** MIL-STD-202G210F

■ Electrical Specifications

T_A = 25°C unless otherwise noted

Parameter	Symbol	Test Condition		Min	Typ	Max	Units
Input Voltage	V_{IN}			Note 1		7	V
Output Voltage Accuracy	V_O	I_O=1mA		-1.5		1.5	%
Dropout Voltage	$V_{DROPOUT}$	I_O=1.55A V_O=$V_{O(NOM)}$ -2.0%	1.5V<=$V_{O(NOM)}$<=2.0V		See chart	1000	mV
			2.0V<$V_{O(NOM)}$<=2.8V			800	
			2.8V<$V_{O(NOM)}$<3.8V			600	
Output Current	I_O	V_O>1.2V		1550			mA
Current Limit	I_{LIM}	V_O>1.2V		1550	2000		mA
Quiescent Current (For Fixed Output Voltage Options)	I_Q	I_O=0mA			45	70	µA
Ground Pin Current	I_{GND}	I_O=1mA to 1.5A			45		µA
Line Regulation	REG_{LINE}	I_O=1mA V_{IN}=V_O+1 to V_O+2	V_O < 2.0V			0.15	%
			V_O >= 2.0V		0.02	0.1	%
Load Regulation	REG_{LOAD}	I_O=1mA to 1.5A			0.2	1	%
Over Temerature Shutdown	OTS				150		°C
Over Temerature Hysterisis	OTH				30		°C
V_O Temperature Coefficient	TC				30		ppm/°C
ADJ Input Bias Current	I_{ADJ}				1		µA
ADJ Reference Voltage	V_{REF}			1.223	1.242	1.261	V
Power Supply Rejection	PSRR	I_O=100mA C_O=4.7µF ceramic	f=1kHz		50		dB
			f=10kHz		20		
			f=100kHz		15		
Power Supply Rejection	PSRR	I_O=100mA C_O=4.7µF ceramic C_{BYP}=0.01µF	f=1kHz		75		dB
			f=10kHz		55		
			f=100kHz		30		
Output Voltage Noise	eN	f=10Hz to 100kHz I_O=10mA,C_{BYP}=0µF	Co=4.7µF		30		µVrms
Output Voltage Noise	eN	f=10Hz to 100kHz I_O=10mA,C_{BYP}=0.01µF	Co=4.7µF		30		µVrms
EN Input Threshold	V_{EH}	V_{IN}=2.7V to 7V		2.0		V_{IN}	V
	V_{EL}	V_{IN}=2.7V to 7V		0		0.4	V
EN Input Bias Current	I_{EH}	V_{EN}=V_{IN}, V_{IN}=2.7V to 7V				0.1	µA
	I_{EL}	V_{EN}=0V, V_{IN}=2.7V to 7V				0.5	µA
Shutdown Supply Current	I_{SD}	V_{IN}=5.0V, V_O=0V, V_{EN}<V_{EL}			30		µA
		V_{IN}=2.5V, V_O=0V, V_{EN}<V_{EL}			0.5	2	µA

Note1:$V_{IN(min)}$=V_{OUT}+$V_{DROPOUT}$

■ Detailed Description

The AME8826 family of CMOS regulators contain a PMOS pass transistor, voltage reference, error amplifier, over-current protection, and thermal shutdown.

The P-channel pass transistor receives data from the error amplifier, over-current shutdown, and thermal protection circuits. During normal operation, the error amplifier compares the output voltage to a precision reference. Over-current and Thermal shutdown circuits become active when the junction temperature exceeds 140°C, or the current exceeds 2.2A. During thermal shutdown, the output voltage remains low. Normal operation is restored when the junction temperature drops below 120°C.

■ External Capacitors

The AME8826 is stable with an output capacitor to ground of 4.7µF or greater. Ceramic capacitors have the lowest ESR, and will offer the best AC performance. Conversely, Aluminum Electrolytic capacitors exhibit the highest ESR, resulting in the poorest AC response. Unfortunately, large value ceramic capacitors are comparatively expensive. One option is to parallel a 0.1µF ceramic capacitor with a 10µF Aluminum Electrolytic. The benefit is low ESR, high capacitance, and low overall cost.

A second capacitor is recommended between the input and ground to stabilize Vin. The input capacitor should be at least 0.1µF to have a beneficial effect.

A third capacitor can be connected between the BYPASS pin and GND. This capacitor can be a low cost Polyester Film variety between the value of 0.001 ~ 0.01µF. A larger capacitor improves the AC ripple rejection, but also makes the output come up slowly. This "Soft" turn-on is desirable in some applications to limit turn-on surges.

All capacitors should be placed in close proximity to the pins. A "Quiet" ground termination is desirable. This can be achieved with a "Star" connection.

■ Enable

When pulled low, the PMOS pass transistor shuts off, and all internal circuits are powered down. In this state, the quiescent current is less than 1µA. This pin behaves much like an electronic switch.

■ Adjustable Version

The adjustable version uses external feedback resistors to generate an output voltage anywhere from 1.5V to 5.0V. Vadj is trimmed to 1.242V and VOUT is given by the equation:

$$VOUT = Vadj (1 + R1 / R2)$$

Feedback resistors R1 and R2 should be high enough to keep quiescent current low, but increasing R1 + R2 will reduce stability. In general, R1 and R2 in the 10's of kΩ will produce adequate stability, given reasonable layout precautions. To improve stability characteristics, keep parasitics on the ADJ pin to a minimum, and lower R1 and R2 values.

Dropout Voltage VS I_{LOAD}

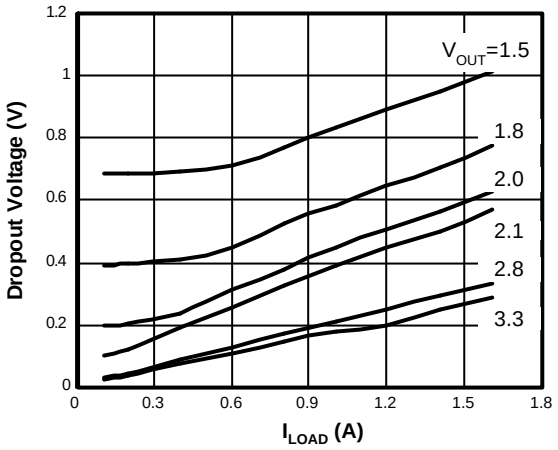

Dropout Voltage VS V_{OUT}

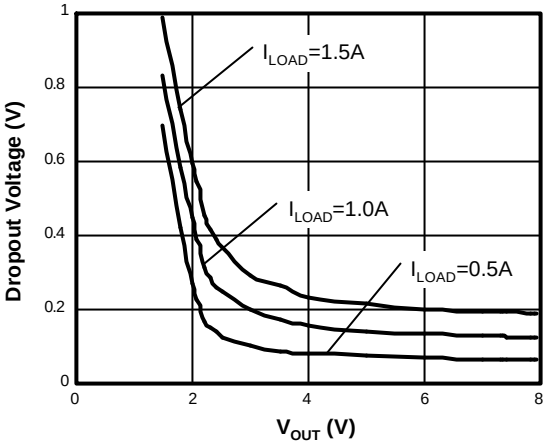

Quiescent Current vs. Temperature

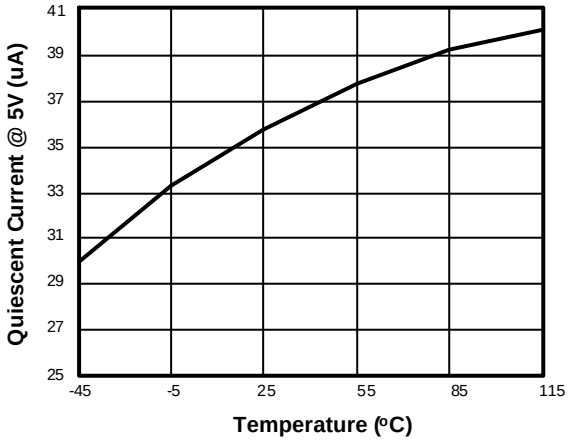

Ground Current vs. V_{IN}

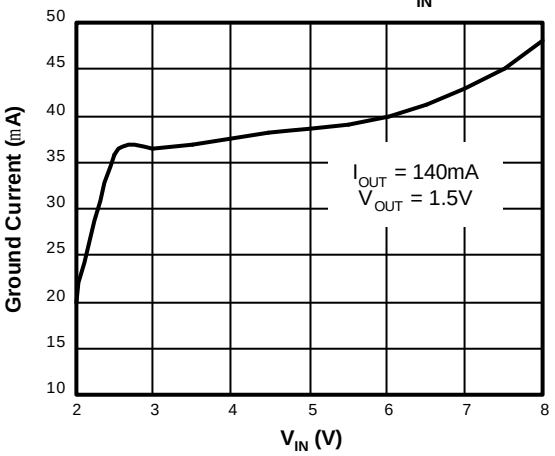

Ground Current vs. Load Current

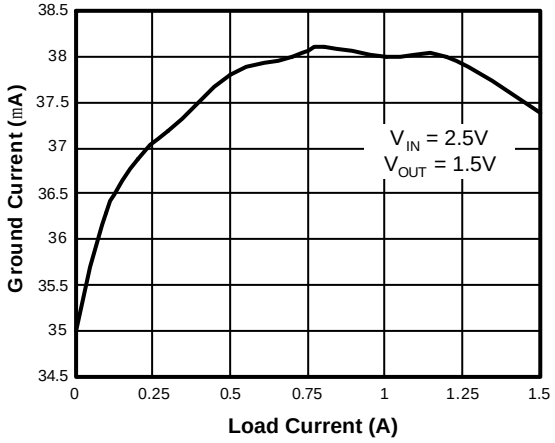

Current Limit vs. V_{IN}

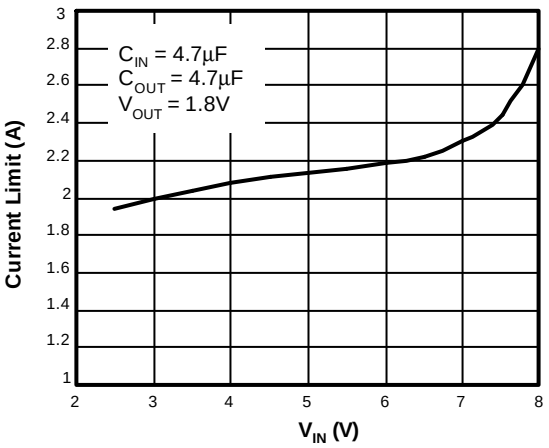

Load Regulation vs. Temperature

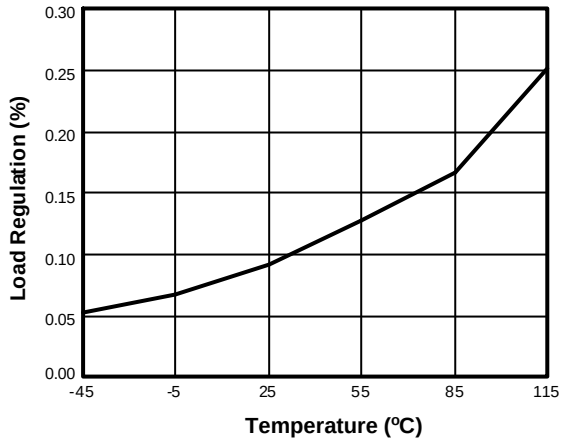

Dropout Voltage vs. Load Current(2.5V)

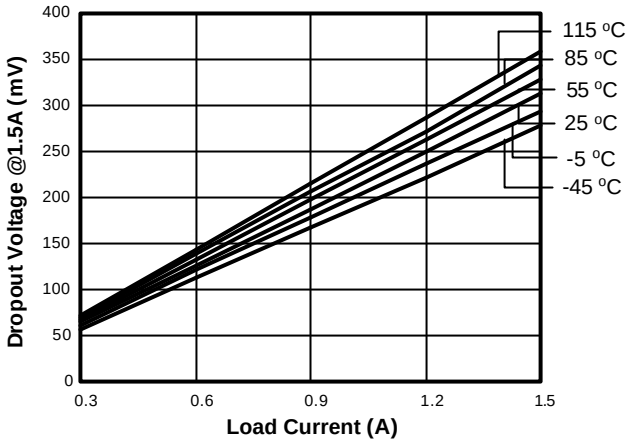

AME8826CEHAADJ vs. Temperature

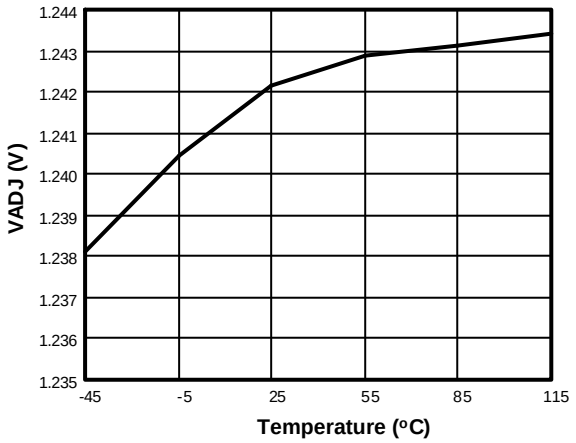

Line Transient Response

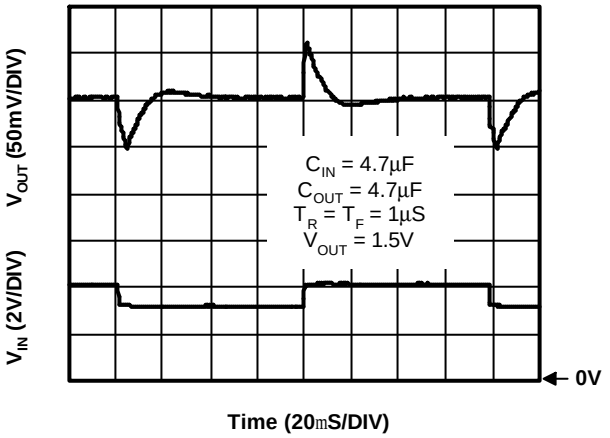

Load Step 40mA to 1.5A

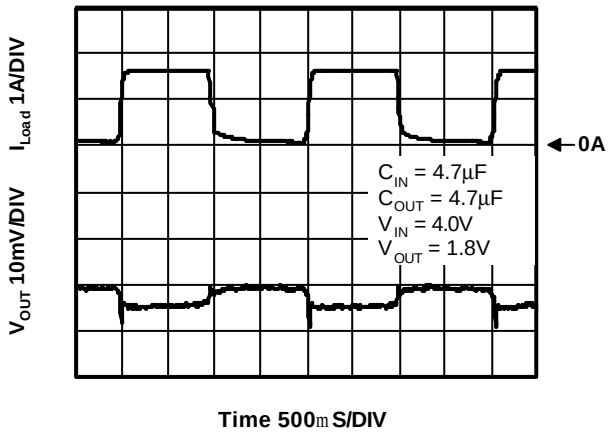

Current Limit Response

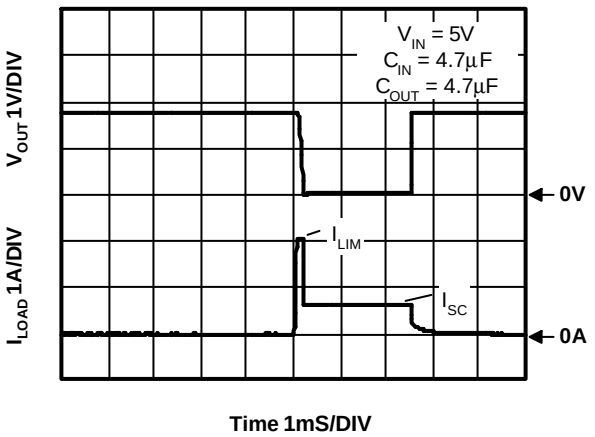

Overtemperature Shutdown

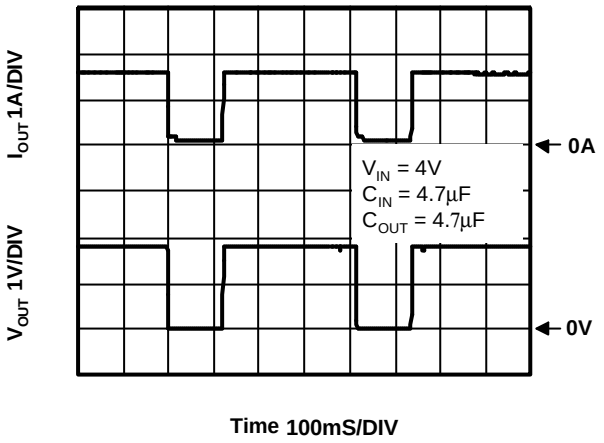

Stability vs. ESR vs. I_{Load}

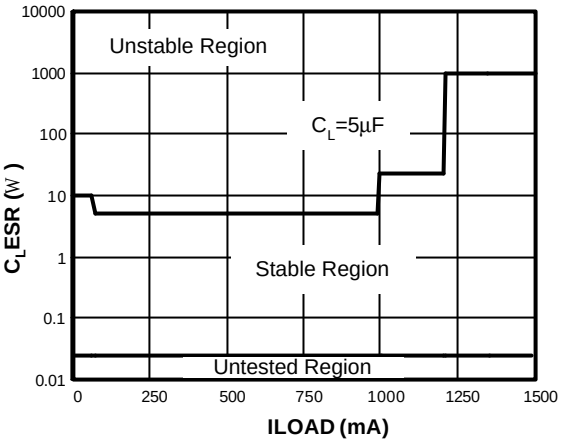

Stability vs. ESR vs. I_{Load}

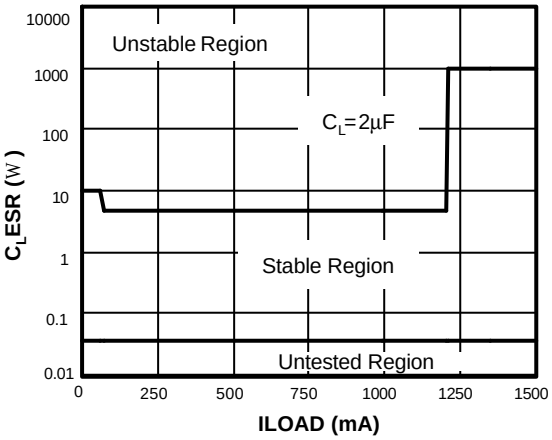

Stability vs. ESR vs. I_{Load}

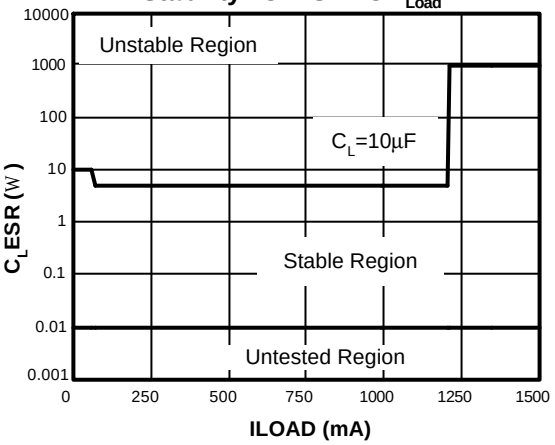

■ External Resistor Divider Table

R1 (K Ohm)	1	2	5	10	20	50	100	200	500	1000
Vout	R2(kohm)=(1.242*R1(kohm))/(Vout-1.242)									
1.30	21.41	42.83	107.07	214.14	428.28	1070.69				
1.35	11.50	23.00	57.50	115.00	230.00	575.00				
1.40	7.86	15.72	39.30	78.61	157.22	393.04				
1.45	5.97	11.94	29.86	59.71	119.42	298.56	597.55			
1.50	4.81	9.63	24.07	48.14	96.28	240.70	481.68	962.79		
1.55	4.03	8.06	20.16	40.32	80.65	201.62	403.44	806.49		
1.60	3.47	6.94	17.35	34.69	69.39	173.46	347.07	693.85		
1.65	3.04	6.09	15.22	30.44	60.88	152.21	304.52	608.82		
1.70	2.71	5.42	13.56	27.12	54.24	135.59	271.27	542.36		
1.75	2.44	4.89	12.22	24.45	48.90	122.24	244.56	488.98		
1.80	2.23	4.45	11.13	22.26	44.52	111.29	222.64	445.16		
1.85	2.04	4.09	10.21	20.43	40.86	102.14	204.33	408.55		
1.90	1.89	3.78	9.44	18.88	37.75	94.38	188.80	377.51		
1.95	1.75	3.51	8.77	17.54	35.08	87.71	175.46	350.85	877.12	
2.00	1.64	3.28	8.19	16.39	32.77	81.93	163.88	327.70	819.26	
2.05	1.54	3.07	7.69	15.37	30.74	76.86	153.74	307.43	768.56	
2.10	1.45	2.90	7.24	14.48	28.95	72.38	144.78	289.51	723.78	
2.15	1.37	2.74	6.84	13.68	27.36	68.39	136.81	273.57	683.92	
2.20	1.30	2.59	6.48	12.96	25.93	64.82	129.67	259.29	648.23	
2.25	1.23	2.46	6.16	12.32	24.64	61.61	123.23	246.43	616.07	
2.30	1.17	2.35	5.87	11.74	23.48	58.70	117.41	234.78	586.96	
2.35	1.12	2.24	5.60	11.21	22.42	56.05	112.11	224.19	560.47	
2.40	1.07	2.15	5.36	10.73	21.45	53.63	107.27	214.51	536.27	
2.45	1.03	2.06	5.14	10.28	20.56	51.41	102.83	205.63	514.07	
2.50	0.99	1.97	4.94	9.87	19.75	49.36	98.74	197.46	493.64	
2.55	0.95	1.90	4.75	9.50	18.99	47.48	94.97	189.91	474.77	
2.60	0.91	1.83	4.57	9.15	18.29	45.73	91.47	182.92	457.29	914.58
2.65	0.88	1.76	4.41	8.82	17.64	44.11	88.22	176.42	441.05	882.10
2.70	0.85	1.70	4.26	8.52	17.04	42.59	85.19	170.37	425.93	851.85
2.75	0.82	1.65	4.12	8.24	16.47	41.18	82.37	164.72	411.80	823.61
2.80	0.80	1.59	3.99	7.97	15.94	39.86	79.73	159.44	398.59	797.18
2.85	0.77	1.54	3.86	7.72	15.45	38.62	77.25	154.48	386.19	772.39
2.90	0.75	1.50	3.75	7.49	14.98	37.45	74.92	149.82	374.55	749.10
2.95	0.73	1.45	3.64	7.27	14.54	36.36	72.72	145.43	363.58	727.17
3.00	0.71	1.41	3.53	7.06	14.13	35.32	70.65	141.30	353.24	706.48
3.05	0.69	1.37	3.43	6.87	13.74	34.35	68.70	137.39	343.47	686.95
3.10	0.67	1.34	3.34	6.68	13.37	33.42	66.85	133.69	334.23	668.46

■ External Resistor Divider Table (contd.)

R1 (K Ohm)	1	2	5	10	20	50	100	200	500	1000
Vout	R2(kohm)=(1.242*R1(kohm))/(Vout-1.242)									
3.15	0.65	1.30	3.25	6.51	13.02	32.55	65.09	130.19	325.47	650.94
3.20	0.63	1.27	3.17	6.34	12.69	31.72	63.43	126.86	317.16	634.32
3.25	0.62	1.24	3.09	6.19	12.37	30.93	61.85	123.71	309.26	618.53
3.30	0.60	1.21	3.02	6.03	12.07	30.17	60.35	120.70	301.75	603.50
3.35	0.59	1.18	2.95	5.89	11.78	29.46	58.92	117.84	294.59	589.18
3.40	0.58	1.15	2.88	5.76	11.51	28.78	57.55	115.11	287.77	575.53
3.45	0.56	1.13	2.81	5.63	11.25	28.13	56.25	112.50	281.25	562.50
3.50	0.55	1.10	2.75	5.50	11.00	27.50	55.00	110.01	275.02	550.04
3.55	0.54	1.08	2.69	5.38	10.76	26.91	53.81	107.63	269.06	538.13
3.60	0.53	1.05	2.63	5.27	10.53	26.34	52.67	105.34	263.36	526.72
3.65	0.52	1.03	2.58	5.16	10.32	25.79	51.58	103.16	257.89	515.78
3.70	0.51	1.01	2.53	5.05	10.11	25.26	50.53	101.06	252.64	505.29
3.75	0.50	0.99	2.48	4.95	9.90	24.76	49.52	99.04	247.61	495.22
3.80	0.49	0.97	2.43	4.86	9.71	24.28	48.55	97.11	242.77	485.54
3.85	0.48	0.95	2.38	4.76	9.52	23.81	47.62	95.25	238.11	476.23
3.90	0.47	0.93	2.34	4.67	9.35	23.36	46.73	93.45	233.63	467.27
3.95	0.46	0.92	2.29	4.59	9.17	22.93	45.86	91.73	229.32	458.64
4.00	0.45	0.90	2.25	4.50	9.01	22.52	45.03	90.07	225.16	450.33
4.05	0.44	0.88	2.21	4.42	8.85	22.12	44.23	88.46	221.15	442.31
4.10	0.43	0.87	2.17	4.35	8.69	21.73	43.46	86.91	217.28	434.57
4.15	0.43	0.85	2.14	4.27	8.54	21.35	42.71	85.42	213.55	427.10
4.20	0.42	0.84	2.10	4.20	8.40	20.99	41.99	83.98	209.94	419.88
4.25	0.41	0.83	2.06	4.13	8.26	20.64	41.29	82.58	206.45	412.90
4.30	0.41	0.81	2.03	4.06	8.12	20.31	40.61	81.23	203.07	406.15
4.35	0.40	0.80	2.00	4.00	7.99	19.98	39.96	79.92	199.81	399.61
4.40	0.39	0.79	1.97	3.93	7.87	19.66	39.33	78.66	196.64	393.29
4.45	0.39	0.77	1.94	3.87	7.74	19.36	38.72	77.43	193.58	387.16
4.50	0.38	0.76	1.91	3.81	7.62	19.06	38.12	76.24	190.61	381.22
4.55	0.38	0.75	1.88	3.75	7.51	18.77	37.55	75.09	187.73	375.45
4.60	0.37	0.74	1.85	3.70	7.40	18.49	36.99	73.97	184.93	369.86
4.65	0.36	0.73	1.82	3.64	7.29	18.22	36.44	72.89	182.22	364.44
4.70	0.36	0.72	1.80	3.59	7.18	17.96	35.92	71.83	179.58	359.17
4.75	0.35	0.71	1.77	3.54	7.08	17.70	35.40	70.81	177.02	354.05
4.80	0.35	0.70	1.75	3.49	6.98	17.45	34.91	69.81	174.54	349.07
4.85	0.34	0.69	1.72	3.44	6.88	17.21	34.42	68.85	172.12	344.24
4.90	0.34	0.68	1.70	3.40	6.79	16.98	33.95	67.91	169.76	339.53
4.95	0.33	0.67	1.67	3.35	6.70	16.75	33.50	66.99	167.48	334.95
5.00	0.33	0.66	1.65	3.30	6.61	16.52	33.05	66.10	165.25	330.49

Note: Small load(greater than 2 mA) is necessary as R1 or R2 is larger than 50 K Ohm. Otherwise, outputvoltage probably cannot be pulled down to 0 V on disable mode.

■ Tape and Reel Dimension

TO-263-5

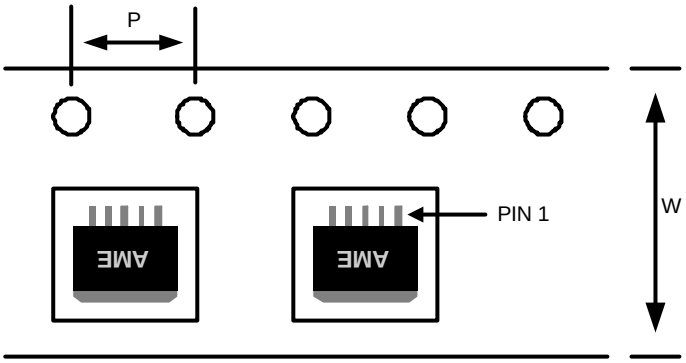

Carrier Tape, Number of Components Per Reel and Reel Size

Package	Carrier Width (W)	Pitch (P)	Part Per Full Reel	Reel Size
TO-263-5	24.0±0.1 mm	4.0±0.1 mm	800pcs	330±1 mm

SOP-8

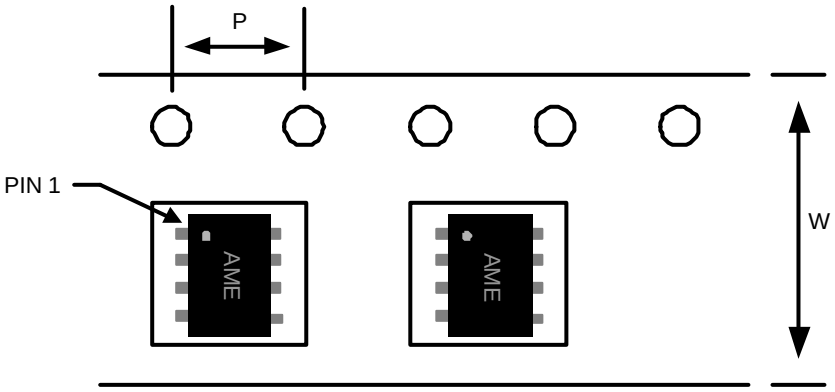

Carrier Tape, Number of Components Per Reel and Reel Size

Package	Carrier Width (W)	Pitch (P)	Part Per Full Reel	Reel Size
SOP-8	12.0±0.1 mm	4.0±0.1 mm	2500pcs	330±1 mm

■ Package Dimension

SOP-8

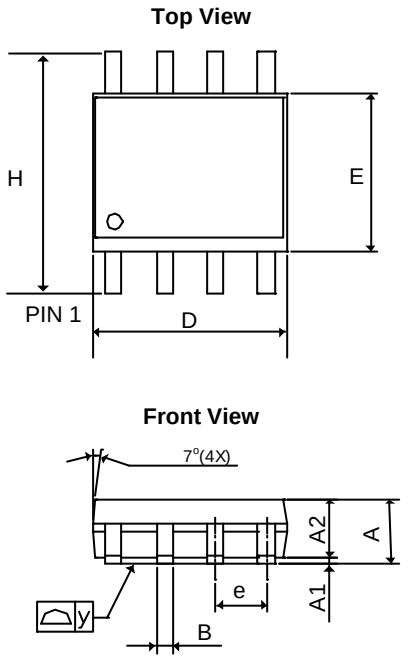

SYMBOLS	MILLIMETERS		INCHES	
	MIN	MAX	MIN	MAX
A	1.35	1.75	0.05315	0.0689
A_1	0.10	0.30	0.00394	0.01181
A2	1.473 REF		0.05799 REF	
B	0.33	0.51	0.01299	0.02008
C	0.19	0.25	0.00748	0.00984
D	4.80	5.33	0.18898	0.20984
E	3.80	4.00	0.14961	0.15748
e	1.27 BSC		0.05000 BSC	
L	0.40	1.27	0.01575	0.05000
H	5.80	6.30	0.22835	0.24803
y	-	0.10	-	0.00394
q	0°	8°	0°	8°

TO-263-5

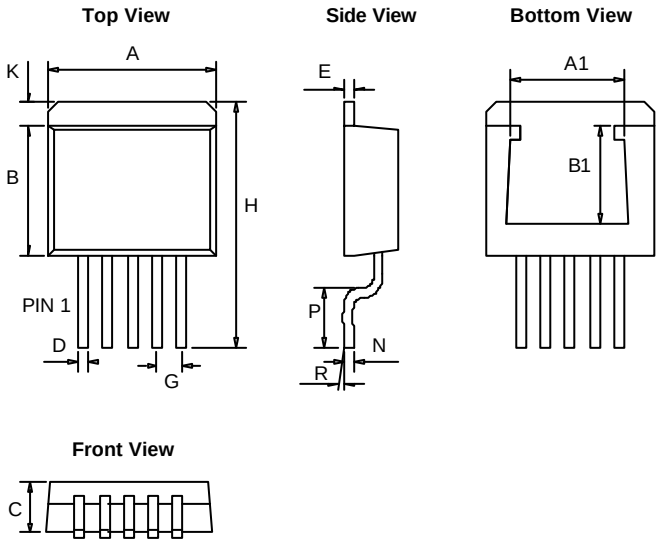

SYMBOLS	MILLIMETERS		INCHES	
	MIN	MAX	MIN	MAX
A	10.050	10.668	0.396	0.420
B	8.280	9.169	0.326	0.361
C	4.310	4.670	0.170	0.184
D	0.660	0.910	0.026	0.036
E	1.140	1.400	0.045	0.055
G	1.70REF		0.067 REF	
H	14.600	15.875	0.575	0.625
K	1.143	1.680	0.045	0.066
N	0.330	0.580	0.013	0.023
P	2.280	2.800	0.090	0.110
R	0°	8°	0°	8°
A1	7.50	7.70	0.295	0.303
B1	5.80	6.45	0.228	0.254

www.ame.com.tw
E-Mail: sales@ame.com.tw

Life Support Policy:
These products of AME, Inc. are not authorized for use as critical components in life-support devices or systems, without the express written approval of the president of AME, Inc.

AME, Inc. reserves the right to make changes in the circuitry and specifications of its devices and advises its customers to obtain the latest version of relevant information.

© AME, Inc. , November 2008

Document: 2013-DS8826-D.04

Corporate Headquarter

AME, Inc.

2F, 302 Rui-Guang Road, Nei-Hu District
Taipei 114, Taiwan.
Tel: 886 2 2627-8687
Fax: 886 2 2659-2989