4 Stereo Inputs and 1 Stereo Output Volume, Tone, Balance, Loudness and Selectable Input Gain

FEATURES

- Operation range : 2.7V~6.5V
- 4 stereo inputs with selectable input gain
- 2 independent speaker controls for balance
- Tone controls (treble and bass)
- Loudness and independent mute function
- Volume control in 1.25 dB/step
- I^2C interface
- Components less and good PSRR
- Housed in SOP28, SSOP28 package

APPLICATIONS

- Portable audio device
- Car stereo audio
- Hi-Fi audio system

DESCRIPTION

The MS6714 is a 4 stereo inputs/2-channel outputs digital control audio processor for the low voltage operation. Volume, tone (bass and treble), and balance (left/right) processor are incorporated into a single chip. The MS6714 also has the loudness function and selectable input gain. These functions can be built a Hi-Fi audio system easily. All functions are programmable via the serial I^2C bus. The default states of the chip as the power is on are: the volume is -78.75dB, the stereo 4 is selected, all the speakers are mute and the gains of the input stage, the bass and the treble are 0dB.

BLOCK DIAGRAM

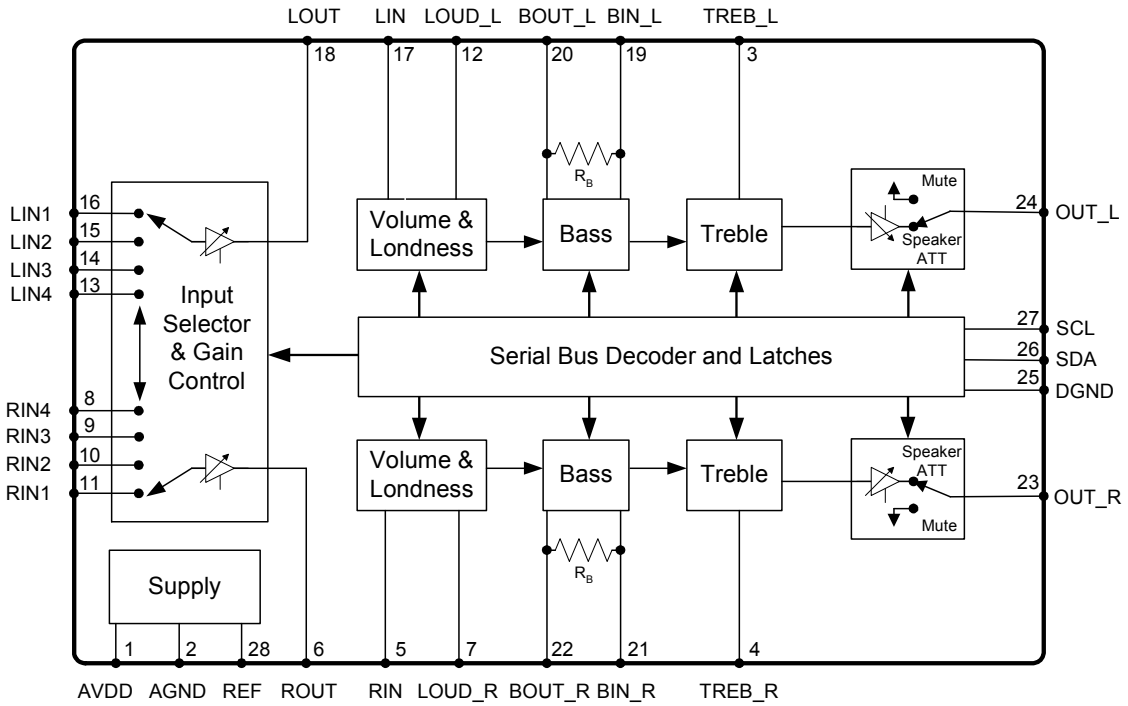

PIN CONFIGURATION

Symbol	Pin	Description
VDD	1	Supply Input Voltage
AGND	2	Analog Ground
TREB_L	3	Left Channel Input for Treble Controller
TREB_R	4	Right Channel Input for Treble Controller
RIN	5	Audio Processor Right Channel Input
ROUT	6	Gain Output and Input Selector for Right Channel
LOUD_R	7	Right Channel Loudness Input
RIN4	8	Right Channel Input 4
RIN3	9	Right Channel Input 3
RIN2	10	Right Channel Input 2
RIN1	11	Right Channel Input 1
LOUD_L	12	Left Channel Loudness Input
LIN4	13	Left Channel Input 4
LIN3	14	Left Channel Input 3
LIN2	15	Left Channel Input 2
LIN1	16	Left Channel Input 1
LIN	17	Audio Processor Left Channel Input
LOUT	18	Gain Output and Input Selector for Left Channel
BIN_L	19	Left Bass Controller Input Channel
BOUT_L	20	Left Bass Controller Output Channel
BIN_R	21	Right Bass Controller Input Channel
BOUT_R	22	Right Bass Controller Output Channel
OUT_R	23	Right Speaker Output
OUT_L	24	Left Speaker Output
DGND	25	Digital Ground
SDA	26	I^2C Data Input
SCL	27	I^2C Clock Input
REF	28	Analog Reference Voltage（1/2VDD）

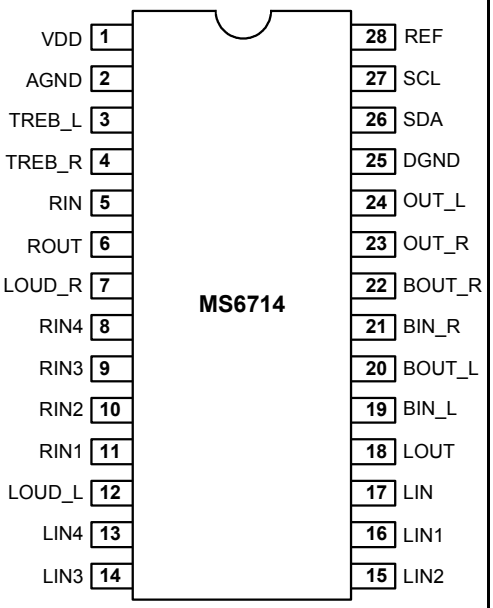

SOP28 / SSOP28

ORDERING INFORMATION

Package	Part number	Packaging Marking	Transport Media
28-Pin SOP (lead free)	MS6714GTR	MS6714G	1k Units Tape and Reel
28-Pin SOP (lead free)	MS6714GU	MS6714G	25 Units Tube
28-Pin SSOP (lead free)	MS6714SSGTR	MS6714G	2.5k Units Tape and Reel
28-Pin SSOP (lead free)	MS6714SSGU	MS6714G	50 Units Tube

RoHS Compliance

ABSOLUTE MAXIMUM RATINGS

Symbol	Parameter	Rating	Unit
V_{DD}	Supply Voltage	6.5	V
V_{ESD}	Electrostatic Handling	-3000 to 3000	V
T_{STG}	Storage Temperature Range	-65 to 150	℃
T_A	Operating Ambient Temperature Range	-40 to 85	℃
T_J	Maximum Junction Temperature	150	℃
T_S	Soldering Temperature, 10 seconds	260	℃
R_{THJA}	Thermal Resistance from Junction to Ambient in Free Air SOP28 SSOP28	 210 210	℃/W

OPERATING RATINGS

Symbol	Parameter	Min	Typ	Max	Unit
V_{DD}	Supply Voltage	2.7	-	6.5	V

5V ELECTRICAL CHARACTERISTICS

(Ta=25℃, All stages 0dB, f=1kHz, C_{REF} =22uF, refer to the application circuit; unless otherwise specified)

Symbol	Parameter	Conditions	Min	Typ	Max	Unit
Supply						
I_Q	Quiescent Current	V_{IN}=0V	-	12.2	12.5	mA
PSRR	Power Supply Rejection Ratio	C_{REF} = 22uF, f = 100Hz	55	60	-	dB
Input Selectors						
R_{IN}	Input Resistance	Input 1,2,3,4	35	50	70	kΩ
G_{IN}	Input Gain Range	Gain	0	-	11.25	dB
G_{STEP}	Step Resolution		-	3.75	-	dB
ERR_G	Gain Setting error		-0.2	0	0.2	dB
LOUD	Loudness	C_{Loud}=100nF, f =20Hz Volume=-40dB	19	20	-	dB
Volume control						
CR_{VOL}	Volume Control Range	Attenuation	-78.75	-	0	dB
RES_{VOL}	Volume Step Resolution		-	1.25	-	dB
ERR_{VOL}	Volume Setting Error	Av = 0 to -40dB	-0.5	0	1	dB
		Av = -40 to -60dB	-1	0	5	dB
Speaker Attenuators						
CR_{SPK}	Speaker Control Range	Attenuation	-37.5	-	0	dB
RES_{SPK}	Speaker Step Resolution		-	1.25	-	dB
ERR_{SPK}	Speaker Setting Error		-0.2	0	0.1	dB
MUTE	Output Mute Attenuation		-	-65	-60	dB
Bass Control						
CR_{BAS}	Bass Control Range	Boost/Cut	-14	-	14	dB
RES_{BAS}	Bass Step Resolution		-	2	-	dB
ERR_{BAS}	Speaker Setting Error	f =100Hz	-0.3	0	0.1	dB
R_B	Internal Feedback Resistance		34	44	58	kΩ
Treble Control						
CR_{BAS}	Treble Control Range	Boost/Cut	-14	-	14	dB
RES_{BAS}	Treble Step Resolution		-	2	-	dB
ERR_{BAS}	Treble Setting Error	f =20kHz	-0.3	0	0.1	dB
General						
VO_{MAX}	Maximum Output Voltage Swing	(THD+N)/S <0.3%	4.3	-	-	Vpp
THD+N	Total Harmonic Distortion Plus Noise	V_{OUT}=2Vpp	-	-75	-	dB
			-	0.0177	-	%
S/N	Signal-to-Noise Ratio	V_{OUT}=4Vpp	-	97	-	dB
CS	Channel Separation Left/Right		93	97	-	dB
Bus Input						
V_{IH}	Bus High Input Level		2	-	-	V
V_{IL}	Bus Low Input Level		-	-	0.8	V

Notes:
Bass and Treble response see to curve. The center frequency and quality of the response behavior can be chosen by the external.

2.7V ELECTRICAL CHARACTERISTICS

(Ta=25℃, All stages 0dB, f=1kHz, C_{REF} =22uF, refer to the application circuit; unless otherwise specified)

Symbol	Parameter	Conditions	Min	Typ	Max	Unit
Supply						
I_Q	Quiescent Current	V_{IN}=0V	-	8.7	9	mA
PSRR	Power Supply Rejection Ratio	C_{REF} = 22uF, f = 100Hz	53	58	-	dB
General						
VO_{MAX}	Maximum Output Voltage Swing	(THD+N)/S <0.3%	-	2.5	-	Vpp
THD+N	Total Harmonic Distortion Plus Noise	V_{OUT}=2Vpp	-	-50	-	dB
			-	0.3	-	%
S/N	Signal-to-Noise Ratio	V_{OUT}=2.5Vpp	90	94	-	dB
CS	Channel Separation Left/Right		90	94	-	dB

TYPICAL PERFORMANCE CHARACTERISTICS

(Ta=25℃, All stages 0dB, f=1kHz, C_{REF} =22uF, refer to the application circuit; unless otherwise specified)

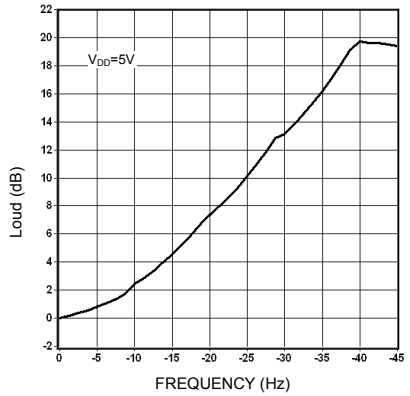

Loudness vs. Volume

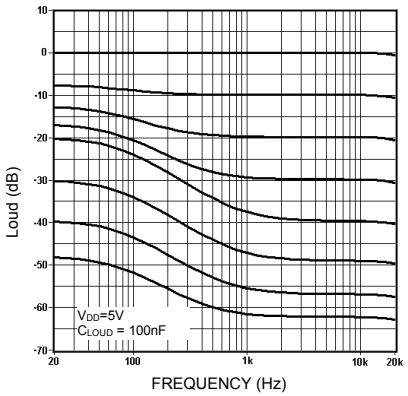

Loudness vs. Frequency vs. Volume

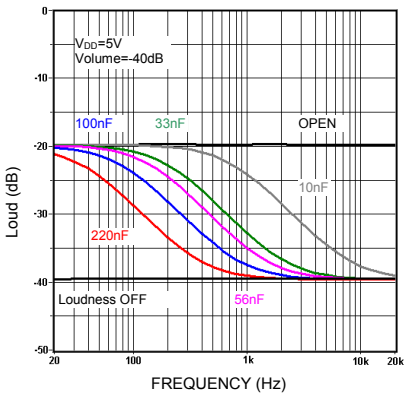

Loudness vs. External Capacitors

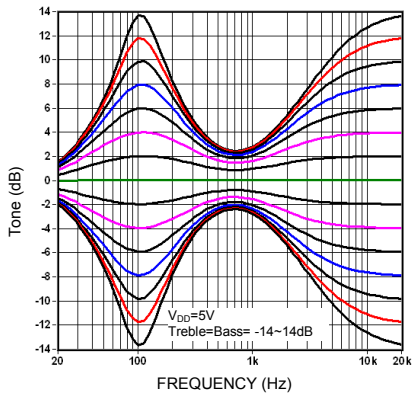

Typical Tone Response

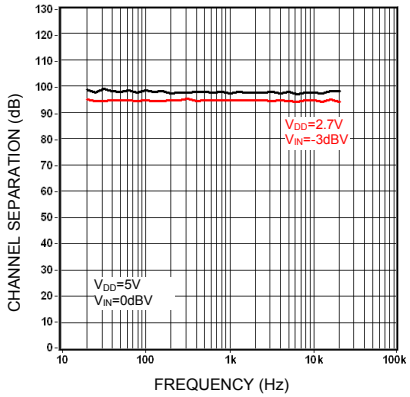

Channel Separation vs. Frequency

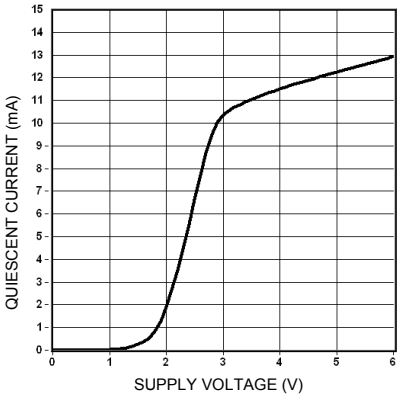

Quiescent Current vs. Supply Voltage

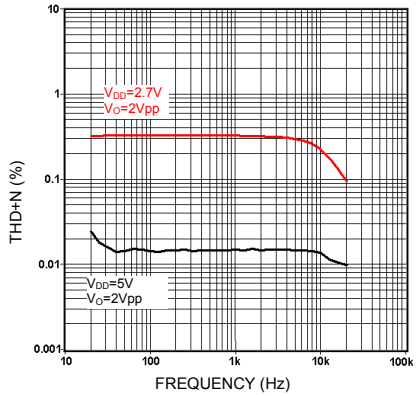

THD+N vs. Frequency

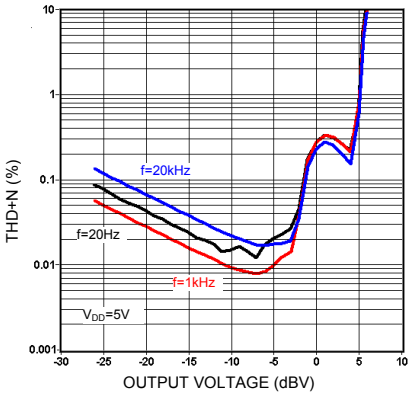

THD+N vs. Output Voltage

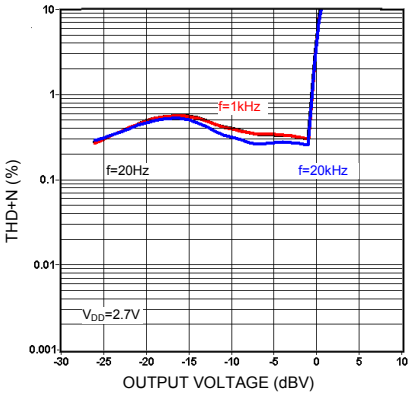

THD+N vs. Output Voltage

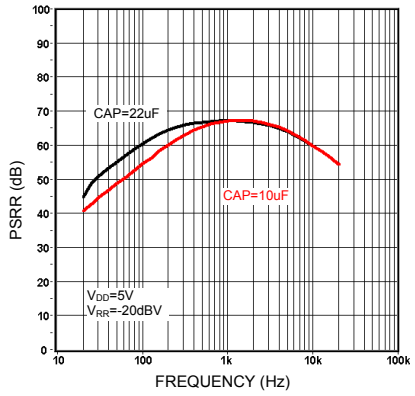

PSRR vs. Frequency

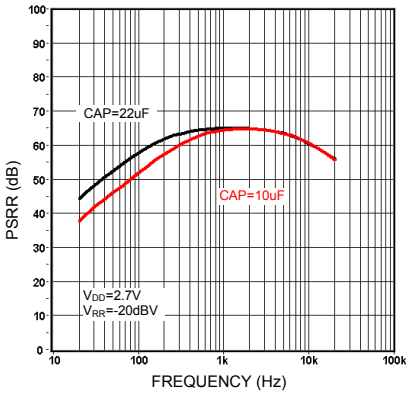

PSRR vs. Frequency

I²C BUS DESCRIPTION

Start and Stop Conditions

A start condition is activated when the SCL is set to HIGH and SDA shifts from HIGH to LOW state. The stop condition is activated when SCL is set to HIGH and SDA shifts from LOW to HIGH state. Please refer to the timing diagram below.

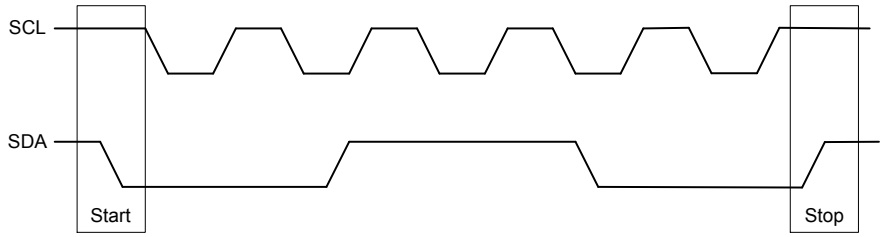

SCL : Serial Clock Line, SDA : Serial Data Line

Data Validity

A data on the SDA line is considered valid and stable only when the SCL signal is in HIGH state. The HIGH and LOW states of the SDA line can only change when the SCL signal is LOW. Please refer to the figure below.

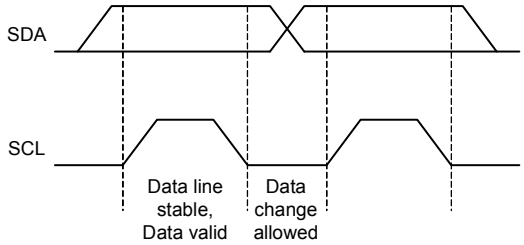

Byte Format

Every byte transmitted to the SDA line consists of 8 bits. Each byte must be followed by an acknowledge bit. The MSB is transmitted first.

Acknowledge

During the Acknowledge clock pulse, the master (up) put a resistive HIGH level on the SDA line. The peripheral (audio processor) that acknowledges has to pull-down (LOW) the SDA line during the Acknowledge clock pulse so that the SDA line is in a stable LOW state during this clock pulse. Please refer to the diagram below.

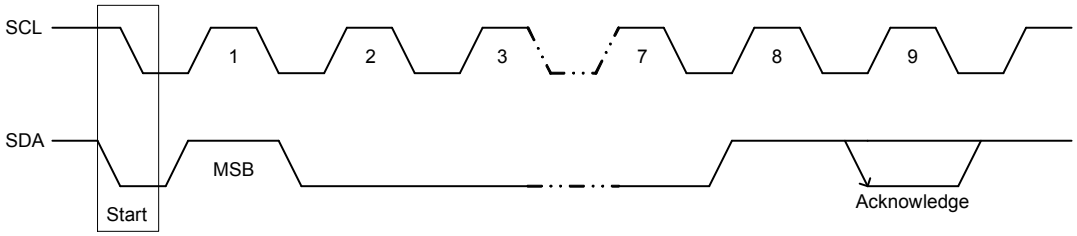

The audio processor that has been addressed has to generate an Acknowledge after receiving each byte, otherwise, the SDA line will remain at the HIGH level during the ninth (9th) clock pulse. In this case, the master transmitter can generate the STOP information in order to abort the transfer.

Timing of SDA and SCL Bus Lines

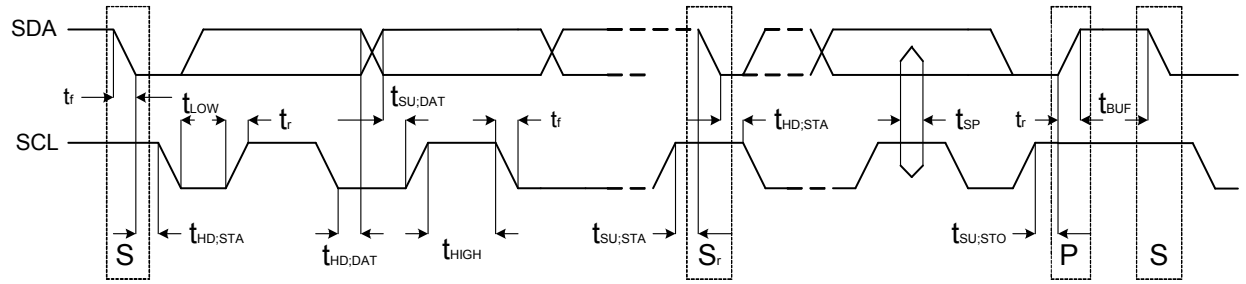

Standard Mode

Symbol	Parameter	Min	Max	Unit
f_{SCL}	SCL clock frequency	0	100	kHz
$t_{HD:STA}$	Hold time (repeated) START condition. After this period, the first clock pulse is generated	4.0	-	us
t_{LOW}	LOW period of the SCL clock	4.7	-	us
t_{HIGH}	HIGH period of the SCL clock	4.0	-	us
$t_{SU:STA}$	Set-up time for a repeated START condition	4.7	-	us
$t_{HD:DAT}$	Data hold time: For I^2C-bus devices	0	3.45	us
$t_{SU:DAT}$	Data-set-up time	250	-	ns
t_r	Rise time of both SDA and SCL signals	-	1000	ns
t_f	Fall time of both SDA and SCL signals	-	300	ns
$t_{SU:STO}$	Set-up time for STOP condition	4.0	-	us
t_{BUF}	Bus free time between a STOP and START condition	4.7	-	us
C_b	Capacitive load for each bus line	-	400	pF
V_{nL}	Noise margin at the LOW level for each connected device (including hysteresis)	$0.1V_{DD}$	-	V
V_{nH}	Noise margin at the HIGH level for each connected device (including hysteresis)	$0.2V_{DD}$	-	V

BUS INTERFACE

Data are transmitted to and from the MCU to the MS6714 via the SDA and SCL. The SDA and SCL make up the BUS interface. It should be noted that pull-up resistors must be connected to the positive supply voltage.

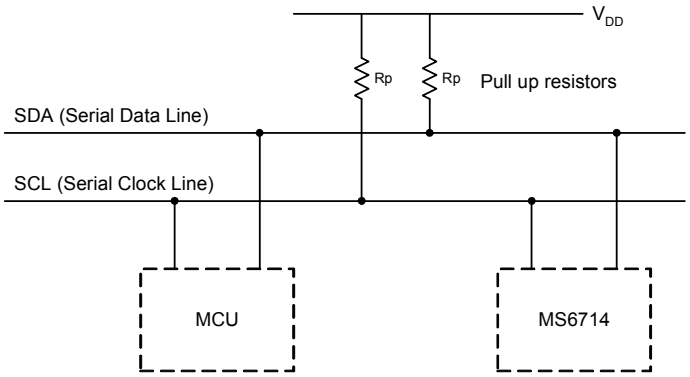

Interface Protocol

The format consists of the following

- A START condition
- A chip address byte including the MS6714 address. (7bits)
- The 8th bit of the byte must be "0".(write=0, read=1)
- MS6714 must always acknowledge the end of each transmitted byte.
- A data sequence (N-bytes + Acknowledge)
- A STOP condition

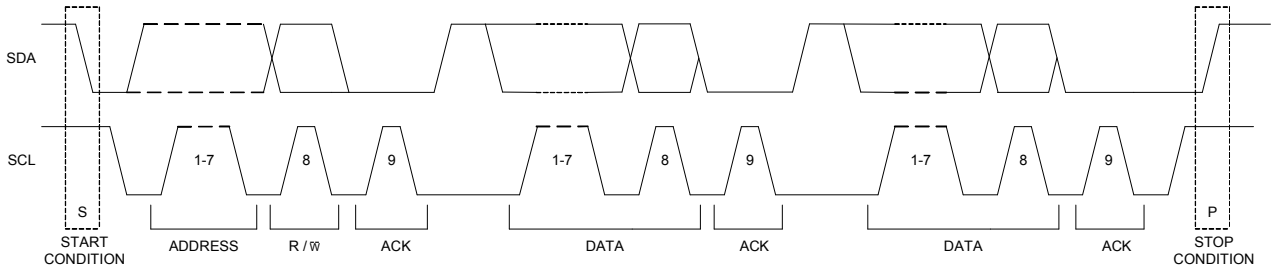

Address Code

The chip address of the MS6714 is 88H.

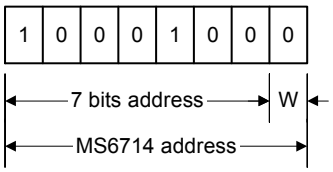

Data Bytes Description

The default states of the chip as the power is on are: the volume is -78.75dB, the stereo 4 is selected, all the speakers are mute and the gains of the input stage, the bass and the treble are 0dB.

MSB							LSB	Function
0	0	B2	B1	B0	A2	A1	A0	Volume Control
1	1	0	B1	B0	A2	A1	A0	Speaker ATT L
1	1	1	B1	B0	A2	A1	A0	Speaker ATT R
0	1	0	G1	G0	S2	S1	S0	Audio Switch
0	1	1	0	C3	C2	C1	C0	Bass Control
0	1	1	1	C3	C2	C1	C0	Treble Control

Where Ax = 1.25dB steps; Bx = 10dB steps; Cx = 2dB steps; Gx = 3.75dB steps

Volume

MSB							LSB	Function
0	**0**	**B2**	**B1**	**B0**	**A2**	**A1**	**A0**	**Volume 1.25 dB steps**
					0	0	0	0
					0	0	1	-1.25
					0	1	0	-2.5
					0	1	1	-3.75
					1	0	0	-5
					1	0	1	-6.25
					1	1	0	-7.5
					1	1	1	-8.75
0	**0**	**B2**	**B1**	**B0**	**A2**	**A1**	**A0**	**Volume 10dB steps**
		0	0	0				0
		0	0	1				-10
		0	1	0				-20
		0	1	1				-30
		1	0	0				-40
		1	0	1				-50
		1	1	0				-60
		1	1	1				-70

The default volume is –78.75dB.

Speaker Attenuator

MSB							LSB	Function（dB）
1	**1**	**0**	**B1**	**B0**	**A2**	**A1**	**A0**	**Speaker ATT L**
1	**1**	**1**	**B1**	**B0**	**A2**	**A1**	**A0**	**Speaker ATT R**
					0	0	0	0
					0	0	1	-1.25
					0	1	0	-2.5
					0	1	1	-3.75
					1	0	0	-5
					1	0	1	-6.25
					1	1	0	-7.5
					1	1	1	-8.75
			0	0				0
			0	1				-10
			1	0				-20
			1	1				-30
			1	1	1	1	1	Mute

LF: Left Front, RF: Right Front, LR: Left Rear, RR: Right Rear
The default state is mute.

Audio Switch

MSB							LSB	Function
0	**1**	**0**	**G1**	**G0**	**S2**	**S1**	**S0**	**Audio Switch**
						0	0	Stereo 1
						0	1	Stereo 2
						1	0	Stereo 3
						1	1	Stereo 4
					0			Loudness ON
					1			Loudness OFF
			0	0				+11.25dB
			0	1				+7.5dB
			1	0				+3.75dB
			1	1				0dB

The default state is stereo 4, loudness off and gain 0dB.

Bass and Treble

MSB							LSB	Function（dB）
0	**1**	**1**	**0**	**C3**	**C2**	**C1**	**C0**	**Bass**
0	**1**	**1**	**1**	**C3**	**C2**	**C1**	**C0**	**Treble**
				0	0	0	0	-14
				0	0	0	1	-12
				0	0	1	0	-10
				0	0	1	1	-8
				0	1	0	0	-6
				0	1	0	1	-4
				0	1	1	0	-2
				0	1	1	1	0
				1	0	0	0	0
				1	0	0	1	2
				1	0	1	0	4
				1	0	1	1	6
				1	1	0	0	8
				1	1	0	1	10
				1	1	1	0	12
				1	1	1	1	14

The default state is bass 0dB and treble 0dB.

Examples

Set Volume at –37.5dB.

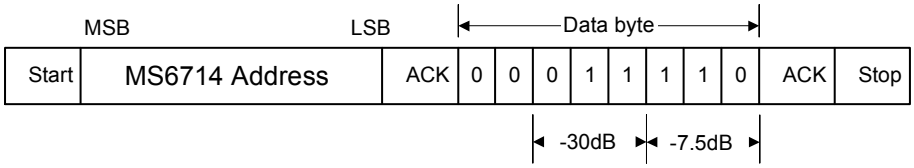

Set Speaker Right at –30dB.

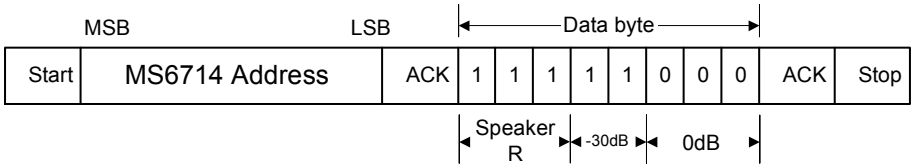

Set Speaker Left in mute-on.

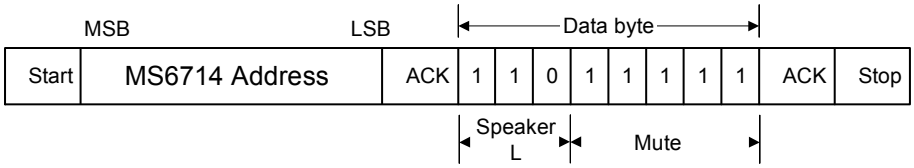

Set Stereo 2 Input with gain of +7.5 dB and Loudness on.

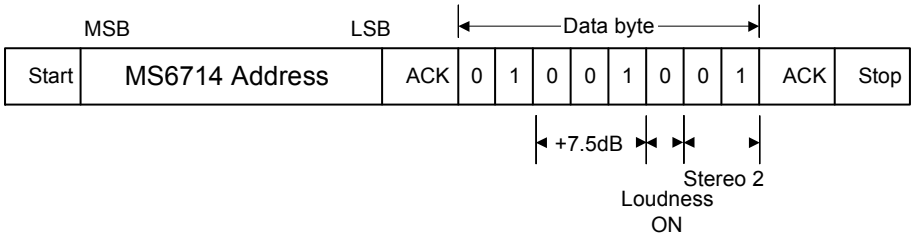

Set treble at -10dB.

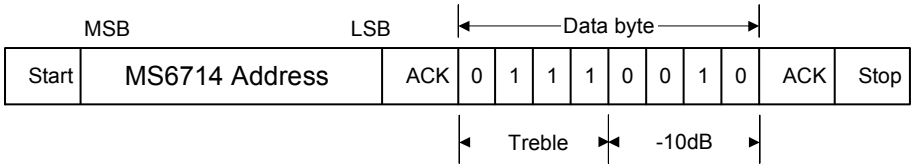

APPLICATION INFORMATION

Basic Application Example

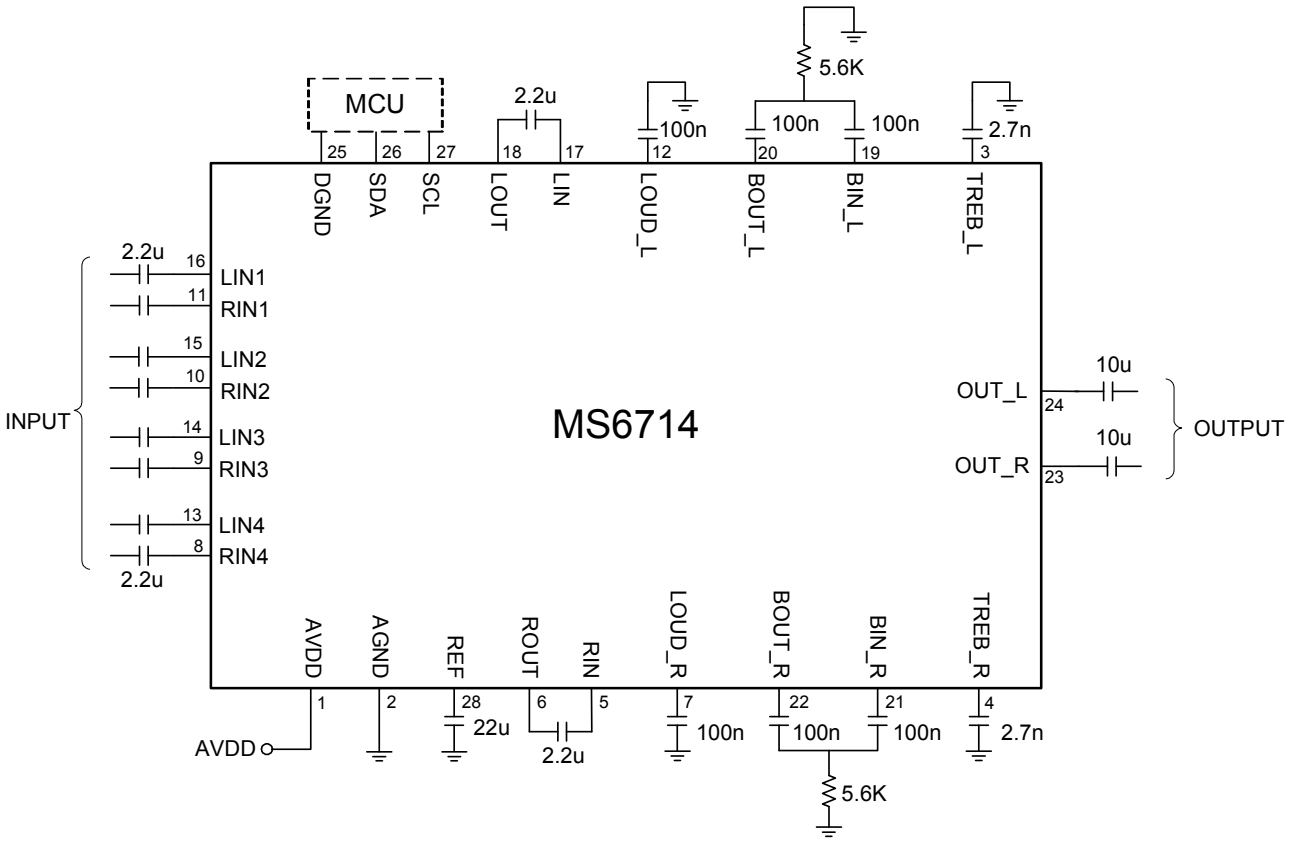

EXTERNAL DIMENSIONS

SOP28 (300mil)

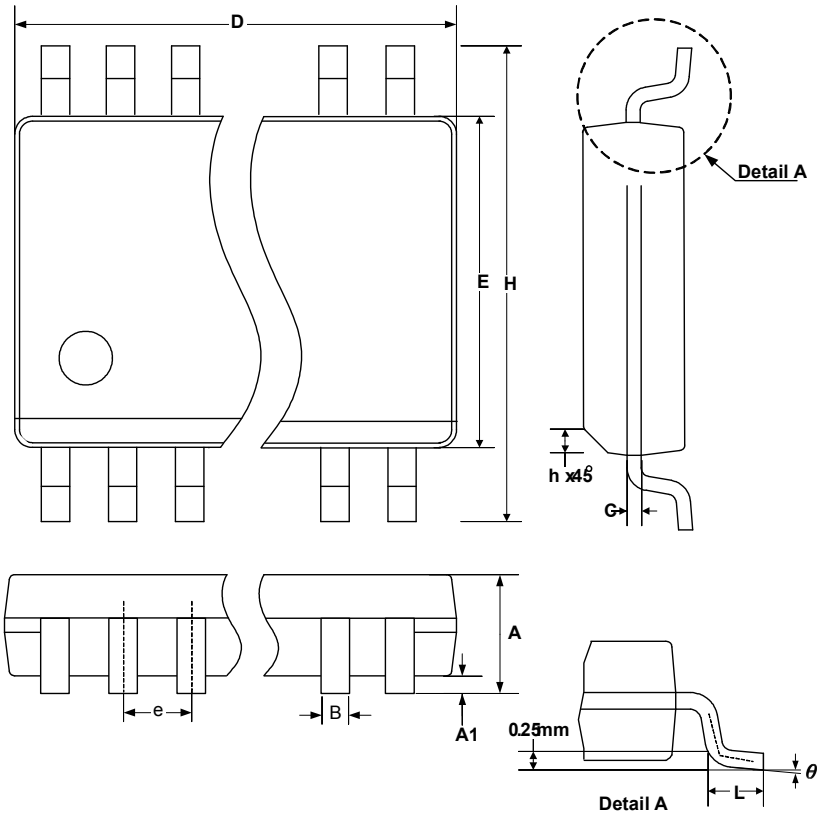

Symbol	Dimension in mm		Dimension in inch	
	Min	Max	Min	Max
A	2.35	2.65	0.0926	0.1043
A1	0.10	0.30	0.0040	0.0118
B	0.33	0.51	0.013	0.020
C	0.23	0.32	0.0091	0.0125
e	1.27 BASIC		0.050 BASIC	
E	7.40	7.60	0.2914	0.2992
H	10.00	10.65	0.394	0.419
L	0.40	1.27	0.016	0.050
D	17.70	18.10	0.6969	0.7125
h	0.25	0.75	0.010	0.029
θ	0°	8°	0°	8°

SSOP28

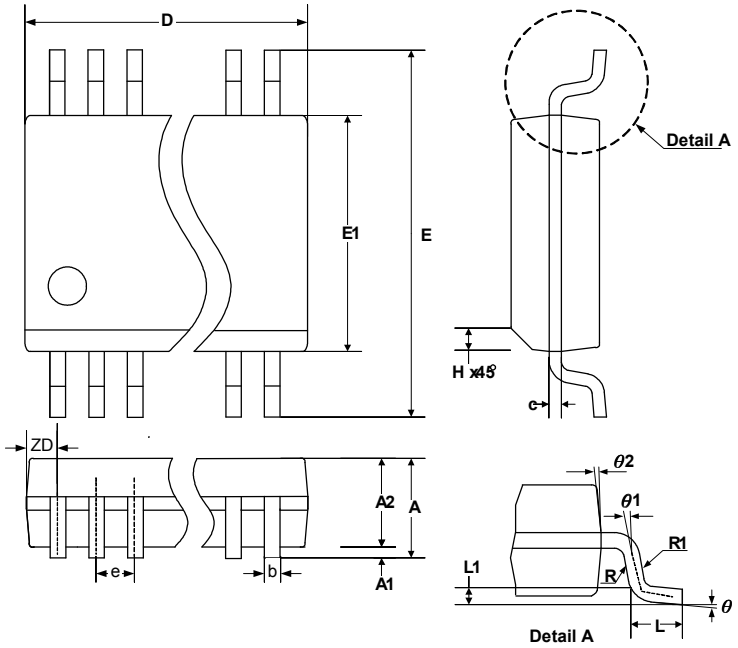

Symbol	Dimension in mm			Dimension in inch		
	Min	NOM	Max	Min	NOM	Max
A	1.35	1.63	1.75	0.053	0.064	0.069
A1	0.10	0.15	0.25	0.004	0.006	0.010
A2	-	-	1.50	-	-	0.059
b	0.20	-	0.30	0.008	-	0.012
c	0.18	-	0.25	0.007	-	0.010
e	0.635 BASIC			0.025 BASIC		
D	9.8	9.91	10.01	0.388	0.390	0.394
E	5.79	5.99	6.20	0.228	0.236	0.244
E1	3.81	3.91	3.99	0.150	0.154	0.157
L	0.41	0.635	1.27	0.016	0.025	0.050
h	0.25	-	0.50	0.010	-	0.020
ZD	0.838REF			0.033REF		
R1	0.20	-	0.33	0.008	-	0.013
R	0.20	-	-	0.008	-	-
θ	0°	-	8°	0°	-	8°
θ1	0°	-		-0°	-	-
θ2	5°	10°	15°	5°	10°	15°

DEMO BOARD

The demo board used IR technique controller to control the MS6714. The default states of demo board are Stereo 4, Input Gain 0dB, Volume –20dB, Attenuator Speakers 0dB, Loudness Off, Bass 0dB and Treble 0dB.

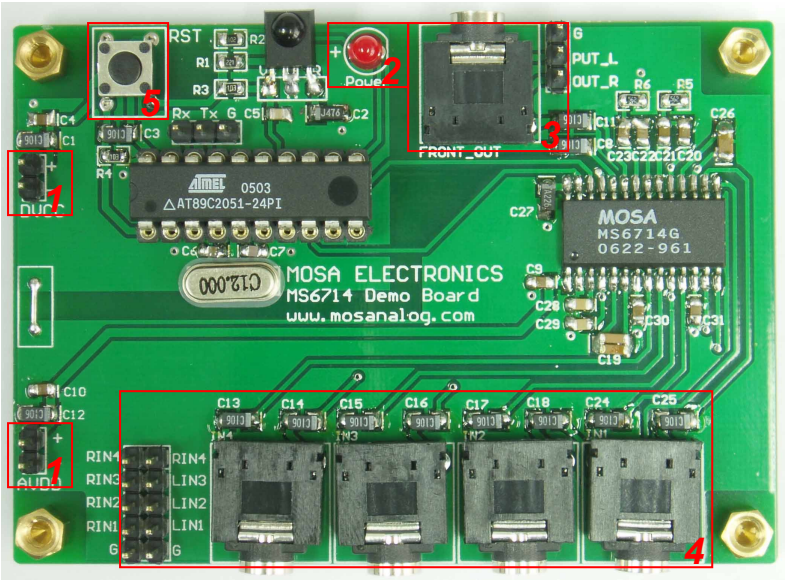

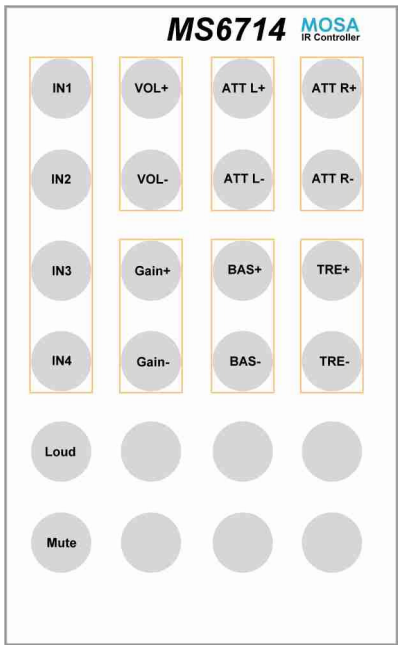

Label 1: Supply Voltage

The AVDD and DVDD should be the same supply voltage, the supply range is 2.7 ~ 6.5 VDC.

Label 2: LED Indicator

The LED indicates the power status and the IR received status. It is red-dark blink once when the MCU has received the function code correctly.

Label 3: Output Section

Please connected to a post-power-amplifier, as active speaker.

Label 4: Input Section

There are four stereo inputs in the section. Please input stereo audio signal, as music or sine wave.

Label 5: MCU Reset

The MS6714 will be loaded the default values by MCU. The default states of demo board are Stereo 4, Input Gain 0dB, Volume –20dB, Attenuator Speakers 0dB, Loudness Off, Bass 0dB and Treble 0dB.

IR Controller

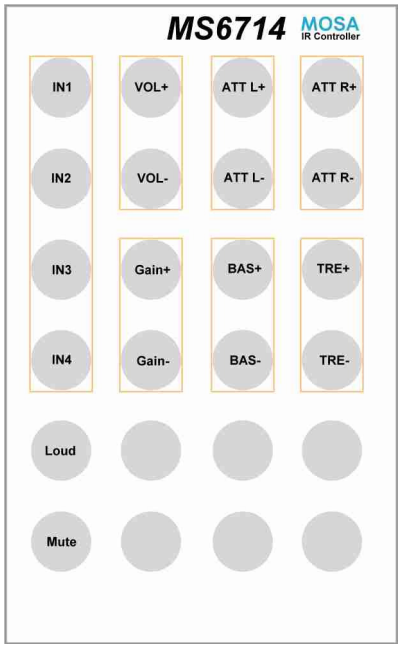

IN1, IN2, IN3, IN4 : Select Stereo Input.
IN1, 2, 3, 4 represents Stereo Input 1, 2, 3, 4.

VOL+, VOL- : The volume control keys.
The volume control in 1.5dB/step as the switch is pressed once, the range is –79dB to 0dB.

Gain+, Gain- : The gain control keys for stereo input.
The gain control in 3.75dB/step as the switch is pressed once, the range is 0dB to 11.25dB.

ATTL+, ATTL- : The attenuation control keys for left speaker output.
The attenuation in 1.25dB/step as the switch is pressed once, the range is -37.5dB to 0dB.

ATTR+, ATTR- : The attenuation control keys for right speaker output.
The attenuation in 1.25dB/step as the switch is pressed once, the range is -37.5dB to 0dB.

TRE+, TRE- : The treble control keys.
The treble control in 2dB/step as the switch is pressed once, the range is –14dB to 14dB.

BAS+, BAS- : The bass control keys.
The bass control in 2dB/step as the switch is pressed once, the range is -14dB to 14dB.

Loud : The loudness key
Press the key once to set loudness on or loudness off.

Mute : The mute key controls all speaker outputs
Press the key once to set mute-on or mute-off.

Circuit

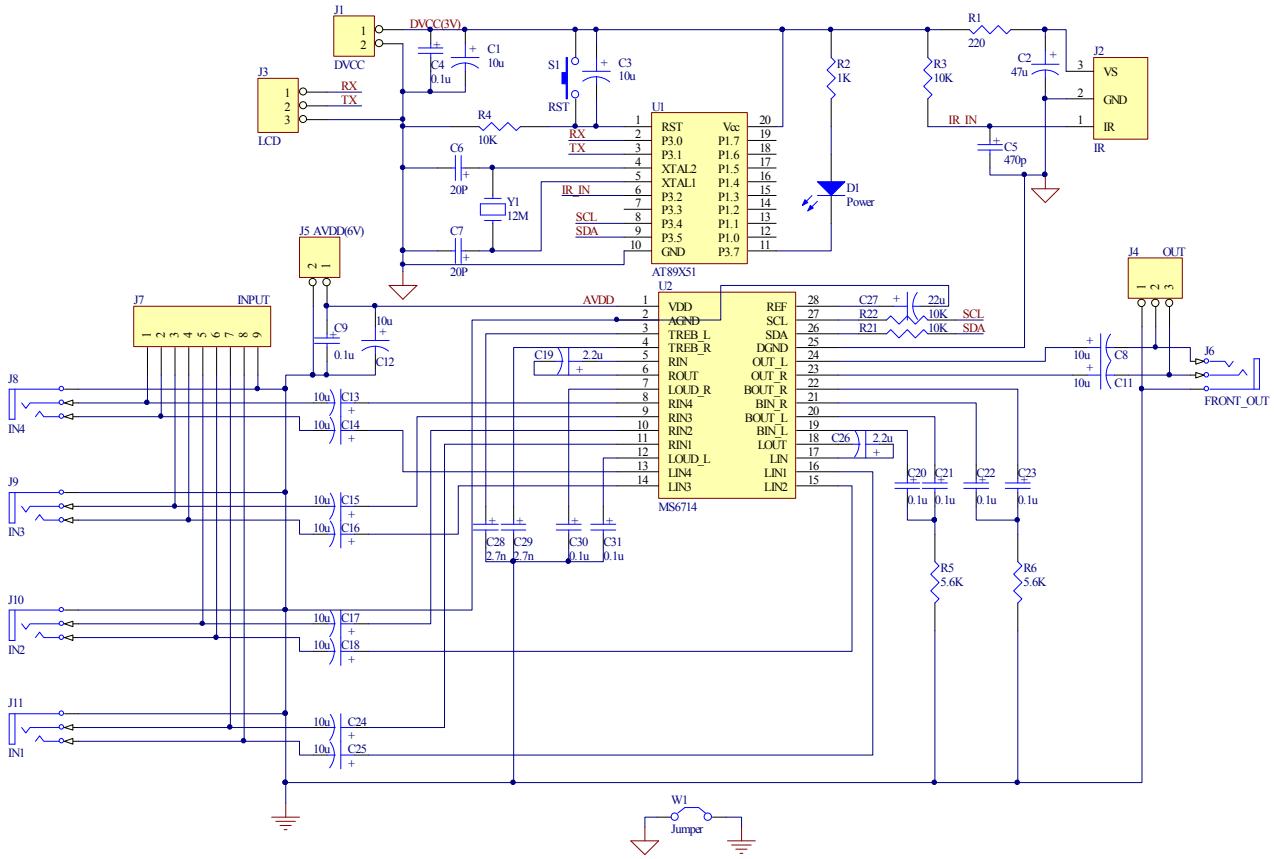
J1
DVCC
DVCC(3V)
C4
0.1u
C1
10u
J3
RX
TX
LCD
S1
RST
C3
10u
R4
10K
U1
RST
P3.0
P3.1
XTAL2
XTAL1
P3.2
P3.3
P3.4
P3.5
GND
Vcc
P1.7
P1.6
P1.5
P1.4
P1.3
P1.2
P1.1
P1.0
P3.7
AT89X51
C6
20P
Y1
12M
C7
20P
IR_IN
SCL
SDA
R2
1K
D1
Power
R1
220
R3
10K
C2
47u
J2
VS
GND
IR
IR
C5
470p
J5 AVDD(6V)
C9
0.1u
10u
C12
J7
INPUT
AVDD
U2
VDD
AGND
TREB_L
TREB_R
RIN
ROUT
LOUD_R
RIN4
RIN3
RIN2
RIN1
LOUD_L
LIN4
LIN3
REF
SCL
SDA
DGND
OUT_L
OUT_R
BOUT_R
BIN_R
BOUT_L
BIN_L
LOUT
LIN
LIN1
LIN2
MS6714
C27
22u
R22
10K
R21
10K
C19
2.2u
C26
2.2u
J4
OUT
C8
C11
J6
FRONT_OUT
J8
IN4
J9
IN3
J10
IN2
J11
IN1
C13
C14
C15
C16
C17
C18
C24
C25
C28
2.7n
C29
2.7n
C30
0.1u
C31
0.1u
C20
C21
C22
C23
R5
5.6K
R6
5.6K
W1
Jumper