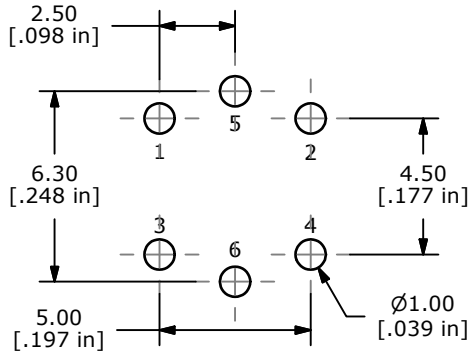

P.C.B. LAYOUT

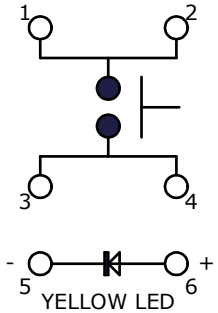

CIRCUIT: SPST

LED SPECS	UNITS	YELLOW
FORWARD CURRENT	mA	20 TYP.
FORWARD VOLTAGE	V	2.0 TYP. - 2.5 MAX.
LUMINOUS INTENSITY	MCD	1800 TYP.

D

C

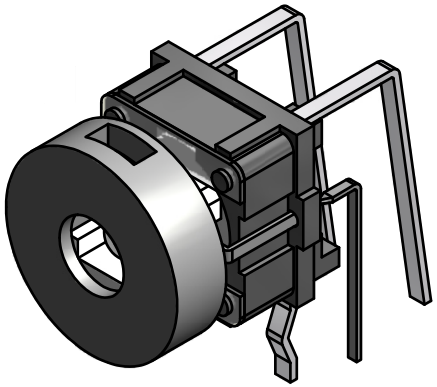

NOTES:
1. ALL DIMENSIONS IN MM [INCH]
2. GENERAL TOLERANCE: X.X=±0.4
   X.XX=±0.25
3. RATING: 12VDC @ 50mA
4. CONTACT RESISTANCE: 100mΩ MAX.
5. INSULATION RESISTANCE: 100MΩ MIN.
▲6. OPERATING FORCE: 160± 50gf
7. TRAVEL: 0.2± 0.1mm
8. OPERATING TEMPURATURE: -20˚C TO 70˚C
9. OPEREATING LIFE: 500,000 CYCLES (D)
▲10. LED: YELLOW
11. ▲ DENOTES CRITICAL PARAMETERS
12. 2002/95/EC (ROHS) COMPLIANT
13. PACKAGING: 100 PIECES PER TRAY (E)

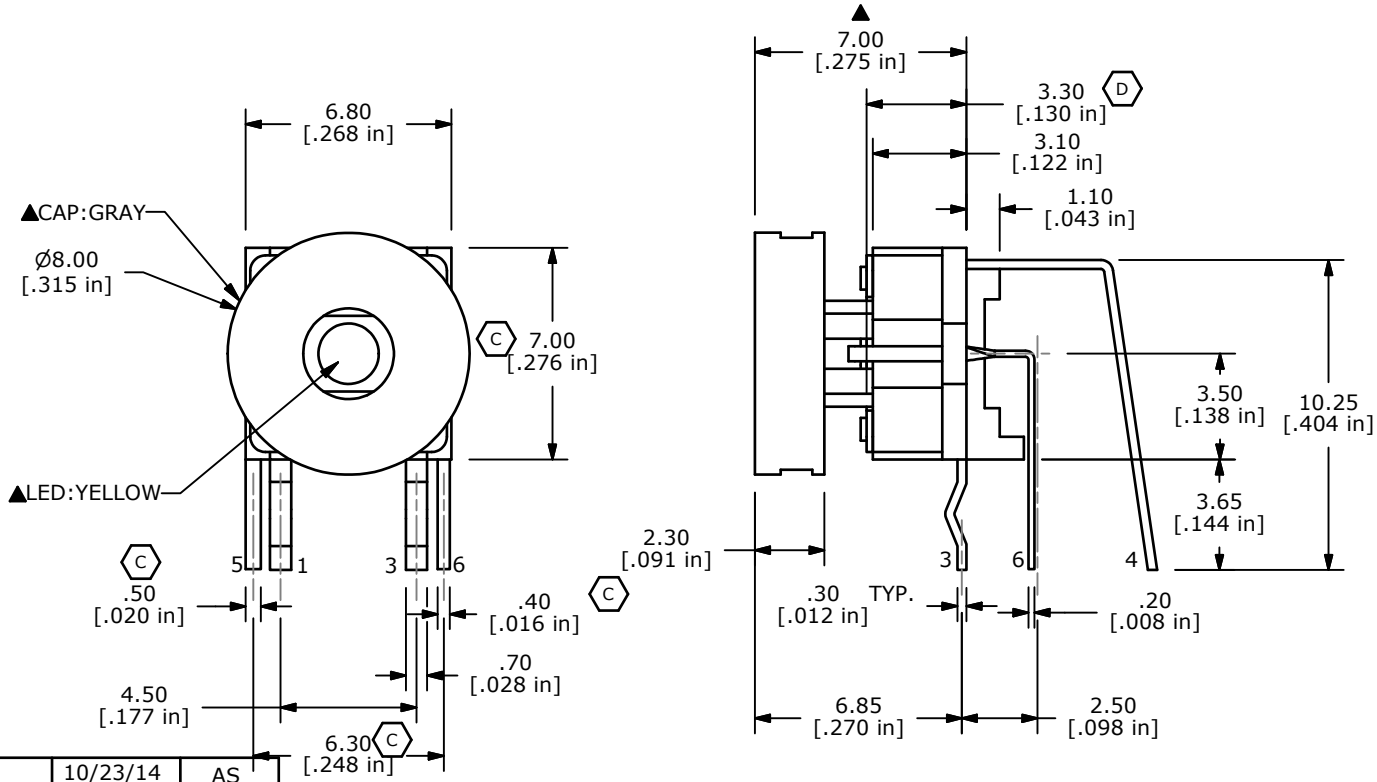

REV	PCR NO	DESCRIPTION	DATE	BY
E	21665	ADDED NOTE 13	10/23/14	AS
D	19956	CORRECT NOTES / LED CHART / DIM	05/23/11	BMA
C	19542	UPDATE DRAWING	12/21/10	BGL
B	17281	ADD GEN. TOLERANCE NOTE	5/11/07	TN
A	16177	New Release	7/12/06	RC

THE INFORMATION CONTAINED IN THIS DOCUMENT IS PROPRIETARY TO E-SWITCH AND IS NOT TO BE COPIED OR TRANSFERRED

E•SWITCH®

TITLE TL1260YQRGRY

SCALE	DATE	DR	DWG	REV
4:1	5/11/2007	TN	B200004	E