molex
one company › a world of innovation

This document was generated on 05/25/2010

PLEASE CHECK WWW.MOLEX.COM FOR LATEST PART INFORMATION

Part Number: 0878980556

Status: Active

Overview: kk

Description: 2.54mm (.100") Pitch KK® Header, Surface Mount, Breakaway, Vertical, 5 Circuits, 2.50µm (98µ") Tin (Sn) Plating, Tape on Reel Packaging, with Cap, Lead-free

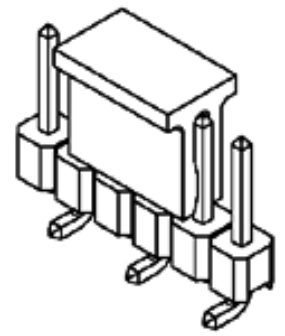

Series

image - Reference only

Documents:

Drawing (PDF) | RoHS Certificate of Compliance (PDF)

General

Product Family	PCB Headers
Series	87898
Application	Board-to-Board, Wire-to-Board
Overview	kk
Product Name	KK®

Physical

Breakaway	Yes
Circuits (Loaded)	5
Circuits (maximum)	5
Color - Resin	Black
First Mate / Last Break	No
Glow-Wire Compliant	No
Guide to Mating Part	No
Keying to Mating Part	None
Lock to Mating Part	None
Material - Metal	Copper Alloy
Material - Plating Mating	Tin
Material - Plating Termination	Tin
Material - Resin	Nylon
Number of Rows	1
Orientation	Vertical
PCB Locator	No
PCB Retention	None
Packaging Type	Embossed Tape on Reel
Pitch - Mating Interface (in)	0.100 In
Pitch - Mating Interface (mm)	2.54 mm
Pitch - Term. Interface (in)	0.100 In
Pitch - Term. Interface (mm)	2.54 mm
Polarized to Mating Part	No
Polarized to PCB	No
Robotic Placement	Pick and Place Cap
Shrouded	No
Stackable	No
Temperature Range - Operating	-55°C to +105°C
Termination Interface: Style	Surface Mount

Electrical

Current - Maximum per Contact	3A
Voltage - Maximum	250V

Solder Process Data

Duration at Max. Process Temperature (seconds)	10
Lead-free Process Capability	Reflow Capable (SMT only)
Max. Cycles at Max. Process Temperature	3
Process Temperature max. C	260

EU RoHS
ELV and RoHS Compliant

China RoHS

REACH SVHC
Not Reviewed

Halogen-Free Status
Not Reviewed

Need more information on product environmental compliance?

Email productcompliance@molex.com
For a multiple part number RoHS Certificate of Compliance, click here

Please visit the Contact Us section for any non-product compliance questions.

Search Parts in this Series
87898Series

Mates With
KK® PCB Receptacles 4455. SL™ IDT Housings 70430 , 7720, 70400. C-Grid® PCB Receptacles 90147, 90148

Material Info

Reference - Drawing Numbers

Packaging Specification	PK-89990-486
Sales Drawing	SD-87898-001

This document was generated on 05/25/2010

PLEASE CHECK WWW.MOLEX.COM FOR LATEST PART INFORMATION

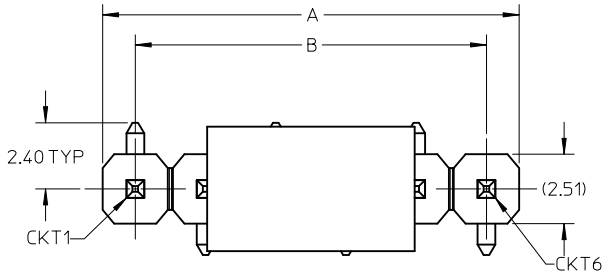

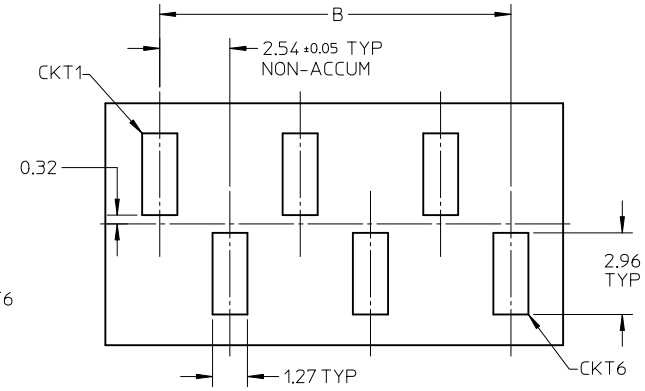

RECOMMENDED PCB LAYOUT: COMPONENT SIDE

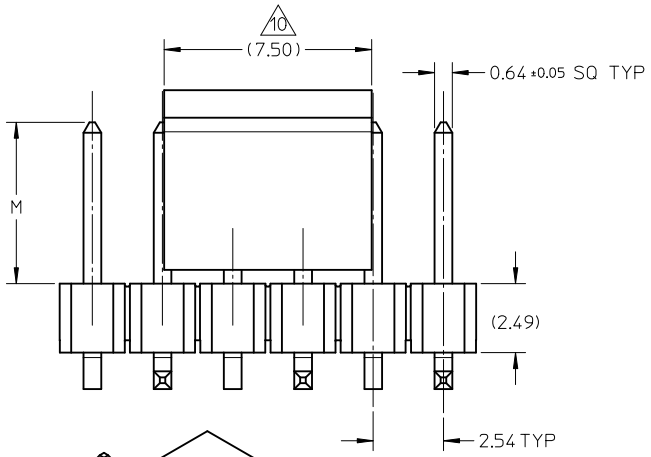

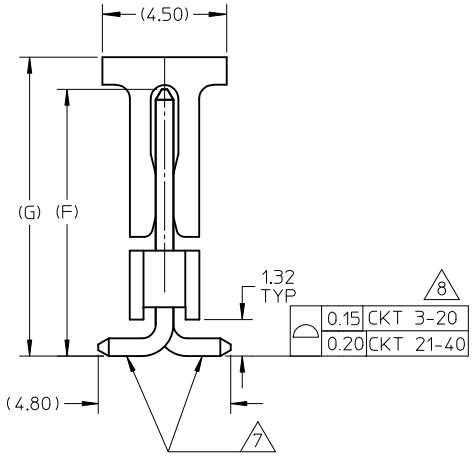

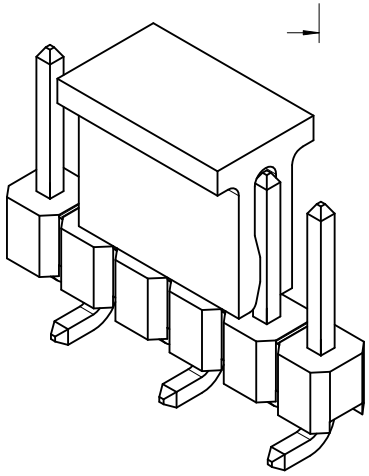

NOTES:

1. MATERIAL:
   HSG: NYLON, GLASS-FILLED, UL94V-0, COLOR: BLACK
   CAP: NYLON, GLASS-FILLED, UL94V-0, COLOR: BLACK
   PIN: 0.64MM SQ, COPPER ALLOY
2. PLATING TYPE:
   (1) GOLD FLASH OVER
   1.25μm MIN. NICKEL OVERALL.
   (2) GOLD FLASH ON CONTACT AND
   2.50μm MIN. TIN ON SOLDERTAIL OVER
   1.25μm MIN. NICKEL OVERALL.
   (4) 0.38μm MIN. GOLD PLATE ON CONTACT AND
   2.00μm MIN. TIN ON SOLDERTAIL OVER
   1.25μm MIN. NICKEL OVERALL.
   (5) 0.75μm MIN. GOLD PLATE ON CONTACT AND
   2.00μm MIN. TIN ON SOLDERTAIL OVER
   1.25μm MIN. NICKEL OVERALL.
   (6) 2.50μm MIN. TIN OVERALL
   1.25μm MIN. NICKEL OVERALL
3. PRODUCT SPECIFICATION: PS-87920-019
4. PACKAGING TYPE: SEE TABLE
5. PACKAGING SPEC:
   TUBE WITH CAP VERSION: PK-89990-558
   TUBE W/O CAP VERSION: PK-89990-545
   EMBOSS TAPE WITH CAP: PK-89990-486
6. WAFER TO BE FLAT WITHIN 0.003 mm/mm
7. BEND DEPRESSION IS ACCEPTED SO LONG AS IT DOES NOT AFFECT THE OVERALL COPLANARITY OF TAIL
8. COPLANARITY IS TO BE MEASURED BY RESTING THE SOLDER TAIL ON A FLAT SURFACE
9. IRREGULAR CIRCUIT CUTOFF WITHIN BREAKAWAY SECTION IS PERMISSIBLE.CUTTING OR CHIPPING OF THE MAIN BODY IS NOT ACCEPTABLE
10. CAP LOCATION IS CENTERED ALONG THE MATING ENDS AS SHOWN. TOP SURFACE OF CAP TO BE FLAT FOR THE PURPOSE OF PICK & PLACE BY VACUUM SUCTION NOZZLE
11. RECOMMENDED PCB THICKNESS IS 1.60mm±0.10
12. THE ABOVE CKT 6 IS FOR ILLUSTRATION PURPOSE ONLY
13. TUBE LENGTH AS PER STANDARD 560mm

EWR#1228, +0209	2010/05/20		
EC NO: S2010-0966	2005/03/29		
DRWN:ATSEE	2010/06/08		
CH'KD:PTLIM			
APPR:MLONG		DESCRIPTION	
B3		REV	

QUALITY SYMBOLS: F_A=0, F_C=0, F_P=0

GENERAL TOLERANCES (UNLESS SPECIFIED)

	mm	INCH
4 PLACES	± ---	± ---
3 PLACES	± ---	± ---
2 PLACES	± 0.2	± ---
1 PLACE	± ---	± ---
ANGULAR ± 3 °		

DRAFT WHERE APPLICABLE MUST REMAIN WITHIN DIMENSIONS

DIMENSION STYLE: MM ONLY	SCALE: NTS	DESIGN UNITS: METRIC	THIRD ANGLE PROJECTION
DRAWN BY: YLQIAO	DATE: 2005/03/14	TITLE: CUSTOM HEADER 2.54MM PITCH SINGLE ROW SINGLE WAFER SMT HEADER	
CHECKED BY: PTLIM	DATE: 2005/03/29		
APPROVED BY: MLONG	DATE: 2010/03/10	molex MOLEX INCORPORATED	
MATERIAL NO.: SEE TABLE		DOCUMENT NO.: SD-87898-001	SHEET NO.: 1 OF 20
SIZE: A3	THIS DRAWING CONTAINS INFORMATION THAT IS PROPRIETARY TO MOLEX INCORPORATED AND SHOULD NOT BE USED WITHOUT WRITTEN PERMISSION		

PACKAGING OPTION PART NO.						CKT SIZE	VOID POSITION	PLATING TYPE	DIMENSION				
TRAY WITHOUT CAP	TRAY WITH CAP	TUBE WITHOUT CAP	TUBE WITH CAP	TAPE & REEL WITHOUT CAP	TAPE & REEL WITH CAP				A	B	G	F	M
87898-0204	-------	-------	-------	-------	-------	2	-----	4	5.08	2.54	10.81	9.65	5.84
87898-0207	-------	-------	-------	-------	-------	2	-----	5	5.08	2.54	10.81	9.65	5.84
-------	-------	-------	89990-0208	-------	87898-0209	2	-----	6	5.08	2.54	10.81	9.65	5.84
87898-0301	-------	-------	-------	-------	-------	3	-----	1	7.62	5.08	10.81	9.65	5.84
87898-0302	-------	-------	-------	-------	-------	3	-----	2	7.62	5.08	10.81	9.65	5.84
87898-0304	-------	-------	-------	-------	-------	3	-----	4	7.62	5.08	10.81	9.65	5.84
87898-0305	-------	-------	-------	-------	-------	3	-----	5	7.62	5.08	10.81	9.65	5.84
87898-0306	-------	-------	-------	-------	-------	3	-----	6	7.62	5.08	10.81	9.65	5.84

EWR#1228, +0209
EC NO: S2010-0966
DRWN:ATSEE 2010/05/20
CH'KD:PTLIM 2005/03/29
APPR:MLONG 2010/06/08
DESCRIPTION
REV
B3

QUALITY SYMBOLS
F/A=0
F/C=0
F/P=0

GENERAL TOLERANCES (UNLESS SPECIFIED)

	mm	INCH
4 PLACES	± ---	± ---
3 PLACES	± ---	± ---
2 PLACES	± 0.2	± ---
1 PLACE	± ---	± ---
ANGULAR ± 3 °		

DRAFT WHERE APPLICABLE MUST REMAIN WITHIN DIMENSIONS

DIMENSION STYLE: MM ONLY
SCALE: NTS
DESIGN UNITS: METRIC
THIRD ANGLE PROJECTION

DRAWN BY: YLQIAO DATE: 2005/03/14
CHECKED BY: PTLIM DATE: 2005/03/29
APPROVED BY: MLONG DATE: 2010/03/10
MATERIAL NO.: SEE TABLE

TITLE: CUSTOM HEADER 2.54MM PITCH SINGLE ROW SINGLE WAFER SMT HEADER

molex MOLEX INCORPORATED

DOCUMENT NO.: SD-87898-001
SHEET NO.: 2 OF 20
SIZE: A3

THIS DRAWING CONTAINS INFORMATION THAT IS PROPRIETARY TO MOLEX INCORPORATED AND SHOULD NOT BE USED WITHOUT WRITTEN PERMISSION

PACKAGING OPTION PART NO.						CKT SIZE	VOID POSITION	PLATING TYPE	DIMENSION				
TRAY WITHOUT CAP	TRAY WITH CAP	TUBE WITHOUT CAP	TUBE WITH CAP	TAPE & REEL WITHOUT CAP	TAPE & REEL WITH CAP				A	B	G	F	M
-------	-------	87898-0421	87898-0431	-------	87898-0451	4	-----	1	10.16	7.62	10.81	9.65	5.84
-------	-------	87898-0422	87898-0432	-------	87898-0452	4	-----	2	10.16	7.62	10.81	9.65	5.84
-------	-------	87898-0424	87898-0434	-------	87898-0454	4	-----	4	10.16	7.62	10.81	9.65	5.84
-------	-------	87898-0425	87898-0435	-------	87898-0455	4	-----	5	10.16	7.62	10.81	9.65	5.84
-------	-------	87898-0426	87898-0436	-------	87898-0456	4	-----	6	10.16	7.62	10.81	9.65	5.84
-------	-------	87898-0521	87898-0531	-------	87898-0551	5	-----	1	12.70	10.16	10.81	9.65	5.84
-------	-------	87898-0522	87898-0532	-------	87898-0552	5	-----	2	12.70	10.16	10.81	9.65	5.84
-------	-------	87898-0524	87898-0534	-------	87898-0554	5	-----	4	12.70	10.16	10.81	9.65	5.84
-------	-------	87898-0525	87898-0535	-------	87898-0555	5	-----	5	12.70	10.16	10.81	9.65	5.84
-------	-------	87898-0526	87898-0536	-------	87898-0556	5	-----	6	12.70	10.16	10.81	9.65	5.84
-------	-------	87898-0621	87898-0631	-------	87898-0651	6	-----	1	15.24	12.70	10.81	9.65	5.84
-------	-------	87898-0622	87898-0632	-------	87898-0652	6	-----	2	15.24	12.70	10.81	9.65	5.84
-------	-------	87898-0624	87898-0634	-------	87898-0654	6	-----	4	15.24	12.70	10.81	9.65	5.84
-------	-------	87898-0625	87898-0635	-------	87898-0655	6	-----	5	15.24	12.70	10.81	9.65	5.84
-------	-------	87898-0626	87898-0636	-------	87898-0656	6	-----	6	15.24	12.70	10.81	9.65	5.84

EWR#1228, +0209
EC NO: S2010-0966 2010/05/20
DRWN:ATSEE 2005/03/29
CHKD:PTLIM 2010/06/08
APPR:MLONG
DESCRIPTION
B3
REV

QUALITY SYMBOLS
FA=0
FC=0
FP=0

GENERAL TOLERANCES (UNLESS SPECIFIED)

	mm	INCH
4 PLACES	± ---	± ---
3 PLACES	± ---	± ---
2 PLACES	± 0.2	± ---
1 PLACE	± ---	± ---
ANGULAR ± 3 °		

DRAFT WHERE APPLICABLE MUST REMAIN WITHIN DIMENSIONS

DIMENSION STYLE: MM ONLY
SCALE: NTS
DESIGN UNITS: METRIC
THIRD ANGLE PROJECTION

DRAWN BY: YLQIAO DATE: 2005/03/14
CHECKED BY: PTLIM DATE: 2005/03/29
APPROVED BY: MLONG DATE: 2010/03/10
MATERIAL NO.: SEE TABLE

TITLE: CUSTOM HEADER 2.54MM PITCH SINGLE ROW SINGLE WAFER SMT HEADER

molex MOLEX INCORPORATED

DOCUMENT NO.: SD-87898-001
SHEET NO.: 3 OF 20

SIZE: A3

THIS DRAWING CONTAINS INFORMATION THAT IS PROPRIETARY TO MOLEX INCORPORATED AND SHOULD NOT BE USED WITHOUT WRITTEN PERMISSION

tb_frame_A3_P_AM_T
Rev. F 2009/06/18

PACKAGING OPTION PART NO.						CKT SIZE	VOID POSITION	PLATING TYPE	DIMENSION				
TRAY WITHOUT CAP	TRAY WITH CAP	TUBE WITHOUT CAP	TUBE WITH CAP	TAPE & REEL WITHOUT CAP	TAPE & REEL WITH CAP				A	B	G	F	M
-------	-------	87898-0721	87898-0731	-------	87898-0751	7	-----	1	17.78	15.24	10.81	9.65	5.84
-------	-------	87898-0722	87898-0732	-------	87898-0752	7	-----	2	17.78	15.24	10.81	9.65	5.84
-------	-------	87898-0724	87898-0734	-------	87898-0754	7	-----	4	17.78	15.24	10.81	9.65	5.84
-------	-------	87898-0725	87898-0735	-------	87898-0755	7	-----	5	17.78	15.24	10.81	9.65	5.84
-------	-------	87898-0726	87898-0736	-------	87898-0756	7	-----	6	17.78	15.24	10.81	9.65	5.84
-------	-------	87898-0821	87898-0831	-------	87898-0851	8	-----	1	20.32	17.78	10.81	9.65	5.84
-------	-------	87898-0822	87898-0832	-------	87898-0852	8	-----	2	20.32	17.78	10.81	9.65	5.84
-------	-------	87898-0824	87898-0834	-------	87898-0854	8	-----	4	20.32	17.78	10.81	9.65	5.84
-------	-------	87898-0825	87898-0835	-------	87898-0855	8	-----	5	20.32	17.78	10.81	9.65	5.84
-------	-------	87898-0826	87898-0836	-------	87898-0856	8	-----	6	20.32	17.78	10.81	9.65	5.84
-------	-------	87898-0921	87898-0931	-------	87898-0951	9	-----	1	22.86	20.32	10.81	9.65	5.84
-------	-------	87898-0922	87898-0932	-------	87898-0952	9	-----	2	22.86	20.32	10.81	9.65	5.84
-------	-------	87898-0924	87898-0934	-------	87898-0954	9	-----	4	22.86	20.32	10.81	9.65	5.84
-------	-------	87898-0925	87898-0935	-------	87898-0955	9	-----	5	22.86	20.32	10.81	9.65	5.84
-------	-------	87898-0926	87898-0936	-------	87898-0956	9	-----	6	22.86	20.32	10.81	9.65	5.84

EWR#1228, +0209
EC NO: S2010-0966
DRWN:ATSEE 2010/05/20
CH'KD:PTLIM 2005/03/29
APPR:MLONG 2010/06/08
DESCRIPTION
B3
REV

QUALITY SYMBOLS
F_A=0
F_C=0
F_P=0

GENERAL TOLERANCES (UNLESS SPECIFIED)

	mm	INCH
4 PLACES	± ---	± ---
3 PLACES	± ---	± ---
2 PLACES	± 0.2	± ---
1 PLACE	± ---	± ---
ANGULAR ± 3 °		

DRAFT WHERE APPLICABLE MUST REMAIN WITHIN DIMENSIONS

DIMENSION STYLE: MM ONLY
SCALE: NTS
DESIGN UNITS: METRIC
THIRD ANGLE PROJECTION

DRAWN BY: YLQIAO DATE: 2005/03/14
CHECKED BY: PTLIM DATE: 2005/03/29
APPROVED BY: MLONG DATE: 2010/03/10
MATERIAL NO.: SEE TABLE

TITLE: CUSTOM HEADER 2.54MM PITCH SINGLE ROW SINGLE WAFER SMT HEADER

molex MOLEX INCORPORATED

DOCUMENT NO.: SD-87898-001
SHEET NO.: 4 OF 20

SIZE: A3

THIS DRAWING CONTAINS INFORMATION THAT IS PROPRIETARY TO MOLEX INCORPORATED AND SHOULD NOT BE USED WITHOUT WRITTEN PERMISSION

PACKAGING OPTION PART NO.						CKT SIZE	VOID POSITION	PLATING TYPE	DIMENSION				
TRAY WITHOUT CAP	TRAY WITH CAP	TUBE WITHOUT CAP	TUBE WITH CAP	TAPE & REEL WITHOUT CAP	TAPE & REEL WITH CAP				A	B	G	F	M
-------	-------	87898-1021	87898-1031	-------	87898-1051	10	-----	1	25.40	22.86	10.81	9.65	5.84
-------	-------	87898-1022	87898-1032	-------	87898-1052	10	-----	2	25.40	22.86	10.81	9.65	5.84
-------	-------	87898-1024	87898-1034	-------	87898-1054	10	-----	4	25.40	22.86	10.81	9.65	5.84
-------	-------	87898-1025	87898-1035	-------	87898-1055	10	-----	5	25.40	22.86	10.81	9.65	5.84
-------	-------	87898-1026	87898-1036	-------	87898-1056	10	-----	6	25.40	22.86	10.81	9.65	5.84
-------	-------	87898-1121	87898-1131	-------	87898-1151	11	-----	1	27.94	25.40	10.81	9.65	5.84
-------	-------	87898-1122	87898-1132	-------	87898-1152	11	-----	2	27.94	25.40	10.81	9.65	5.84
-------	-------	87898-1124	87898-1134	-------	87898-1154	11	-----	4	27.94	25.40	10.81	9.65	5.84
-------	-------	87898-1125	87898-1135	-------	87898-1155	11	-----	5	27.94	25.40	10.81	9.65	5.84
-------	-------	87898-1126	87898-1136	-------	87898-1156	11	-----	6	27.94	25.40	10.81	9.65	5.84
-------	-------	87898-1221	87898-1231	-------	87898-1251	12	-----	1	30.48	27.94	10.81	9.65	5.84
-------	-------	87898-1222	87898-1232	-------	87898-1252	12	-----	2	30.48	27.94	10.81	9.65	5.84
-------	-------	87898-1224	87898-1234	-------	87898-1254	12	-----	4	30.48	27.94	10.81	9.65	5.84
-------	-------	87898-1225	87898-1235	-------	87898-1255	12	-----	5	30.48	27.94	10.81	9.65	5.84
-------	-------	87898-1226	87898-1236	-------	87898-1256	12	-----	6	30.48	27.94	10.81	9.65	5.84

EWR#1228, +0209
EC NO: S2010-0966
DRWN:ATSEE 2010/05/20
CH'KD:PTLIM 2005/03/29
APPR:MLONG 2010/06/08
DESCRIPTION
REV
B3

QUALITY SYMBOLS
F_A=0
F_C=0
F_P=0

GENERAL TOLERANCES (UNLESS SPECIFIED)

	mm	INCH
4 PLACES	± ---	± ---
3 PLACES	± ---	± ---
2 PLACES	± 0.2	± ---
1 PLACE	± ---	± ---

ANGULAR ± 3 °

DRAFT WHERE APPLICABLE MUST REMAIN WITHIN DIMENSIONS

DIMENSION STYLE: MM ONLY
SCALE: NTS
DESIGN UNITS: METRIC
THIRD ANGLE PROJECTION

DRAWN BY: YLQIAO DATE: 2005/03/14
CHECKED BY: PTLIM DATE: 2005/03/29
APPROVED BY: MLONG DATE: 2010/03/10

TITLE: CUSTOM HEADER 2.54MM PITCH SINGLE ROW SINGLE WAFER SMT HEADER

molex MOLEX INCORPORATED

MATERIAL NO.: SEE TABLE
DOCUMENT NO.: SD-87898-001
SHEET NO.: 5 OF 20
SIZE: A3

THIS DRAWING CONTAINS INFORMATION THAT IS PROPRIETARY TO MOLEX INCORPORATED AND SHOULD NOT BE USED WITHOUT WRITTEN PERMISSION

PACKAGING OPTION PART NO.						CKT SIZE	VOID POSITION	PLATING TYPE	DIMENSION				
TRAY WITHOUT CAP	TRAY WITH CAP	TUBE WITHOUT CAP	TUBE WITH CAP	TAPE & REEL WITHOUT CAP	TAPE & REEL WITH CAP				A	B	G	F	M
-------	-------	87898-1321	87898-1331	-------	87898-1351	13	-----	1	33.02	30.48	10.81	9.65	5.84
-------	-------	87898-1322	87898-1332	-------	87898-1352	13	-----	2	33.02	30.48	10.81	9.65	5.84
-------	-------	87898-1324	87898-1334	-------	87898-1354	13	-----	4	33.02	30.48	10.81	9.65	5.84
-------	-------	87898-1325	87898-1335	-------	87898-1355	13	-----	5	33.02	30.48	10.81	9.65	5.84
-------	-------	87898-1326	87898-1336	-------	87898-1356	13	-----	6	33.02	30.48	10.81	9.65	5.84
-------	-------	87898-1421	87898-1431	-------	87898-1451	14	-----	1	35.56	33.02	10.81	9.65	5.84
-------	-------	87898-1422	87898-1432	-------	87898-1452	14	-----	2	35.56	33.02	10.81	9.65	5.84
-------	-------	87898-1424	87898-1434	-------	87898-1454	14	-----	4	35.56	33.02	10.81	9.65	5.84
-------	-------	87898-1425	87898-1435	-------	87898-1455	14	-----	5	35.56	33.02	10.81	9.65	5.84
-------	-------	87898-1426	87898-1436	-------	87898-1456	14	-----	6	35.56	33.02	10.81	9.65	5.84
-------	-------	87898-1521	87898-1531	-------	87898-1551	15	-----	1	38.10	35.56	10.81	9.65	5.84
-------	-------	87898-1522	87898-1532	-------	87898-1552	15	-----	2	38.10	35.56	10.81	9.65	5.84
-------	-------	87898-1524	87898-1534	-------	87898-1554	15	-----	4	38.10	35.56	10.81	9.65	5.84
-------	-------	87898-1525	87898-1535	-------	87898-1555	15	-----	5	38.10	35.56	10.81	9.65	5.84
-------	-------	87898-1526	87898-1536	-------	87898-1556	15	-----	6	38.10	35.56	10.81	9.65	5.84

EWR#1228, +0209
EC NO: S2010-0966
DRWN:ATSEE 2010/05/20
CH'KD:PTLIM 2005/03/29
APPR:MLONG 2010/06/08
DESCRIPTION
REV
B3

QUALITY SYMBOLS
F_A=0
F_C=0
F_P=0

GENERAL TOLERANCES (UNLESS SPECIFIED)

	mm	INCH
4 PLACES	± ---	± ---
3 PLACES	± ---	± ---
2 PLACES	± 0.2	± ---
1 PLACE	± ---	± ---

ANGULAR ± 3 °

DRAFT WHERE APPLICABLE MUST REMAIN WITHIN DIMENSIONS

DIMENSION STYLE: MM ONLY
SCALE: NTS
DESIGN UNITS: METRIC
THIRD ANGLE PROJECTION

DRAWN BY: YLQIAO DATE: 2005/03/14
CHECKED BY: PTLIM DATE: 2005/03/29
APPROVED BY: MLONG DATE: 2010/03/10

TITLE: CUSTOM HEADER 2.54MM PITCH SINGLE ROW SINGLE WAFER SMT HEADER

molex MOLEX INCORPORATED

MATERIAL NO.: SEE TABLE
DOCUMENT NO.: SD-87898-001
SHEET NO.: 6 OF 20
SIZE: A3

THIS DRAWING CONTAINS INFORMATION THAT IS PROPRIETARY TO MOLEX INCORPORATED AND SHOULD NOT BE USED WITHOUT WRITTEN PERMISSION

tb_frame_A3_P_AM_T
Rev. F 2009/06/18

PACKAGING OPTION PART NO.						CKT SIZE	VOID POSITION	PLATING TYPE	DIMENSION				
TRAY WITHOUT CAP	TRAY WITH CAP	TUBE WITHOUT CAP	TUBE WITH CAP	TAPE & REEL WITHOUT CAP	TAPE & REEL WITH CAP				A	B	G	F	M
-------	-------	87898-1621	87898-1631	-------	87898-1651	16	-----	1	40.64	38.10	10.81	9.65	5.84
-------	-------	87898-1622	87898-1632	-------	87898-1652	16	-----	2	40.64	38.10	10.81	9.65	5.84
-------	-------	87898-1624	87898-1634	-------	87898-1654	16	-----	4	40.64	38.10	10.81	9.65	5.84
-------	-------	87898-1625	87898-1635	-------	87898-1655	16	-----	5	40.64	38.10	10.81	9.65	5.84
-------	-------	87898-1626	87898-1636	-------	87898-1656	16	-----	6	40.64	38.10	10.81	9.65	5.84
-------	-------	87898-1721	87898-1731	-------	87898-1751	17	-----	1	43.18	40.64	10.81	9.65	5.84
-------	-------	87898-1722	87898-1732	-------	87898-1752	17	-----	2	43.18	40.64	10.81	9.65	5.84
-------	-------	87898-1724	87898-1734	-------	87898-1754	17	-----	4	43.18	40.64	10.81	9.65	5.84
-------	-------	87898-1725	87898-1735	-------	87898-1755	17	-----	5	43.18	40.64	10.81	9.65	5.84
-------	-------	87898-1726	87898-1736	-------	87898-1756	17	-----	6	43.18	40.64	10.81	9.65	5.84
-------	-------	87898-1821	87898-1831	-------	87898-1851	18	-----	1	45.72	43.18	10.81	9.65	5.84
-------	-------	87898-1822	87898-1832	-------	87898-1852	18	-----	2	45.72	43.18	10.81	9.65	5.84
-------	-------	87898-1824	87898-1834	-------	87898-1854	18	-----	4	45.72	43.18	10.81	9.65	5.84
-------	-------	87898-1825	87898-1835	-------	87898-1855	18	-----	5	45.72	43.18	10.81	9.65	5.84
-------	-------	87898-1826	87898-1836	-------	87898-1856	18	-----	6	45.72	43.18	10.81	9.65	5.84

EWR#1228, +0209
EC NO: S2010-0966
DRWN:ATSEE 2010/05/20
CH'KD:PTLIM 2005/03/29
APPR:MLONG 2010/06/08
DESCRIPTION
B3
REV

QUALITY SYMBOLS
F_A=0
F_C=0
F_P=0

GENERAL TOLERANCES (UNLESS SPECIFIED)

	mm	INCH
4 PLACES	± ---	± ---
3 PLACES	± ---	± ---
2 PLACES	± 0.2	± ---
1 PLACE	± ---	± ---
ANGULAR ± 3 °		

DRAFT WHERE APPLICABLE MUST REMAIN WITHIN DIMENSIONS

DIMENSION STYLE: MM ONLY
SCALE: NTS
DESIGN UNITS: METRIC
THIRD ANGLE PROJECTION

DRAWN BY: YLQIAO DATE: 2005/03/14
CHECKED BY: PTLIM DATE: 2005/03/29
APPROVED BY: MLONG DATE: 2010/03/10

TITLE: CUSTOM HEADER 2.54MM PITCH SINGLE ROW SINGLE WAFER SMT HEADER

molex MOLEX INCORPORATED

MATERIAL NO.: SEE TABLE
DOCUMENT NO.: SD-87898-001
SHEET NO.: 7 OF 20
SIZE: A3

THIS DRAWING CONTAINS INFORMATION THAT IS PROPRIETARY TO MOLEX INCORPORATED AND SHOULD NOT BE USED WITHOUT WRITTEN PERMISSION

PACKAGING OPTION PART NO.						CKT SIZE	VOID POSITION	PLATING TYPE	DIMENSION				
TRAY WITHOUT CAP	TRAY WITH CAP	TUBE WITHOUT CAP	TUBE WITH CAP	TAPE & REEL WITHOUT CAP	TAPE & REEL WITH CAP				A	B	G	F	M
-------	-------	87898-1921	87898-1931	-------	87898-1951	19	-----	1	48.26	45.72	10.81	9.65	5.84
-------	-------	87898-1922	87898-1932	-------	87898-1952	19	-----	2	48.26	45.72	10.81	9.65	5.84
-------	-------	87898-1924	87898-1934	-------	87898-1954	19	-----	4	48.26	45.72	10.81	9.65	5.84
-------	-------	87898-1925	87898-1935	-------	87898-1955	19	-----	5	48.26	45.72	10.81	9.65	5.84
-------	-------	87898-1926	87898-1936	-------	87898-1956	19	-----	6	48.26	45.72	10.81	9.65	5.84
-------	-------	87898-2021	87898-2031	-------	87898-2051	20	-----	1	50.80	48.26	10.81	9.65	5.84
-------	-------	87898-2022	87898-2032	-------	87898-2052	20	-----	2	50.80	48.26	10.81	9.65	5.84
-------	-------	87898-2024	87898-2034	-------	87898-2054	20	-----	4	50.80	48.26	10.81	9.65	5.84
-------	-------	87898-2025	87898-2035	-------	87898-2055	20	-----	5	50.80	48.26	10.81	9.65	5.84
-------	-------	87898-2026	87898-2036	-------	87898-2056	20	-----	6	50.80	48.26	10.81	9.65	5.84
-------	-------	87898-2121	87898-2131	-------	87898-2151	21	-----	1	53.34	50.80	10.81	9.65	5.84
-------	-------	87898-2122	87898-2132	-------	87898-2152	21	-----	2	53.34	50.80	10.81	9.65	5.84
-------	-------	87898-2124	87898-2134	-------	87898-2154	21	-----	4	53.34	50.80	10.81	9.65	5.84
-------	-------	87898-2125	87898-2135	-------	87898-2155	21	-----	5	53.34	50.80	10.81	9.65	5.84
-------	-------	87898-2126	87898-2136	-------	87898-2156	21	-----	6	53.34	50.80	10.81	9.65	5.84

EWR#1228, +0209
EC NO: S2010-0966
DRWN:ATSEE 2010/05/20
CH'KD:PTLIM 2005/03/29
APPR:MLONG 2010/06/08
DESCRIPTION
REV
B3

QUALITY SYMBOLS
FA=0
FC=0
FP=0

GENERAL TOLERANCES (UNLESS SPECIFIED)

	mm	INCH
4 PLACES	± ---	± ---
3 PLACES	± ---	± ---
2 PLACES	± 0.2	± ---
1 PLACE	± ---	± ---

ANGULAR ± 3 °

DRAFT WHERE APPLICABLE MUST REMAIN WITHIN DIMENSIONS

DIMENSION STYLE: MM ONLY
SCALE: NTS
DESIGN UNITS: METRIC
THIRD ANGLE PROJECTION

DRAWN BY: YLQIAO DATE: 2005/03/14
CHECKED BY: PTLIM DATE: 2005/03/29
APPROVED BY: MLONG DATE: 2010/03/10

TITLE: CUSTOM HEADER 2.54MM PITCH SINGLE ROW SINGLE WAFER SMT HEADER

molex MOLEX INCORPORATED

MATERIAL NO.: SEE TABLE
DOCUMENT NO.: SD-87898-001
SHEET NO.: 8 OF 20
SIZE: A3

THIS DRAWING CONTAINS INFORMATION THAT IS PROPRIETARY TO MOLEX INCORPORATED AND SHOULD NOT BE USED WITHOUT WRITTEN PERMISSION

PACKAGING OPTION PART NO.						CKT SIZE	VOID POSITION	PLATING TYPE	DIMENSION				
TRAY WITHOUT CAP	TRAY WITH CAP	TUBE WITHOUT CAP	TUBE WITH CAP	TAPE & REEL WITHOUT CAP	TAPE & REEL WITH CAP				A	B	G	F	M
-------	-------	87898-2221	87898-2231	-------	-------	22	-----	1	55.88	53.34	10.81	9.65	5.84
-------	-------	87898-2222	87898-2232	-------	-------	22	-----	2	55.88	53.34	10.81	9.65	5.84
-------	-------	87898-2224	87898-2234	-------	-------	22	-----	4	55.88	53.34	10.81	9.65	5.84
-------	-------	87898-2225	87898-2235	-------	-------	22	-----	5	55.88	53.34	10.81	9.65	5.84
-------	-------	87898-2226	87898-2236	-------	-------	22	-----	6	55.88	53.34	10.81	9.65	5.84
-------	-------	87898-2321	87898-2331	-------	-------	23	-----	1	58.42	55.88	10.81	9.65	5.84
-------	-------	87898-2322	87898-2332	-------	-------	23	-----	2	58.42	55.88	10.81	9.65	5.84
-------	-------	87898-2324	87898-2334	-------	-------	23	-----	4	58.42	55.88	10.81	9.65	5.84
-------	-------	87898-2325	87898-2335	-------	-------	23	-----	5	58.42	55.88	10.81	9.65	5.84
-------	-------	87898-2326	87898-2336	-------	-------	23	-----	6	58.42	55.88	10.81	9.65	5.84
-------	-------	87898-2421	87898-2431	-------	-------	24	-----	1	60.96	58.42	10.81	9.65	5.84
-------	-------	87898-2422	87898-2432	-------	-------	24	-----	2	60.96	58.42	10.81	9.65	5.84
-------	-------	87898-2424	87898-2434	-------	-------	24	-----	4	60.96	58.42	10.81	9.65	5.84
-------	-------	87898-2425	87898-2435	-------	-------	24	-----	5	60.96	58.42	10.81	9.65	5.84
-------	-------	87898-2426	87898-2436	-------	-------	24	-----	6	60.96	58.42	10.81	9.65	5.84

EWR#1228, +0209
EC NO: S2010-0966
DRWN:ATSEE 2010/05/20
CHKD:PTLIM 2005/03/29
APPR:MLONG 2010/06/08
DESCRIPTION
B3
REV

QUALITY SYMBOLS
FA=0
FC=0
FP=0

GENERAL TOLERANCES (UNLESS SPECIFIED)

	mm	INCH
4 PLACES	± ---	± ---
3 PLACES	± ---	± ---
2 PLACES	± 0.2	± ---
1 PLACE	± ---	± ---
ANGULAR ± 3 °		

DRAFT WHERE APPLICABLE MUST REMAIN WITHIN DIMENSIONS

DIMENSION STYLE: MM ONLY
SCALE: NTS
DESIGN UNITS: METRIC
THIRD ANGLE PROJECTION

DRAWN BY: YLQIAO DATE: 2005/03/14
CHECKED BY: PTLIM DATE: 2005/03/29
APPROVED BY: MLONG DATE: 2010/03/10
MATERIAL NO.: SEE TABLE

TITLE: CUSTOM HEADER 2.54MM PITCH SINGLE ROW SINGLE WAFER SMT HEADER

MOLEX INCORPORATED

DOCUMENT NO.: SD-87898-001
SHEET NO.: 9 OF 20
SIZE: A3

THIS DRAWING CONTAINS INFORMATION THAT IS PROPRIETARY TO MOLEX INCORPORATED AND SHOULD NOT BE USED WITHOUT WRITTEN PERMISSION

tb_frame_A3_P_AM_T
Rev. F 2009/06/18

PACKAGING OPTION PART NO.						CKT SIZE	VOID POSITION	PLATING TYPE	DIMENSION				
TRAY WITHOUT CAP	TRAY WITH CAP	TUBE WITHOUT CAP	TUBE WITH CAP	TAPE & REEL WITHOUT CAP	TAPE & REEL WITH CAP				A	B	G	F	M
-------	-------	87898-2521	87898-2531	-------	-------	25	-----	1	63.50	60.96	10.81	9.65	5.84
-------	-------	87898-2522	87898-2532	-------	-------	25	-----	2	63.50	60.96	10.81	9.65	5.84
-------	-------	87898-2524	87898-2534	-------	-------	25	-----	4	63.50	60.96	10.81	9.65	5.84
-------	-------	87898-2525	87898-2535	-------	-------	25	-----	5	63.50	60.96	10.81	9.65	5.84
-------	-------	87898-2526	87898-2536	-------	-------	25	-----	6	63.50	60.96	10.81	9.65	5.84
-------	-------	87898-2621	87898-2631	-------	-------	26	-----	1	66.04	63.50	10.81	9.65	5.84
-------	-------	87898-2622	87898-2632	-------	-------	26	-----	2	66.04	63.50	10.81	9.65	5.84
-------	-------	87898-2624	87898-2634	-------	-------	26	-----	4	66.04	63.50	10.81	9.65	5.84
-------	-------	87898-2625	87898-2635	-------	-------	26	-----	5	66.04	63.50	10.81	9.65	5.84
-------	-------	87898-2626	87898-2636	-------	-------	26	-----	6	66.04	63.50	10.81	9.65	5.84
-------	-------	87898-2721	87898-2731	-------	-------	27	-----	1	68.58	66.04	10.81	9.65	5.84
-------	-------	87898-2722	87898-2732	-------	-------	27	-----	2	68.58	66.04	10.81	9.65	5.84
-------	-------	87898-2724	87898-2734	-------	-------	27	-----	4	68.58	66.04	10.81	9.65	5.84
-------	-------	87898-2725	87898-2735	-------	-------	27	-----	5	68.58	66.04	10.81	9.65	5.84
-------	-------	87898-2726	87898-2736	-------	-------	27	-----	6	68.58	66.04	10.81	9.65	5.84

EWR#1228, +0209
EC NO: S2010-0966
DRWN:ATSEE 2010/05/20
CH'KD:PTLIM 2005/03/29
APPR:MLONG 2010/06/08
DESCRIPTION
B3
REV

QUALITY SYMBOLS
FA=0
FC=0
FP=0

GENERAL TOLERANCES (UNLESS SPECIFIED)

	mm	INCH
4 PLACES	± ---	± ---
3 PLACES	± ---	± ---
2 PLACES	± 0.2	± ---
1 PLACE	± ---	± ---
ANGULAR ± 3 °		

DRAFT WHERE APPLICABLE MUST REMAIN WITHIN DIMENSIONS

DIMENSION STYLE: MM ONLY
SCALE: NTS
DESIGN UNITS: METRIC
THIRD ANGLE PROJECTION

DRAWN BY: YLQIAO DATE: 2005/03/14
CHECKED BY: PTLIM DATE: 2005/03/29
APPROVED BY: MLONG DATE: 2010/03/10
MATERIAL NO.: SEE TABLE

TITLE: CUSTOM HEADER 2.54MM PITCH SINGLE ROW SINGLE WAFER SMT HEADER

molex MOLEX INCORPORATED

DOCUMENT NO.: SD-87898-001
SHEET NO.: 10 OF 20
SIZE: A3

THIS DRAWING CONTAINS INFORMATION THAT IS PROPRIETARY TO MOLEX INCORPORATED AND SHOULD NOT BE USED WITHOUT WRITTEN PERMISSION

PACKAGING OPTION PART NO.						CKT SIZE	VOID POSITION	PLATING TYPE	DIMENSION				
TRAY WITHOUT CAP	TRAY WITH CAP	TUBE WITHOUT CAP	TUBE WITH CAP	TAPE & REEL WITHOUT CAP	TAPE & REEL WITH CAP				A	B	G	F	M
-------	-------	87898-2821	87898-2831	-------	-------	28	-----	1	71.12	68.58	10.81	9.65	5.84
-------	-------	87898-2822	87898-2832	-------	-------	28	-----	2	71.12	68.58	10.81	9.65	5.84
-------	-------	87898-2824	87898-2834	-------	-------	28	-----	4	71.12	68.58	10.81	9.65	5.84
-------	-------	87898-2825	87898-2835	-------	-------	28	-----	5	71.12	68.58	10.81	9.65	5.84
-------	-------	87898-2826	87898-2836	-------	-------	28	-----	6	71.12	68.58	10.81	9.65	5.84
-------	-------	87898-2921	87898-2931	-------	-------	29	-----	1	73.66	71.12	10.81	9.65	5.84
-------	-------	87898-2922	87898-2932	-------	-------	29	-----	2	73.66	71.12	10.81	9.65	5.84
-------	-------	87898-2924	87898-2934	-------	-------	29	-----	4	73.66	71.12	10.81	9.65	5.84
-------	-------	87898-2925	87898-2935	-------	-------	29	-----	5	73.66	71.12	10.81	9.65	5.84
-------	-------	87898-2926	87898-2936	-------	-------	29	-----	6	73.66	71.12	10.81	9.65	5.84
-------	-------	87898-3021	87898-3031	-------	-------	30	-----	1	76.20	73.66	10.81	9.65	5.84
-------	-------	87898-3022	87898-3032	-------	-------	30	-----	2	76.20	73.66	10.81	9.65	5.84
-------	-------	87898-3024	87898-3034	-------	-------	30	-----	4	76.20	73.66	10.81	9.65	5.84
-------	-------	87898-3025	87898-3035	-------	-------	30	-----	5	76.20	73.66	10.81	9.65	5.84
-------	-------	87898-3026	87898-3036	-------	-------	30	-----	6	76.20	73.66	10.81	9.65	5.84

EWR#1228, +0209
EC NO: S2010-0966
DRWN:ATSEE 2010/05/20
CH'KD:PTLIM 2005/03/29
APPR:MLONG 2010/06/08
DESCRIPTION
REV
B3

QUALITY SYMBOLS
F_A=0
F_C=0
F_P=0

GENERAL TOLERANCES (UNLESS SPECIFIED)

	mm	INCH
4 PLACES	± ---	± ---
3 PLACES	± ---	± ---
2 PLACES	± 0.2	± ---
1 PLACE	± ---	± ---

ANGULAR ± 3 °

DRAFT WHERE APPLICABLE MUST REMAIN WITHIN DIMENSIONS

DIMENSION STYLE: MM ONLY
SCALE: NTS
DESIGN UNITS: METRIC
THIRD ANGLE PROJECTION

DRAWN BY: YLQIAO DATE: 2005/03/14
CHECKED BY: PTLIM DATE: 2005/03/29
APPROVED BY: MLONG DATE: 2010/03/10

TITLE: CUSTOM HEADER 2.54MM PITCH SINGLE ROW SINGLE WAFER SMT HEADER

molex MOLEX INCORPORATED

MATERIAL NO.: SEE TABLE
DOCUMENT NO.: SD-87898-001
SHEET NO.: 11 OF 20
SIZE: A3

THIS DRAWING CONTAINS INFORMATION THAT IS PROPRIETARY TO MOLEX INCORPORATED AND SHOULD NOT BE USED WITHOUT WRITTEN PERMISSION

PACKAGING OPTION PART NO.						CKT SIZE	VOID POSITION	PLATING TYPE	DIMENSION				
TRAY WITHOUT CAP	TRAY WITH CAP	TUBE WITHOUT CAP	TUBE WITH CAP	TAPE & REEL WITHOUT CAP	TAPE & REEL WITH CAP				A	B	G	F	M
-------	-------	87898-3121	87898-3131	-------	-------	31	-----	1	78.74	76.20	10.81	9.65	5.84
-------	-------	87898-3122	87898-3132	-------	-------	31	-----	2	78.74	76.20	10.81	9.65	5.84
-------	-------	87898-3124	87898-3134	-------	-------	31	-----	4	78.74	76.20	10.81	9.65	5.84
-------	-------	87898-3125	87898-3135	-------	-------	31	-----	5	78.74	76.20	10.81	9.65	5.84
-------	-------	87898-3126	87898-3136	-------	-------	31	-----	6	78.74	76.20	10.81	9.65	5.84
-------	-------	87898-3221	87898-3231	-------	-------	32	-----	1	81.28	78.74	10.81	9.65	5.84
-------	-------	87898-3222	87898-3232	-------	-------	32	-----	2	81.28	78.74	10.81	9.65	5.84
-------	-------	87898-3224	87898-3234	-------	-------	32	-----	4	81.28	78.74	10.81	9.65	5.84
-------	-------	87898-3225	87898-3235	-------	-------	32	-----	5	81.28	78.74	10.81	9.65	5.84
-------	-------	87898-3226	87898-3236	-------	-------	32	-----	6	81.28	78.74	10.81	9.65	5.84
-------	-------	87898-3321	87898-3331	-------	-------	33	-----	1	83.82	81.28	10.81	9.65	5.84
-------	-------	87898-3322	87898-3332	-------	-------	33	-----	2	83.82	81.28	10.81	9.65	5.84
-------	-------	87898-3324	87898-3334	-------	-------	33	-----	4	83.82	81.28	10.81	9.65	5.84
-------	-------	87898-3325	87898-3335	-------	-------	33	-----	5	83.82	81.28	10.81	9.65	5.84
-------	-------	87898-3326	87898-3336	-------	-------	33	-----	6	83.82	81.28	10.81	9.65	5.84

EWR#1228, +0209
EC NO: S2010-0966
DRWN:ATSEE 2010/05/20
CH'KD:PTLIM 2005/03/29
APPR:MLONG 2010/06/08
DESCRIPTION
B3
REV

QUALITY SYMBOLS
F_A=0
F_C=0
F_P=0

GENERAL TOLERANCES (UNLESS SPECIFIED)

	mm	INCH
4 PLACES	± ---	± ---
3 PLACES	± ---	± ---
2 PLACES	± 0.2	± ---
1 PLACE	± ---	± ---

ANGULAR ± 3 °

DRAFT WHERE APPLICABLE MUST REMAIN WITHIN DIMENSIONS

DIMENSION STYLE: MM ONLY
SCALE: NTS
DESIGN UNITS: METRIC
THIRD ANGLE PROJECTION

DRAWN BY: YLQIAO DATE: 2005/03/14
CHECKED BY: PTLIM DATE: 2005/03/29
APPROVED BY: MLONG DATE: 2010/03/10
MATERIAL NO.: SEE TABLE

TITLE: CUSTOM HEADER 2.54MM PITCH SINGLE ROW SINGLE WAFER SMT HEADER

molex MOLEX INCORPORATED

DOCUMENT NO.: SD-87898-001
SHEET NO.: 12 OF 20
SIZE: A3

THIS DRAWING CONTAINS INFORMATION THAT IS PROPRIETARY TO MOLEX INCORPORATED AND SHOULD NOT BE USED WITHOUT WRITTEN PERMISSION

tb_frame_A3_P_AM_T
Rev. F 2009/06/18

PACKAGING OPTION PART NO.						CKT SIZE	VOID POSITION	PLATING TYPE	DIMENSION				
TRAY WITHOUT CAP	TRAY WITH CAP	TUBE WITHOUT CAP	TUBE WITH CAP	TAPE & REEL WITHOUT CAP	TAPE & REEL WITH CAP				A	B	G	F	M
-------	-------	87898-3421	87898-3431	-------	-------	34	-----	1	86.36	83.82	10.81	9.65	5.84
-------	-------	87898-3422	87898-3432	-------	-------	34	-----	2	86.36	83.82	10.81	9.65	5.84
-------	-------	87898-3424	87898-3434	-------	-------	34	-----	4	86.36	83.82	10.81	9.65	5.84
-------	-------	87898-3425	87898-3435	-------	-------	34	-----	5	86.36	83.82	10.81	9.65	5.84
-------	-------	87898-3426	87898-3436	-------	-------	34	-----	6	86.36	83.82	10.81	9.65	5.84
-------	-------	87898-3521	87898-3531	-------	-------	35	-----	1	88.90	86.36	10.81	9.65	5.84
-------	-------	87898-3522	87898-3532	-------	-------	35	-----	2	88.90	86.36	10.81	9.65	5.84
-------	-------	87898-3524	87898-3534	-------	-------	35	-----	4	88.90	86.36	10.81	9.65	5.84
-------	-------	87898-3525	87898-3535	-------	-------	35	-----	5	88.90	86.36	10.81	9.65	5.84
-------	-------	87898-3526	87898-3536	-------	-------	35	-----	6	88.90	86.36	10.81	9.65	5.84
-------	-------	87898-3621	87898-3631	-------	-------	36	-----	1	91.44	88.90	10.81	9.65	5.84
-------	-------	87898-3622	87898-3632	-------	-------	36	-----	2	91.44	88.90	10.81	9.65	5.84
-------	-------	87898-3624	87898-3634	-------	-------	36	-----	4	91.44	88.90	10.81	9.65	5.84
-------	-------	87898-3625	87898-3635	-------	-------	36	-----	5	91.44	88.90	10.81	9.65	5.84
-------	-------	87898-3626	87898-3636	-------	-------	36	-----	6	91.44	88.90	10.81	9.65	5.84

EWR#1228, +0209
EC NO: S2010-0966
DRWN:ATSEE 2010/05/20
CH'KD:PTLIM 2005/03/29
APPR:MLONG 2010/06/08
DESCRIPTION
REV
B3

QUALITY SYMBOLS
F_A=0
F_C=0
F_P=0

GENERAL TOLERANCES (UNLESS SPECIFIED)

	mm	INCH
4 PLACES	± ---	± ---
3 PLACES	± ---	± ---
2 PLACES	± 0.2	± ---
1 PLACE	± ---	± ---

ANGULAR ± 3 °

DRAFT WHERE APPLICABLE MUST REMAIN WITHIN DIMENSIONS

DIMENSION STYLE: MM ONLY
SCALE: NTS
DESIGN UNITS: METRIC
THIRD ANGLE PROJECTION

DRAWN BY: YLQIAO DATE: 2005/03/14
CHECKED BY: PTLIM DATE: 2005/03/29
APPROVED BY: MLONG DATE: 2010/03/10

TITLE: CUSTOM HEADER 2.54MM PITCH SINGLE ROW SINGLE WAFER SMT HEADER

molex MOLEX INCORPORATED

MATERIAL NO.: SEE TABLE
DOCUMENT NO.: SD-87898-001
SHEET NO.: 13 OF 20
SIZE: A3

THIS DRAWING CONTAINS INFORMATION THAT IS PROPRIETARY TO MOLEX INCORPORATED AND SHOULD NOT BE USED WITHOUT WRITTEN PERMISSION

PACKAGING OPTION PART NO.						CKT SIZE	VOID POSITION	PLATING TYPE	DIMENSION				
TRAY WITHOUT CAP	TRAY WITH CAP	TUBE WITHOUT CAP	TUBE WITH CAP	TAPE & REEL WITHOUT CAP	TAPE & REEL WITH CAP				A	B	G	F	M
-------	-------	87898-3721	87898-3731	-------	-------	37	-----	1	93.98	91.44	10.81	9.65	5.84
-------	-------	87898-3722	87898-3732	-------	-------	37	-----	2	93.98	91.44	10.81	9.65	5.84
-------	-------	87898-3724	87898-3734	-------	-------	37	-----	4	93.98	91.44	10.81	9.65	5.84
-------	-------	87898-3725	87898-3735	-------	-------	37	-----	5	93.98	91.44	10.81	9.65	5.84
-------	-------	87898-3726	87898-3736	-------	-------	37	-----	6	93.98	91.44	10.81	9.65	5.84
-------	-------	87898-3821	87898-3831	-------	-------	38	-----	1	96.52	93.98	10.81	9.65	5.84
-------	-------	87898-3822	87898-3832	-------	-------	38	-----	2	96.52	93.98	10.81	9.65	5.84
-------	-------	87898-3824	87898-3834	-------	-------	38	-----	4	96.52	93.98	10.81	9.65	5.84
-------	-------	87898-3825	87898-3835	-------	-------	38	-----	5	96.52	93.98	10.81	9.65	5.84
-------	-------	87898-3826	87898-3836	-------	-------	38	-----	6	96.52	93.98	10.81	9.65	5.84
-------	-------	87898-3921	87898-3931	-------	-------	39	-----	1	99.06	96.52	10.81	9.65	5.84
-------	-------	87898-3922	87898-3932	-------	-------	39	-----	2	99.06	96.52	10.81	9.65	5.84
-------	-------	87898-3924	87898-3934	-------	-------	39	-----	4	99.06	96.52	10.81	9.65	5.84
-------	-------	87898-3925	87898-3935	-------	-------	39	-----	5	99.06	96.52	10.81	9.65	5.84
-------	-------	87898-3926	87898-3936	-------	-------	39	-----	6	99.06	96.52	10.81	9.65	5.84

EWR#1228, +0209
EC NO: S2010-0966
DRWN:ATSEE 2010/05/20
CH'KD:PTLIM 2005/03/29
APPR:MLONG 2010/06/08
DESCRIPTION
B3
REV

QUALITY SYMBOLS
F/A=0
F/C=0
F/P=0

GENERAL TOLERANCES (UNLESS SPECIFIED)

	mm	INCH
4 PLACES	± ---	± ---
3 PLACES	± ---	± ---
2 PLACES	± 0.2	± ---
1 PLACE	± ---	± ---

ANGULAR ± 3 °

DRAFT WHERE APPLICABLE MUST REMAIN WITHIN DIMENSIONS

DIMENSION STYLE: MM ONLY
SCALE: NTS
DESIGN UNITS: METRIC
THIRD ANGLE PROJECTION

DRAWN BY: YLQIAO DATE: 2005/03/14
CHECKED BY: PTLIM DATE: 2005/03/29
APPROVED BY: MLONG DATE: 2010/03/10
MATERIAL NO.: SEE TABLE

TITLE: CUSTOM HEADER 2.54MM PITCH SINGLE ROW SINGLE WAFER SMT HEADER

molex MOLEX INCORPORATED

DOCUMENT NO.: SD-87898-001
SHEET NO.: 14 OF 20
SIZE: A3

THIS DRAWING CONTAINS INFORMATION THAT IS PROPRIETARY TO MOLEX INCORPORATED AND SHOULD NOT BE USED WITHOUT WRITTEN PERMISSION

tb_frame_A3_P_AM_T
Rev. F 2009/06/18

PACKAGING OPTION PART NO.						CKT SIZE	VOID POSITION	PLATING TYPE	DIMENSION				
TRAY WITHOUT CAP	TRAY WITH CAP	TUBE WITHOUT CAP	TUBE WITH CAP	TAPE & REEL WITHOUT CAP	TAPE & REEL WITH CAP				A	B	G	F	M
-------	-------	87898-4021	87898-4031	-------	-------	40	-----	1	101.6	99.06	10.81	9.65	5.84
-------	-------	87898-4022	87898-4032	-------	-------	40	-----	2	101.6	99.06	10.81	9.65	5.84
-------	-------	87898-4024	87898-4034	-------	-------	40	-----	4	101.6	99.06	10.81	9.65	5.84
-------	-------	87898-4025	87898-4035	-------	-------	40	-----	5	101.6	99.06	10.81	9.65	5.84
-------	-------	87898-4026	87898-4036	-------	-------	40	-----	6	101.6	99.06	10.81	9.65	5.84

EWR#1228, +0209
EC NO: S2010-0966
DRWN:ATSEE 2010/05/20
CHKD:PTLIM 2005/03/29
APPR:MLONG 2010/06/08
DESCRIPTION
REV
B3

QUALITY SYMBOLS
FA=0
FC=0
FP=0

GENERAL TOLERANCES (UNLESS SPECIFIED)

	mm	INCH
4 PLACES	± ---	± ---
3 PLACES	± ---	± ---
2 PLACES	± 0.2	± ---
1 PLACE	± ---	± ---
ANGULAR ± 3 °		

DRAFT WHERE APPLICABLE MUST REMAIN WITHIN DIMENSIONS

DIMENSION STYLE: MM ONLY
SCALE: NTS
DESIGN UNITS: METRIC
THIRD ANGLE PROJECTION

DRAWN BY: YLQIAO DATE: 2005/03/14
CHECKED BY: PTLIM DATE: 2005/03/29
APPROVED BY: MLONG DATE: 2010/03/10
MATERIAL NO.: SEE TABLE

TITLE: CUSTOM HEADER 2.54MM PITCH SINGLE ROW SINGLE WAFER SMT HEADER

molex MOLEX INCORPORATED

DOCUMENT NO.: SD-87898-001
SHEET NO.: 15 OF 20
SIZE: A3

THIS DRAWING CONTAINS INFORMATION THAT IS PROPRIETARY TO MOLEX INCORPORATED AND SHOULD NOT BE USED WITHOUT WRITTEN PERMISSION

PART WITHOUT CAP
IN TUBE ORIENTATION

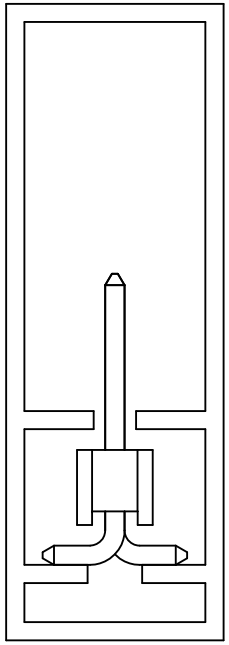

PART WITH CAP
IN TUBE ORIENTATION

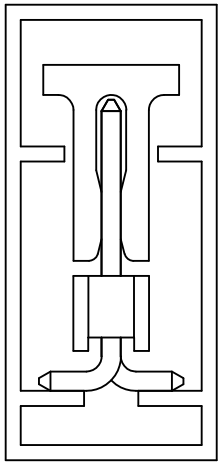

EWR#1228, +0209									
EC NO: S2010-0966									
DRWN:ATSEE	2010/05/20								
CHKD:PTLIM	2005/03/29								
APPR:MLONG	2010/06/08								
B3	REV	DESCRIPTION							

QUALITY SYMBOLS

F/A=0

F/C=0

F/P=0

GENERAL TOLERANCES (UNLESS SPECIFIED)

	mm	INCH
4 PLACES	± ---	± ---
3 PLACES	± ---	± ---
2 PLACES	± 0.2	± ---
1 PLACE	± ---	± ---
ANGULAR ± 3 °		

DRAFT WHERE APPLICABLE MUST REMAIN WITHIN DIMENSIONS

DIMENSION STYLE: MM ONLY	SCALE: NTS	DESIGN UNITS: METRIC	THIRD ANGLE PROJECTION
DRAWN BY: YLQIAO	DATE: 2005/03/14	TITLE: CUSTOM HEADER 2.54MM PITCH SINGLE ROW SINGLE WAFER SMT HEADER	
CHECKED BY: PTLIM	DATE: 2005/03/29		
APPROVED BY: MLONG	DATE: 2010/03/10	molex MOLEX INCORPORATED	
MATERIAL NO.: SEE TABLE		DOCUMENT NO.: SD-87898-001	SHEET NO.: 16 OF 20
SIZE: A3		THIS DRAWING CONTAINS INFORMATION THAT IS PROPRIETARY TO MOLEX INCORPORATED AND SHOULD NOT BE USED WITHOUT WRITTEN PERMISSION	

tb_frame_A3_P_AM_T
Rev. F 2009/06/18

EMBOSSED CARRIER TYPE 'A'

CKT	DIMENSION				
	Bo	Ao	Ko	F	W
2	8.02	5.20	13.60	11.50	24.00
4	10.55	5.20	11.30	11.50	24.00

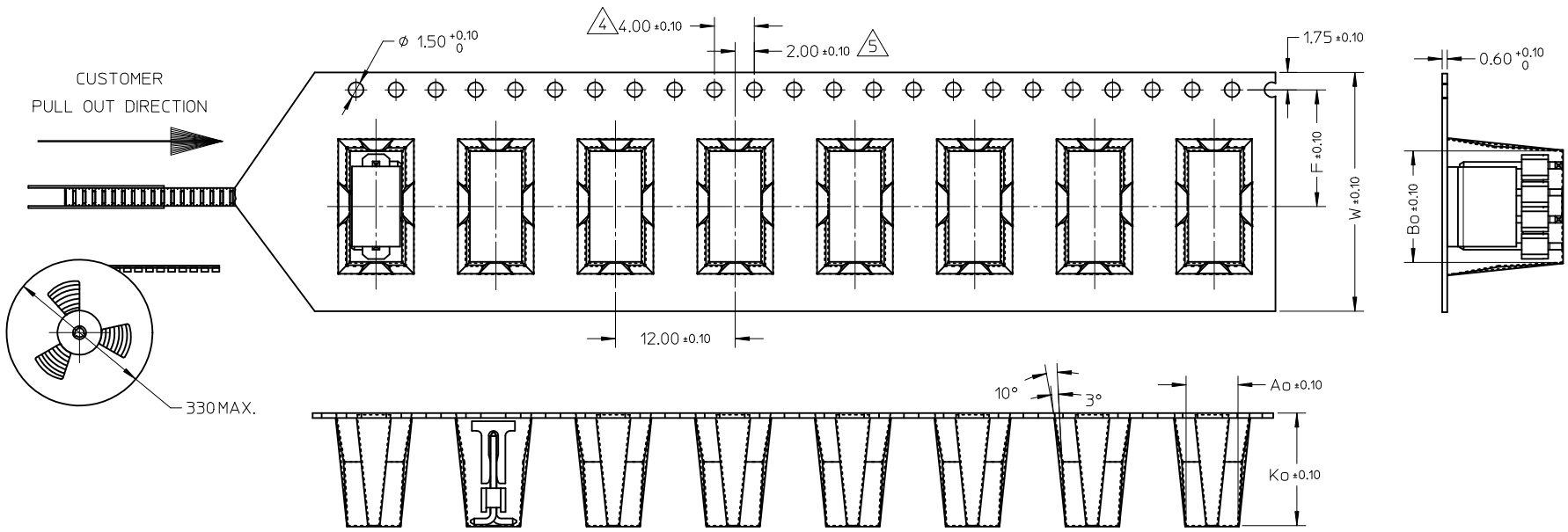

PART PACK IN E/TAPE ORIENTATION (FOR REF USE)

NOTES:

1. LEADER AND TRAILER TAPE

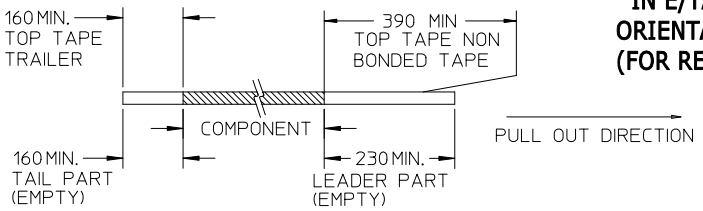

2. PEELING OFF FORCE OF THE TOP TAPE: 20 - 80gf.
   (PEELING DIRECTION AS SHOWN IN FOLLOWING FIGURE)

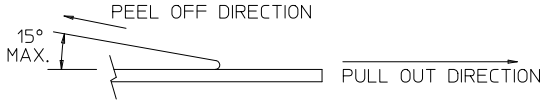

3. MATERIAL: BLACK P.S CONDUCTIVE, BLACK
4. MEASURED FROM CENTRELINE OF SPROCKET HOLE TO CENTRELINE OF SPOCKET
5. CUMULATIVE TOLERANCE OF 10 SPROCKET HOLE IS ±0.20mm
6. A0 AND B0 ARE MEASURE FROM ABOVE POCKET BASE 0.30mm
7. TAPE AND REEL SPECIFICATION IS AS PER EIA-481.
8. TAPE AND REEL QUANTITY : 440PCS/REEL
9. THE TAPE IS TREATED FOR ANTI-STATIC.
10. ALL RADIUS ARE 0.30MM UNLESS SPECIFY
11. SURFACE RESISTIVITY 10^3 TO 10 OHMS.

EWR#1228, +0209
EC NO: S2010-0966
DRWN:ATSEE 2010/05/20
CH'KD:PTLIM 2005/03/29
APPR:MLONG 2010/06/08
DESCRIPTION
B3
REV

QUALITY SYMBOLS
F_A=0
F_C=0
F_P=0

GENERAL TOLERANCES (UNLESS SPECIFIED)	mm	INCH
4 PLACES	± ---	± ---
3 PLACES	± ---	± ---
2 PLACES	± 0.2	± ---
1 PLACE	± ---	± ---
ANGULAR ± 3 °		

DRAFT WHERE APPLICABLE MUST REMAIN WITHIN DIMENSIONS

DIMENSION STYLE: MM ONLY
SCALE: NTS
DESIGN UNITS: METRIC
THIRD ANGLE PROJECTION

DRAWN BY	YLQIAO	DATE 2005/03/14
CHECKED BY	PTLIM	DATE 2005/03/29
APPROVED BY	MLONG	DATE 2010/03/10

TITLE: CUSTOM HEADER 2.54MM PITCH SINGLE ROW SINGLE WAFER SMT HEADER

molex MOLEX INCORPORATED

MATERIAL NO.: SEE TABLE
DOCUMENT NO.: SD-87898-001
SHEET NO.: 17 OF 20
SIZE: A3

THIS DRAWING CONTAINS INFORMATION THAT IS PROPRIETARY TO MOLEX INCORPORATED AND SHOULD NOT BE USED WITHOUT WRITTEN PERMISSION

CKT	DIMENSION				
	Bo	Ao	Ko	F	W
5	13.10	5.20	11.30	11.50	24.00

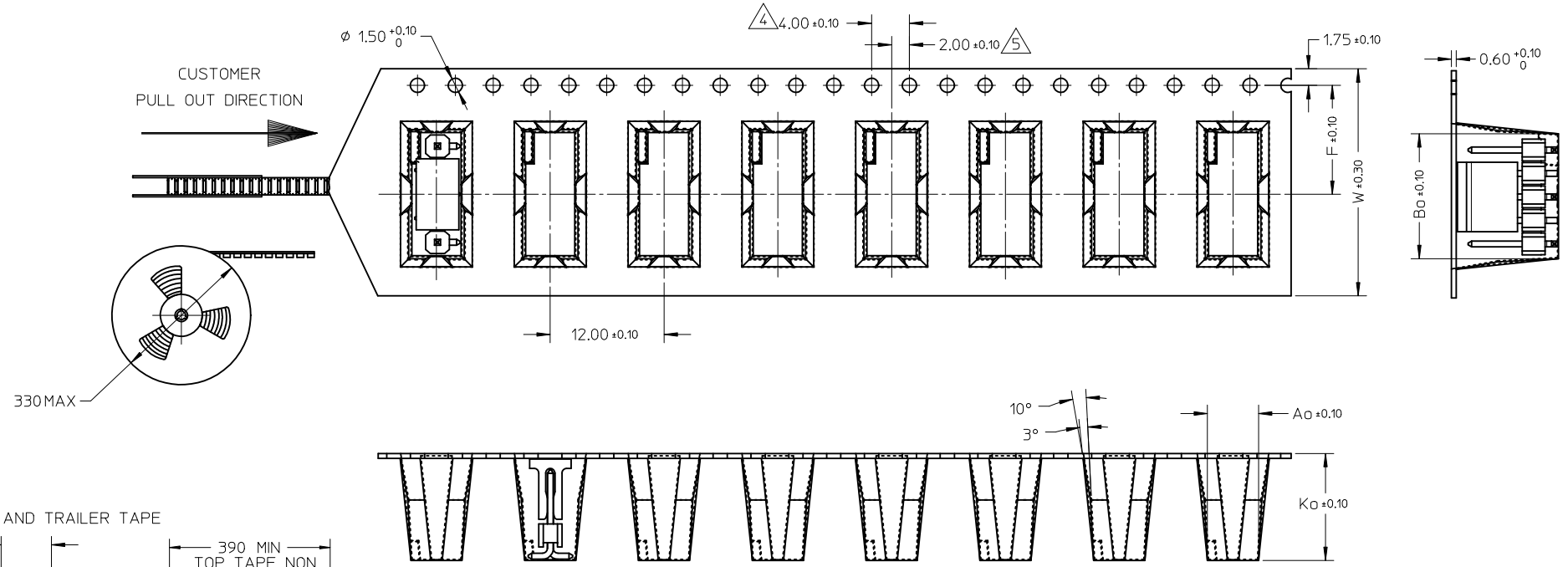

PART PACK IN E/TAPE ORIENTATION (FOR REF USE)

NOTES:

1. LEADER AND TRAILER TAPE

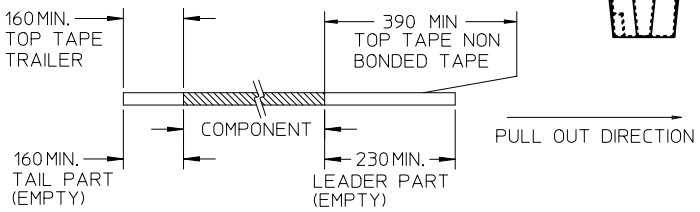

2. PEELING OFF FORCE OF THE TOP TAPE: 20 - 80gf.
   (PEELING DIRECTION AS SHOWN IN FOLLOWING FIGURE)

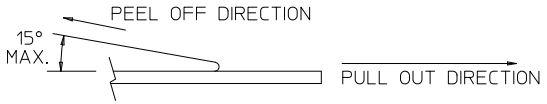

3. MATERIAL: BLACK P.S CONDUCTIVE, BLACK
4. MEASURED FROM CENTRELINE OF SPROCKET HOLE TO CENTRELINE OF SPOCKET
5. CUMULATIVE TOLERANCE OF 10 SPROCKET HOLE IS ±0.20mm
6. A0 AND B0 ARE MEASURE FROM ABOVE POCKET BASE 0.30mm
7. TAPE AND REEL SPECIFICATION IS AS PER EIA-481.
8. TAPE AND REEL QUANTITY : 440PCS/REEL
9. THE TAPE IS TREATED FOR ANTI-STATIC.
10. ALL RADIUS ARE 0.30MM UNLESS SPECIFY
11. SURFACE RESISTIVITY 10^3 TO 10 OHMS.

EWR#1228, +0209
EC NO: S2010-0966
DRWN:ATSEE 2010/05/20
CH'KD:PTLIM 2005/03/29
APPR:MLONG 2010/06/08
DESCRIPTION
REV B3

QUALITY SYMBOLS
F_A=0
F_C=0
F_P=0

GENERAL TOLERANCES (UNLESS SPECIFIED)	mm	INCH
4 PLACES	± ---	± ---
3 PLACES	± ---	± ---
2 PLACES	± 0.2	± ---
1 PLACE	± ---	± ---
ANGULAR ± 3 °		

DRAFT WHERE APPLICABLE MUST REMAIN WITHIN DIMENSIONS

DIMENSION STYLE: MM ONLY	SCALE: NTS	DESIGN UNITS: METRIC	THIRD ANGLE PROJECTION
DRAWN BY: YLQIAO	DATE: 2005/03/14	TITLE: CUSTOM HEADER 2.54MM PITCH SINGLE ROW SINGLE WAFER SMT HEADER	
CHECKED BY: PTLIM	DATE: 2005/03/29		
APPROVED BY: MLONG	DATE: 2010/03/10	molex MOLEX INCORPORATED	
MATERIAL NO.: SEE TABLE		DOCUMENT NO.: SD-87898-001	SHEET NO.: 18 OF 20
SIZE: A3	THIS DRAWING CONTAINS INFORMATION THAT IS PROPRIETARY TO MOLEX INCORPORATED AND SHOULD NOT BE USED WITHOUT WRITTEN PERMISSION		

tb_frame_A3_P_AM_T
Rev. F 2009/06/18

CKT	DIMENSION					
	Bo	So	Ao	Ko	F	W
6	15.65	28.40	5.20	11.30	14.20	32.00
8	20.70	40.40	5.20	11.30	20.20	44.00
10	25.80	40.40	5.20	11.30	20.20	44.00
12	30.90	52.40	5.20	11.30	26.20	56.00
14	35.95	52.40	5.20	11.30	26.20	56.00
16	41.05	52.40	5.20	11.30	26.20	56.00
18	46.20	68.40	5.20	11.30	34.20	72.00
20	51.20	68.40	5.20	11.30	34.20	72.00

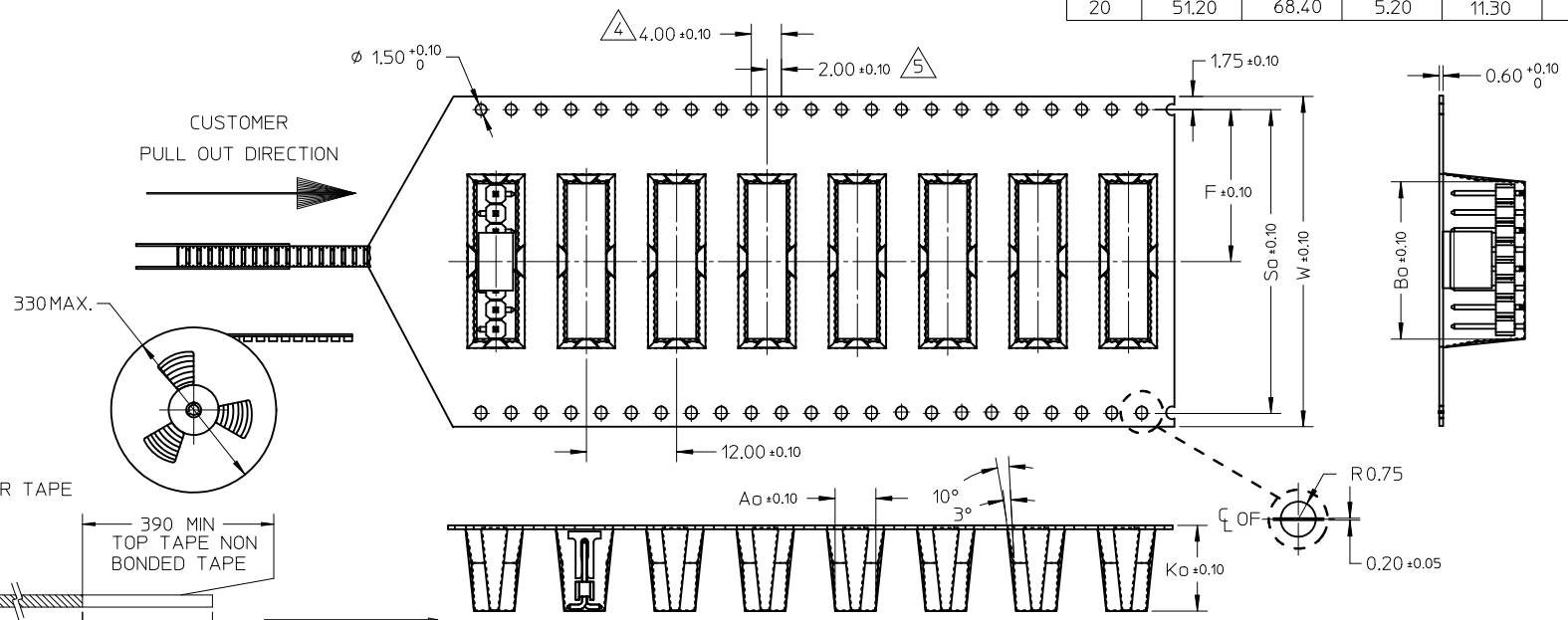

PART PACK IN E/TAPE ORIENTATION (FOR REF USE)

NOTES:

1. LEADER AND TRAILER TAPE

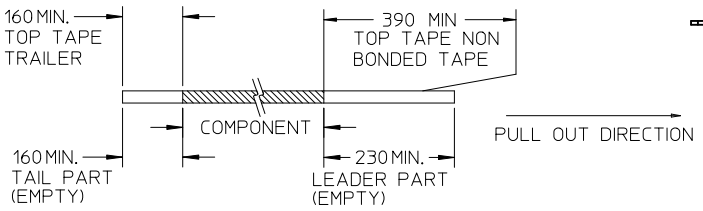

2. PEELING OFF FORCE OF THE TOP TAPE: 20 - 80gf.
   (PEELING DIRECTION AS SHOWN IN FOLLOWING FIGURE)

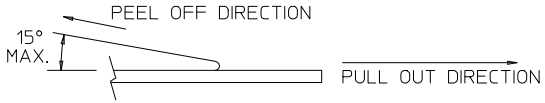

3. MATERIAL: BLACK P.S CONDUCTIVE, BLACK
4. MEASURED FROM CENTRELINE OF SPROCKET HOLE TO CENTRELINE OF SPOCKET
5. CUMULATIVE TOLERANCE OF 10 SPROCKET HOLE IS ±0.20mm
6. A0 AND B0 ARE MEASURE FROM ABOVE POCKET BASE 0.30mm
7. TAPE AND REEL SPECIFICATION IS AS PER EIA-481.
8. TAPE AND REEL QUANTITY : 440PCS/REEL
9. THE TAPE IS TREATED FOR ANTI-STATIC.
10. ALL RADIUS ARE 0.30MM UNLESS SPECIFY
11. SURFACE RESISTIVITY 10^3 TO 10 OHMS.

EWR#1228, +0209
EC NO: S2010-0966
DRWN:ATSEE 2010/05/20
CH'KD:PTLIM 2005/03/29
APPR:MLONG 2010/06/08
DESCRIPTION
B3
REV

QUALITY SYMBOLS
F_A=0
F_C=0
F_P=0

GENERAL TOLERANCES (UNLESS SPECIFIED)	mm	INCH
4 PLACES	± ---	± ---
3 PLACES	± ---	± ---
2 PLACES	± 0.2	± ---
1 PLACE	± ---	± ---
ANGULAR ± 3 °		

DRAFT WHERE APPLICABLE MUST REMAIN WITHIN DIMENSIONS

DIMENSION STYLE: MM ONLY
SCALE: NTS
DESIGN UNITS: METRIC
THIRD ANGLE PROJECTION

DRAWN BY: YLQIAO DATE: 2005/03/14
CHECKED BY: PTLIM DATE: 2005/03/29
APPROVED BY: MLONG DATE: 2010/03/10
MATERIAL NO.: SEE TABLE

TITLE: CUSTOM HEADER 2.54MM PITCH SINGLE ROW SINGLE WAFER SMT HEADER

molex MOLEX INCORPORATED

DOCUMENT NO.: SD-87898-001
SHEET NO.: 19 OF 20
SIZE: A3

THIS DRAWING CONTAINS INFORMATION THAT IS PROPRIETARY TO MOLEX INCORPORATED AND SHOULD NOT BE USED WITHOUT WRITTEN PERMISSION

CKT	DIMENSION					
	Bo	So	Ao	Ko	F	W
7	18.20	40.40	5.20	11.30	20.20	44.00
9	23.25	40.40	5.20	11.30	20.20	44.00
11	28.35	40.40	5.20	11.30	20.20	44.00
13	33.40	52.40	5.20	11.30	26.20	56.00
15	38.50	52.40	5.20	11.30	26.20	56.00
17	43.60	68.40	5.20	11.30	34.20	72.00
19	48.70	68.40	5.20	11.30	34.20	72.00
21	53.80	68.40	5.20	11.30	34.20	72.00

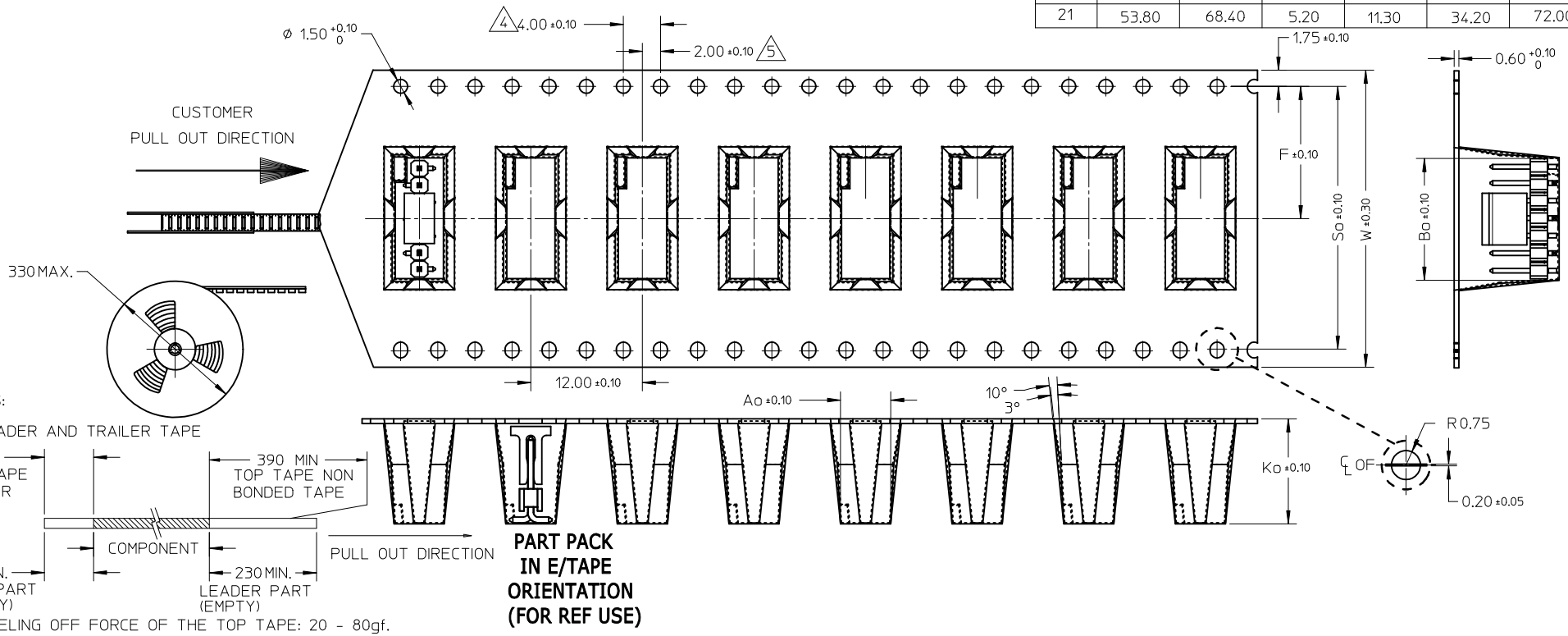

NOTES:

1. LEADER AND TRAILER TAPE

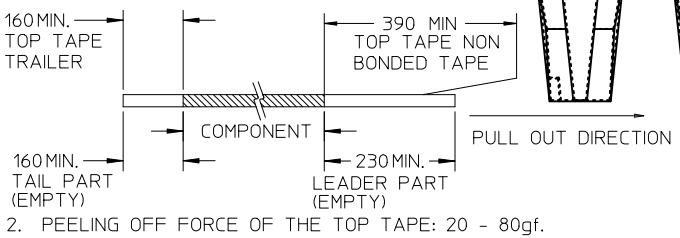

2. PEELING OFF FORCE OF THE TOP TAPE: 20 - 80gf.
(PEELING DIRECTION AS SHOWN IN FOLLOWING FIGURE)

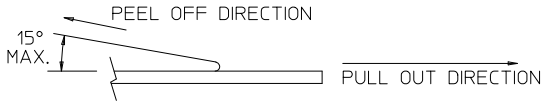

3. MATERIAL: BLACK P.S CONDUCTIVE, BLACK
4. MEASURED FROM CENTRELINE OF SPROCKET HOLE TO CENTRELINE OF SPOCKET
5. CUMULATIVE TOLERANCE OF 10 SPROCKET HOLE IS ±0.20mm
6. A0 AND B0 ARE MEASURE FROM ABOVE POCKET BASE 0.30mm
7. TAPE AND REEL SPECIFICATION IS AS PER EIA-481.
8. TAPE AND REEL QUANTITY : 440PCS/REEL
9. THE TAPE IS TREATED FOR ANTI-STATIC.
10. ALL RADIUS ARE 0.30MM UNLESS SPECIFY
11. SURFACE RESISTIVITY 10^3 TO 10 OHMS.

EWR#1228, +0209
EC NO: S2010-0966
DRWN:ATSEE 2010/05/20
CH'KD:PTLIM 2005/03/29
APPR:MLONG 2010/06/08
DESCRIPTION
B3
REV

QUALITY SYMBOLS
F_A=0
F_C=0
F_P=0

GENERAL TOLERANCES (UNLESS SPECIFIED)	mm	INCH
4 PLACES	± ---	± ---
3 PLACES	± ---	± ---
2 PLACES	± 0.2	± ---
1 PLACE	± ---	± ---
ANGULAR ± 3 °		

DRAFT WHERE APPLICABLE MUST REMAIN WITHIN DIMENSIONS

DIMENSION STYLE: MM ONLY
SCALE: NTS
DESIGN UNITS: METRIC
THIRD ANGLE PROJECTION

DRAWN BY	YLQIAO	DATE 2005/03/14
CHECKED BY	PTLIM	DATE 2005/03/29
APPROVED BY	MLONG	DATE 2010/03/10

TITLE: CUSTOM HEADER 2.54MM PITCH SINGLE ROW SINGLE WAFER SMT HEADER

molex MOLEX INCORPORATED

MATERIAL NO.: SEE TABLE
DOCUMENT NO.: SD-87898-001
SHEET NO.: 20 OF 20
SIZE: A3

THIS DRAWING CONTAINS INFORMATION THAT IS PROPRIETARY TO MOLEX INCORPORATED AND SHOULD NOT BE USED WITHOUT WRITTEN PERMISSION