AC/DC Convertor IC

PWM Type DC/DC Converter IC Built-in Switching MOSFET for Non-Isolated Type

BM2P134Q BM2P137QK

General Description

The PWM type DC/DC converter for AC/DC provides an optimum system for all products that include an electrical outlet. It enables simpler design of a high effective converter specializing in non-isolated devices. This series has a built-in starter circuit that tolerates 650 V / 800 V, and it contributes to low power consumption. With a current detection resistor for switching as internal device, it can be designed as small power supply. Since current mode control is utilized, current is restricted in each cycle and excellent performance is demonstrated in bandwidth and transient response. The oscillation frequency is fixed to 100 kHz A frequency hopping function is also on chip, and it contributes to low EMI. In addition, a built-in super junction MOSFET which tolerates 650 V / 800 V makes the design easy.

Features

- PWM Current Mode Method
- Frequency Hopping Function
- Burst Operation at Light Load
- Built-in 650 V / 800 V Starter Circuit that Tolerates
- Built-in 650 V / 800 V Super Junction MOSFET
- VCC Pin Under Voltage Protection
- VCC Pin Over Voltage Protection
- Over Current Limiter Function per Cycle
- Soft Start Function

Key Specifications

- Power Supply Voltage Operation Range
  VCC: 10.60 V to 14.05 V
  DRAIN: 650 V / 800 V(Max)
- Pulse Operation Current 1.20 mA(Typ)
- Burst Operation Current 0.45 mA(Typ)
- Oscillation Frequency 100 kHz(Typ)
- Operation Temperature Range -40 °C to +105 °C
- MOSFET ON Resistor
  BM2P134Q: 4.0 Ω(Typ)
  BM2P137QK: 7.5 Ω(Typ)

Package	W(Typ) x D(Typ) x H(Max)
DIP7K	9.27 mm x 6.35 mm x 8.63 mm pitch 2.54 mm

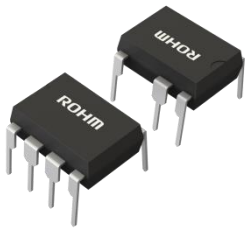

Applications

LED Lights, Air Conditioners, Cleaners etc.

Typical Application Circuit

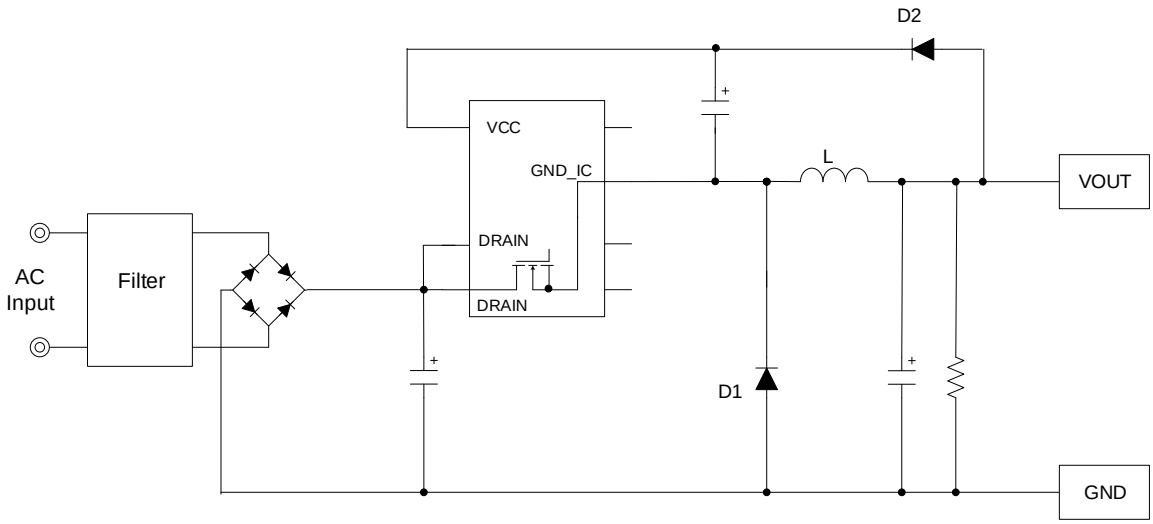

○Product structure : Silicon integrated circuit ○This product has no designed protection against radioactive rays

© 2018 ROHM Co., Ltd. All rights reserved.

Pin Configuration

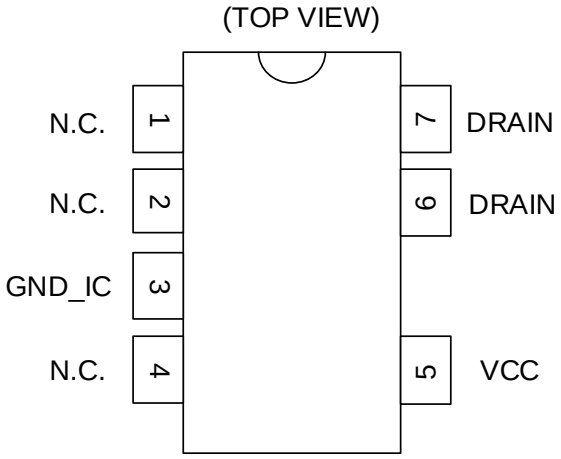

Pin Descriptions

Pin No.	Pin Name	I/O	Function	ESD Diode	
				VCC	GND_IC
1	N.C.	-	Non Connection	-	-
2	N.C.	-	Non Connection	-	-
3	GND_IC	I/O	GND pin	✓	-
4	N.C.	-	Non Connection	-	-
5	VCC	I	Power supply input pin	-	✓
6	DRAIN	I/O	MOSFET DRAIN pin	-	✓
7	DRAIN	I/O	MOSFET DRAIN pin	-	✓

Block Diagram

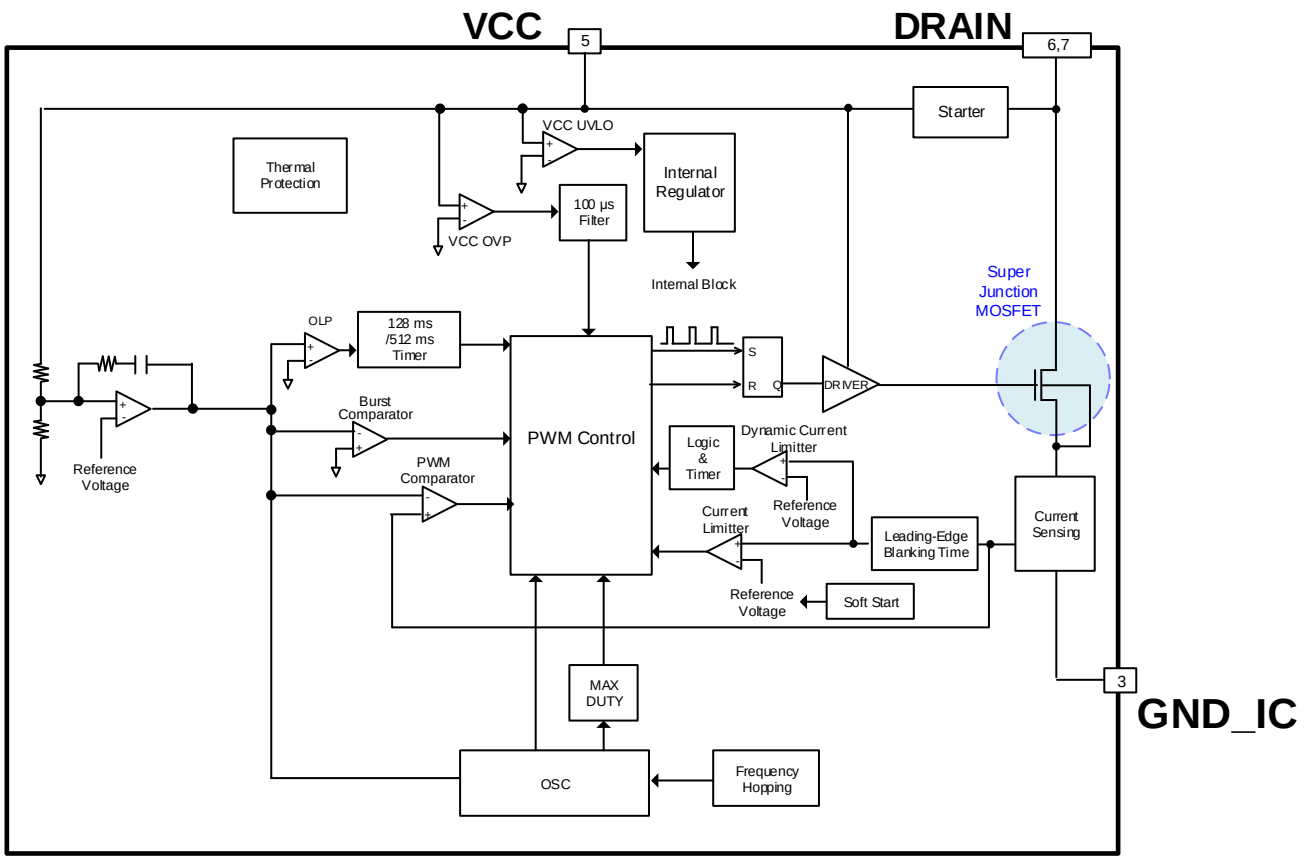

© 2018 ROHM Co., Ltd. All rights reserved.

Description of Blocks

1 Back Converter

This is the IC for exclusive use of non-isolated type back converter.

<Basic operation of back converter>

1.1 When the MOSFET for Switching is ON

When the MOSFET turns ON, current I_L flows to coil L and energy is stored. At this moment, the voltage of the GND_IC pin becomes the voltage near the DRAIN pin, and the diode D1 is OFF.

$$I_L = \frac{(V_{IN} - V_{OUT})}{L} \times ton$$

Where:

V_{IN} is the DRAIN Voltage
V_{OUT} is the Output Voltage
I_L is the Inductor Current
ton is ON-Time of MOSFET

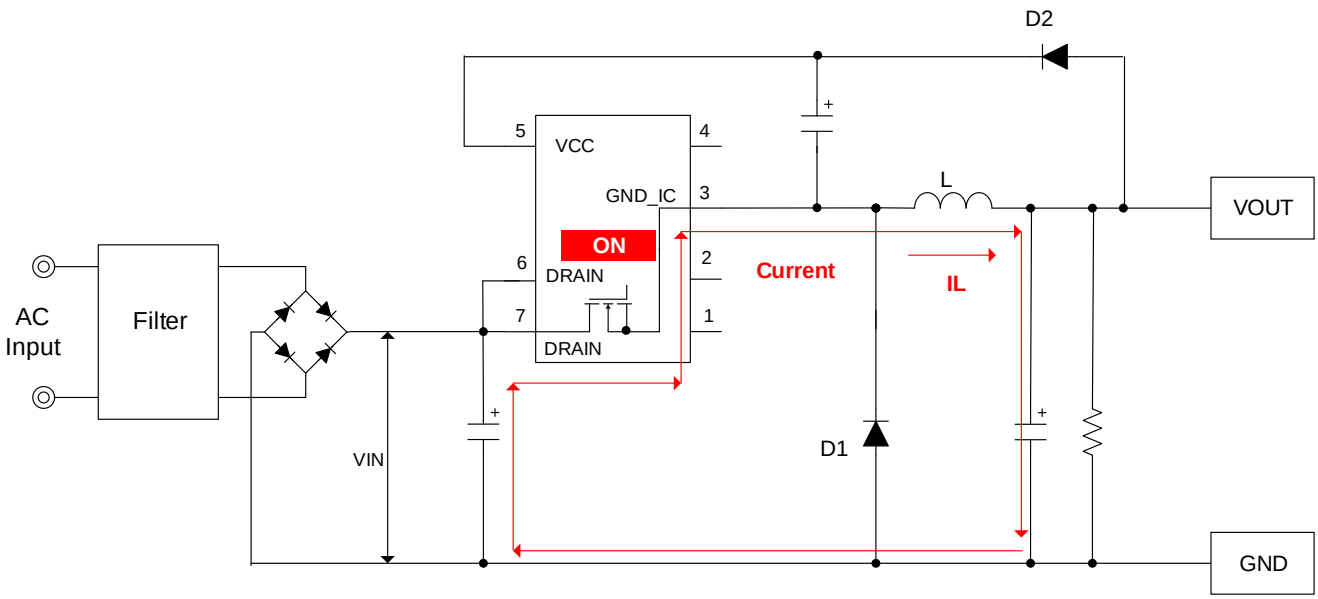

Figure 1. Back Converter Operation (MOSFET=ON)

© 2018 ROHM Co., Ltd. All rights reserved.

1 Back Converter – continued

1.2 When the MOSFET for Switching is OFF

When the MOSFET turns OFF, the energy stored in coil is output via diode. At the moment, the MOSFET is OFF.

$$I_L = \frac{V_{OUT}}{L} \times toff$$

Where:
V_{OUT} is the Output Voltage
I_L is the Inductor Current
$toff$ is OFF-Time of MOSFET

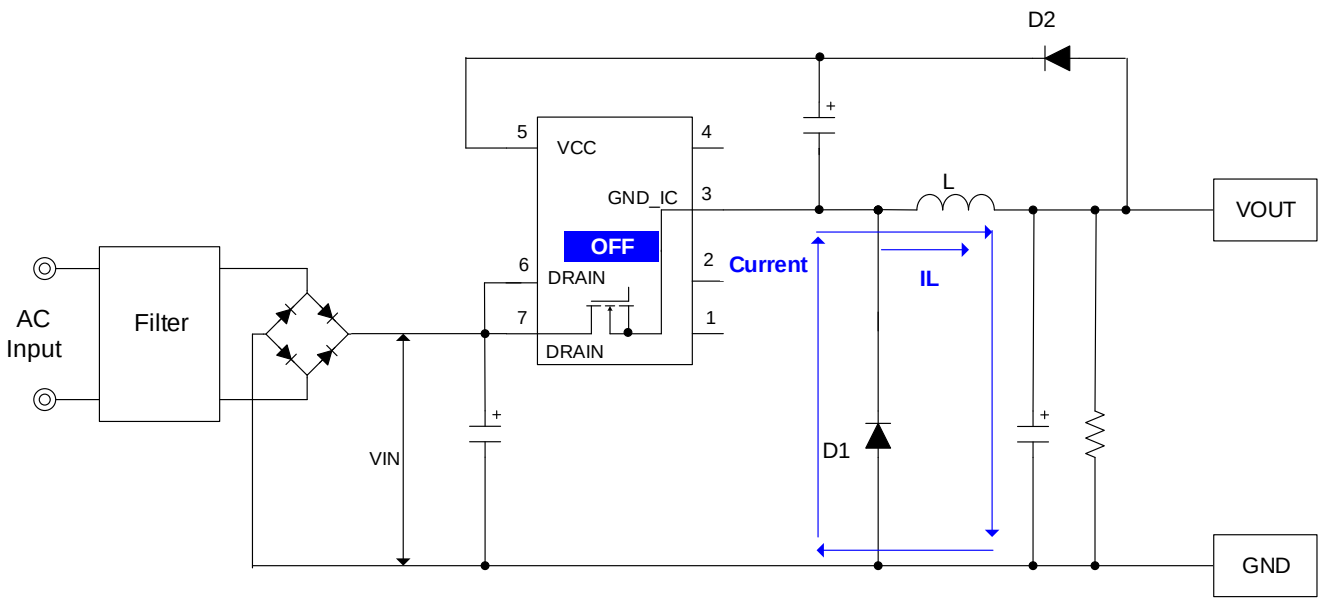

Figure 2. Back Converter Operation (MOSFET=OFF)

© 2018 ROHM Co., Ltd. All rights reserved.

Description of Blocks - continued

2 Start Sequences

Start sequences are shown in Figure 3. See the sections below for detailed descriptions.

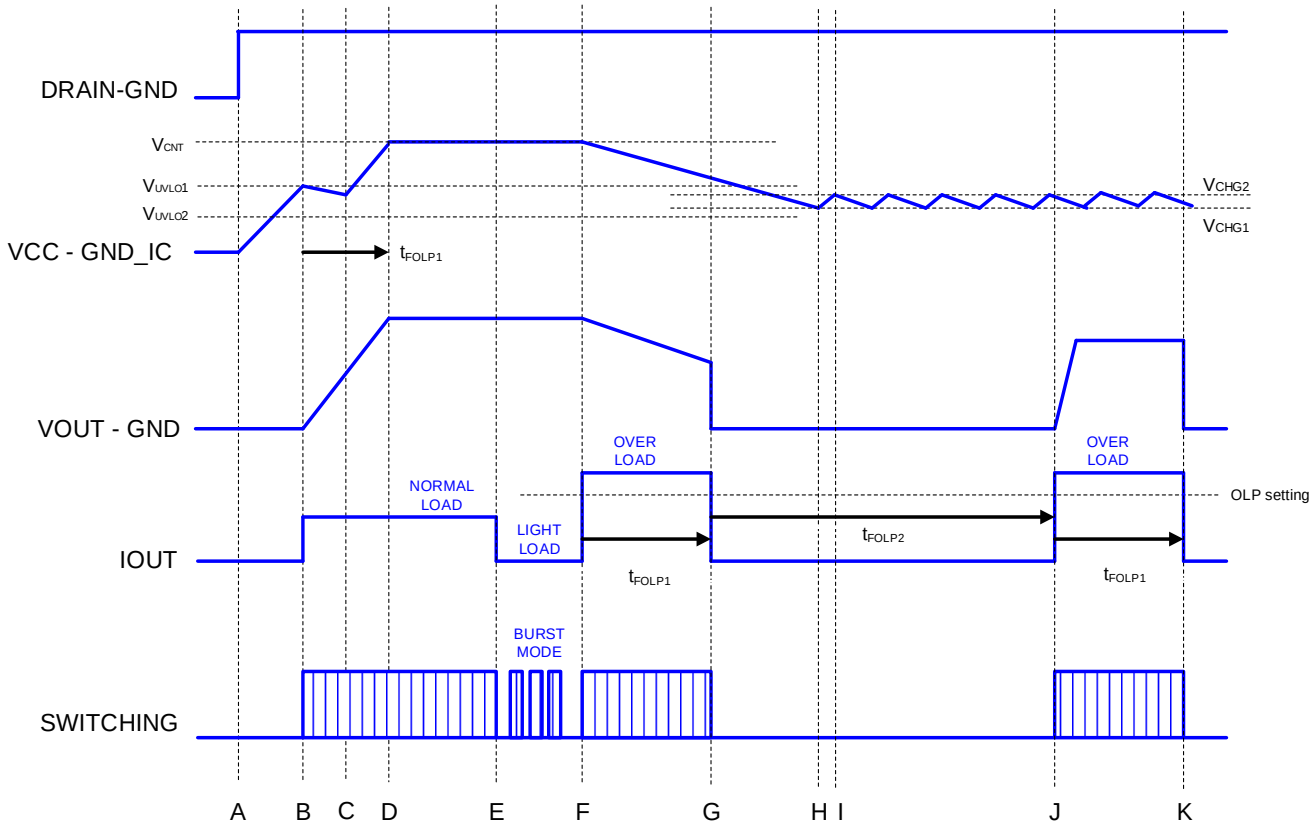

Figure 3. Start Sequences Timing Chart

A: The input voltage is applied to the DRAIN pin and the VCC pin voltage rises.
B: If the VCC pin voltage exceeds V_{UVLO1}, the IC starts to operate. And if the IC judges the other protection functions as normal condition, it starts switching operation.
The soft start function limits the over current limiter value to prevent any excessive voltage or current rising.
When the switching operation starts, the VOUT rises.
C: Until the VOUT becomes constant value from starting-up, the VCC pin voltage drops by the VCC pin consumption current.
D: After switching starts, it is necessary that the output voltage is set to rating voltage within t_{FOLP1} (128 ms Typ).
E: At light load, the IC starts burst operation to restrict the consumption power.
F: When the load exceeds a certain electric power, the IC starts over load operation.
G: If the setting over load status lasts for t_{FOLP1} (128 ms Typ), switching is turned OFF.
H: When the VCC pin voltage becomes less than V_{CHG1}, recharge operation is started.
I: When the VCC pin voltage becomes more than V_{CHG2}, recharge operation is stopped.
J: After t_{FOLP2} (512 ms Typ), the over load protection circuit starts switching.
K: Same as G.

© 2018 ROHM Co., Ltd. All rights reserved.

Description of Blocks – continued

3 Stop Sequences

Stop sequences are shown in Figure 4.

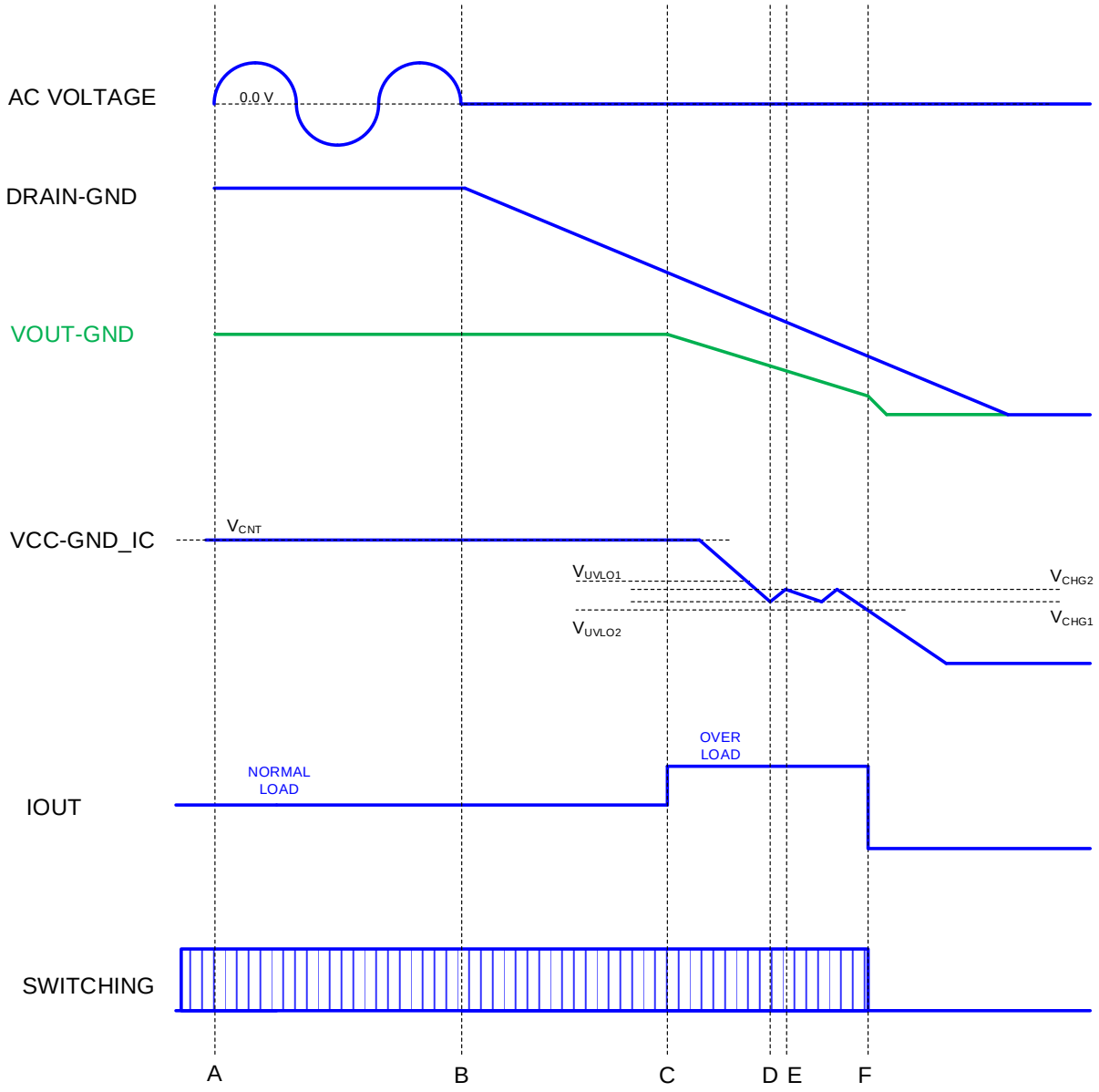

Figure 4. Stop Sequences Timing Chart

A: Normal operation
B: The input AC voltage is stopped. The DRAIN voltage starts to drop.
C: If the DRAIN voltage drops below a certain voltage, it becomes maximum duty and over load protection operates.
D: If the output voltage drops, the VCC pin voltage drops too. And recharge operation is started.
E: The recharge operation is stopped.
F: If the DRAIN voltage drops below a certain voltage, the VCC pin voltage lowers UVLO or less in order to stop recharge operation.

© 2018 ROHM Co., Ltd. All rights reserved.

Description of Blocks – continued

4 Start Circuit

This IC enables low standby electric power and high-speed startup because it has a built-in start circuit. The consumption current after startup is only idling current I_{START3} (Typ=10 µA). The startup current flows from the DRAIN pin.

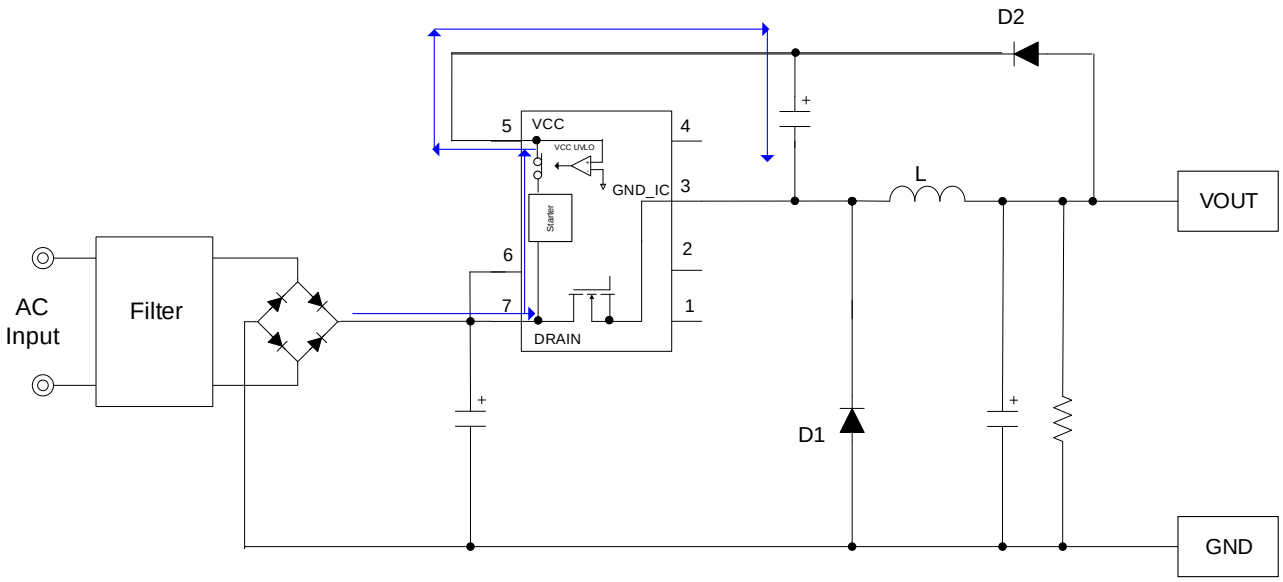

Figure 5. Start Circuit

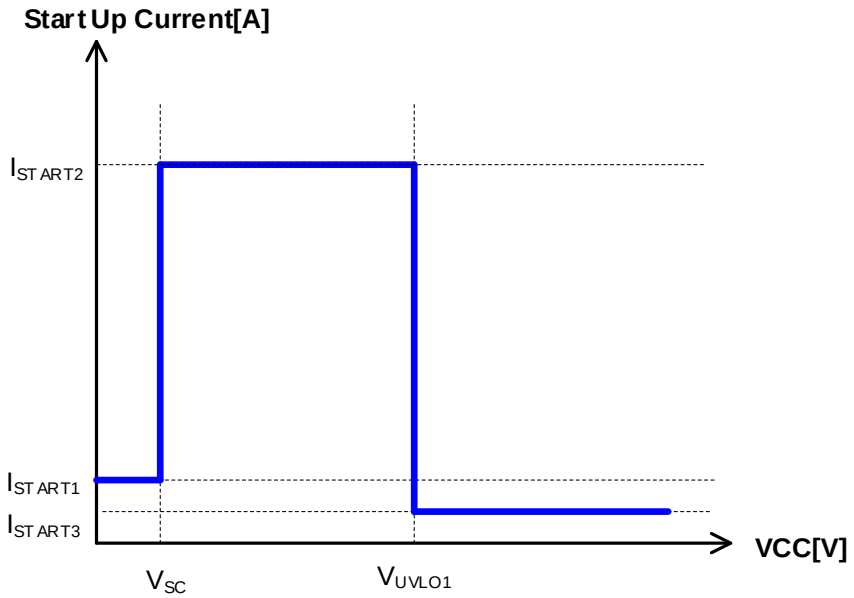

Figure 6. Startup Current vs VCC Voltage

© 2018 ROHM Co., Ltd. All rights reserved.

Description of Blocks – continued

5 The VCC Pin Protection Function

This IC has the internal protection function at the VCC pin shown in below.

1) Under voltage protection function UVLO
2) Over voltage protection function VCC OVP
3) VCC recharge function

5.1 VCC UVLO / VCC OVP Function

VCC UVLO function and VCC OVP function are auto recovery type comparators that have voltage hysteresis. VCC OVP has an internal mask time. If the condition that the VCC pin voltage is higher than V_{OVP1} lasts for t_{COMP} (100 µs Typ), it performs detection. The recovery requirements are that the VCC pin voltage is lower than V_{OVP2}.

5.2 VCC Recharge Function

If the VCC pin drops to V_{CHG1} after once the VCC pin becomes more than V_{UVLO1} and the IC starts to operate, the VCC charge function operates. At that time, the VCC pin is charged from the DRAIN pin through start circuit. When the VCC pin voltage is more than V_{CHG2}, charge is stopped.

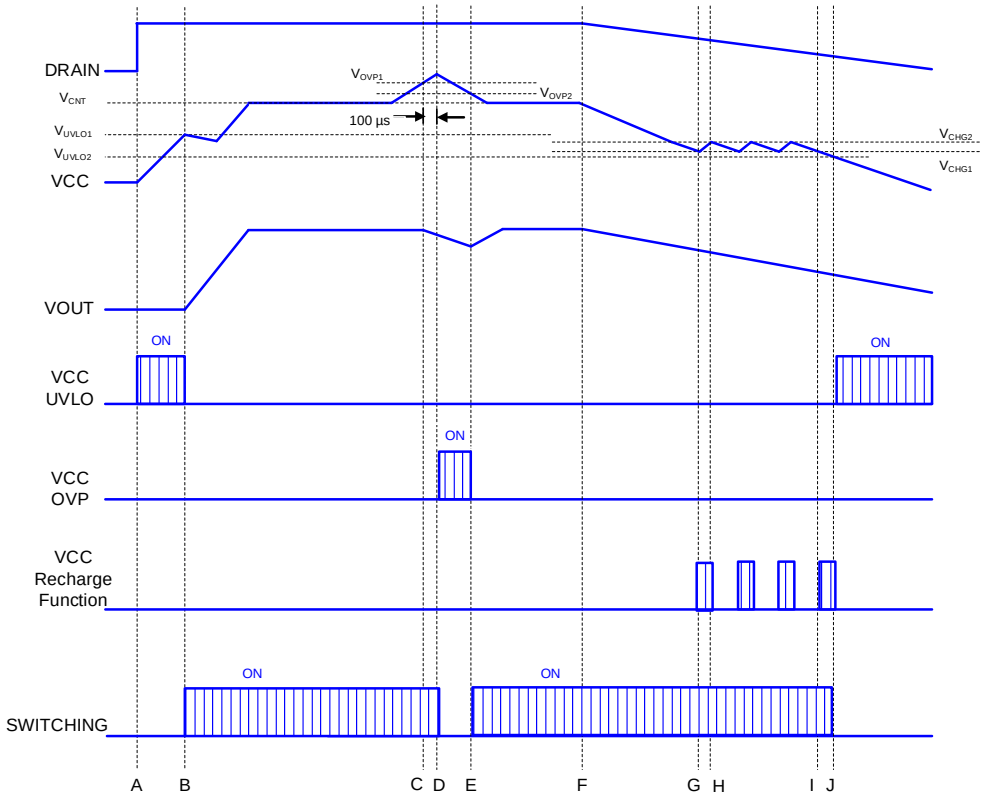

Figure 7. VCC UVLO / VCC OVP / VCC Recharge Function Timing Chart

A: The input voltage is applied to the DRAIN pin and the VCC pin voltage rises.
B: When the VCC pin voltage becomes higher than V_{UVLO1}, the IC starts operating. And if the IC judges the other protection functions as normal condition, it starts switching operation. The soft start function limits the over current limiter value to prevent any excessive voltage or current rising. When the switching operation starts, the VOUT rises.
C: When the VCC pin voltage becomes higher than V_{OVP1}, VCC OVP timer operates.
D: When the condition that the VCC pin voltage is higher than V_{OVP1} lasts for t_{COMP} (100 µs Typ), the IC detects VCC OVP and stops switching.
E: When the VCC pin voltage becomes lower than V_{OVP2}, VCC OVP is released.
F: When the input power supply is turned OFF, the DRAIN pin voltage drops.
G: When the VCC pin voltage becomes less than V_{CHG1}, recharge function is started.
H: When the VCC pin voltage becomes higher than V_{CHG2}, recharge function is stopped.
I: When the VCC pin voltage becomes lower than V_{CHG1}, recharge function is started. However, the supply to the VCC pin decrease and the VCC pin voltage drops because of low DRAIN voltage.
J: When the VCC pin voltage becomes lower than V_{UVLO2}, VCC UVLO function starts operating.

© 2018 ROHM Co., Ltd. All rights reserved.

Description of Blocks – continued

6 DC/DC Driver

This performs current mode PWM control. An internal oscillator sets a fixed oscillation frequency f_{SW} (100 kHz Typ). This IC has a built-in oscillation frequency hopping function. The maximum duty is D_{MAX} (75 % Typ). To achieve the low consumption power at light load, it also has an internal burst mode circuit.

6.1 Setting of the Output Voltage

Adopting the non-isolated type without photo coupler, the VCC voltage should be set to rating value. VCC Voltage means the voltage between the VCC pin and the GND_IC pin. The output voltage VOUT is defined by the formula below. The voltage when the MOSFET is OFF is shown in Figure 8.

$$V_{OUT} = V_{CNT} + V_{FD2} - V_{FD1}$$

Where:
V_{FD1} is the forward voltage of diode D1.
V_{FD2} is the forward voltage of diode D2.
V_{CNT} is the VCC Control Voltage

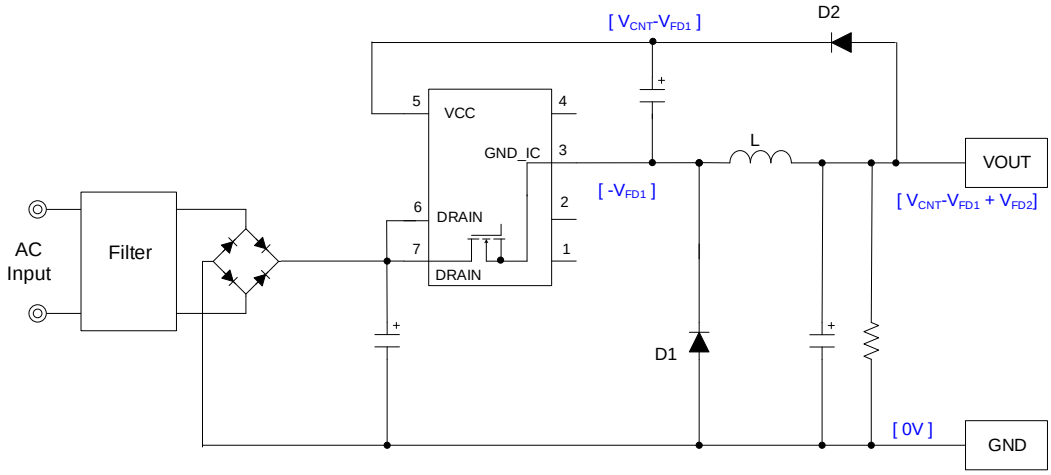

Figure 8. Back Converter Circuit (At MOSFET Turned OFF)

At light load, the output voltage may rise because the VCC voltage is difference from the output voltage. In this case, it is necessary that the output pin is connected to resistor and the voltage should be lowered. The circuit diagram is shown in Figure 9.

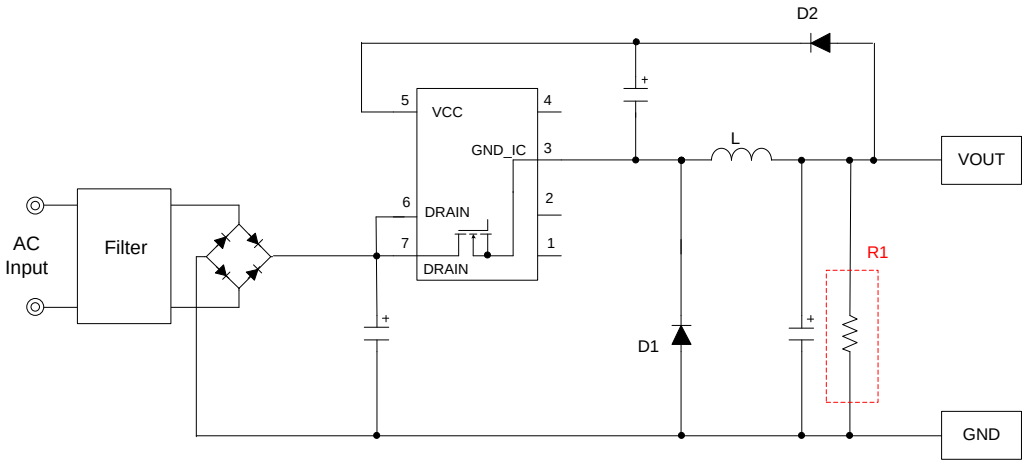

Figure 9. Circuit to Take Measure against Voltage Rising at Light Load

© 2018 ROHM Co., Ltd. All rights reserved.

6.1 Setting of the Output Voltage – continued

This IC has a few external parts by fixing the VCC voltage and it enables simpler design. If you adjust the output voltage, it can become the variable voltage by adding zener diodes. However, it is necessary to consider the dispersion of the diodes.
The output voltage VOUT is defined by the formula below. The voltage when the MOSFET is OFF is shown in Figure 10.

$$V_{OUT} = V_{CNT} + V_{FD2} - V_{FD1} + V_{ZD1}$$

Where:
V_{FD1} is the forward voltage of diode D1.
V_{FD2} is the forward voltage of diode D2.
V_{ZD1} is the zener diode ZD1 voltage.
V_{CNT} is the VCC Control Voltage

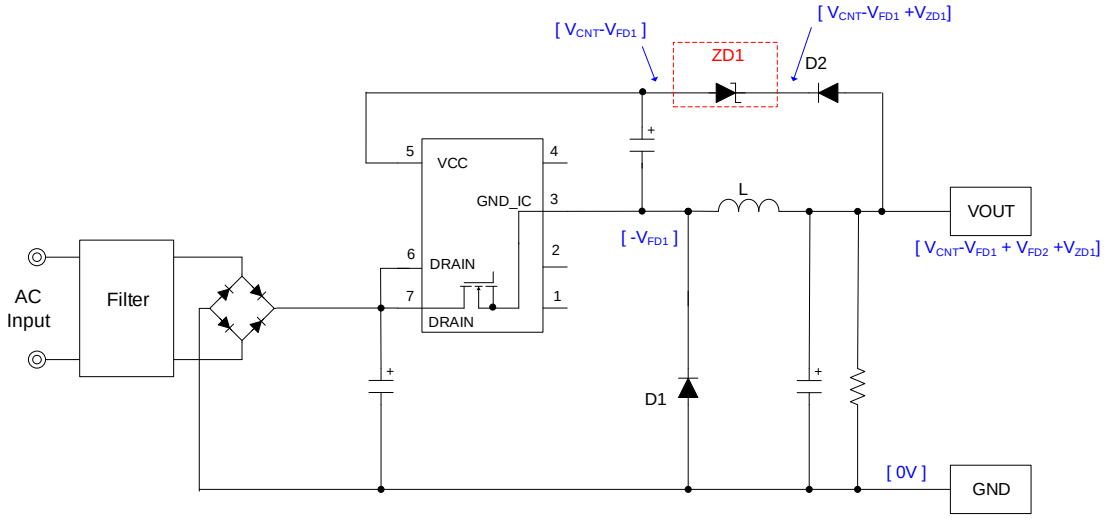

Figure 10. Back Converter Output Dispersion Circuit (At MOSFET Turned OFF)

6.2 Frequency Circuit

mode 1: burst operation
mode 2: fixed frequency operation (It operates in maximum frequency.)
mode 3: over load operation (pulse operation is stopped and burst operation is started.)

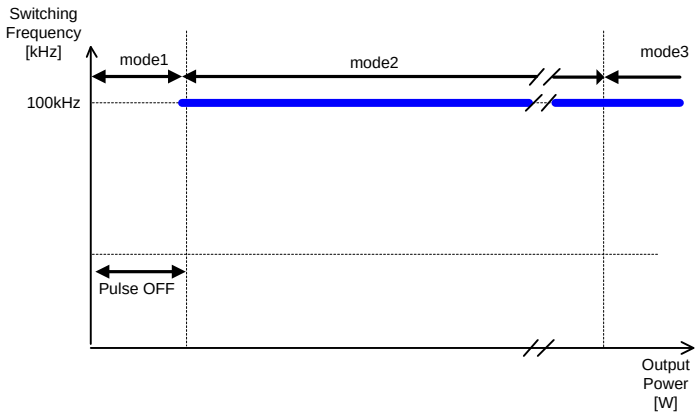

Figure 11. State Transition of Oscillation Frequency

6.3 Frequency Hopping Function

Frequency hopping function achieves low EMI by change the frequency at random. The wave width of frequency's upper limit is ±6 % for basic frequency.

© 2018 ROHM Co., Ltd. All rights reserved.

6 DC/DC Driver – continued

6.4 PWM Error Amp and PWM Comparator

The internal error Amp achieves the reduction of external parts. In addition, this IC adopts current mode method. It makes the design easy.

6.5 Over Current Limiter

This IC has an internal over current limiter per switching cycle. This function monitors the coil current and if it exceeds a certain current, the IC stops switching. Additionally, an internal current detection resistor contributes to reduction of parts and improvement of efficiency. The peak current by which the IC switches to the over load mode is determined by the formula below.

$$Peak\ current = I_{PEAK} + \frac{(V_{DRAIN} - V_{OUT})}{L} \times tdelay$$

Where:
I_{PEAK} is the over current limiter internal the IC.
V_{DRAIN} is the DRAIN voltage.
V_{OUT} is the output voltage.
L is the Coil value.
$tdelay$ is the Delay time after detection of over current limiter.

6.6 Dynamic Over Current Limiter

This IC has a built-in dynamic over current limiter. In case that coil current exceeds I_{DPEAK} (1.60 A Typ) two times consecutively, it stops pulse operation for t_{DPEAK} (128 µs Typ).

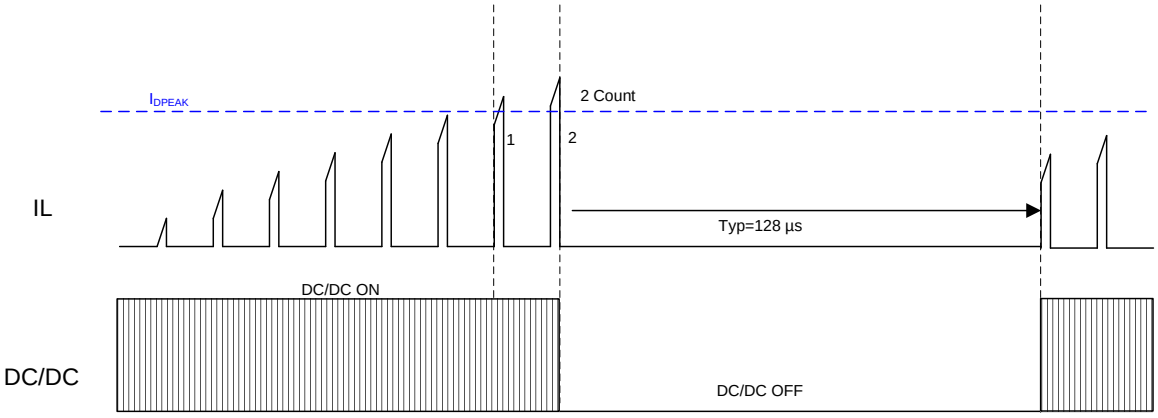

Figure 12. Dynamic Over Current Limiter

© 2018 ROHM Co., Ltd. All rights reserved.

6 DC/DC Driver – continued

6.7 Soft Start Operation

At starting up, this function controls the over current limiter value in order to prevent any excessive voltage or current rising. The details are shown in Figure 13. The IC enables the soft start operation by changing the over current limiter value with time.

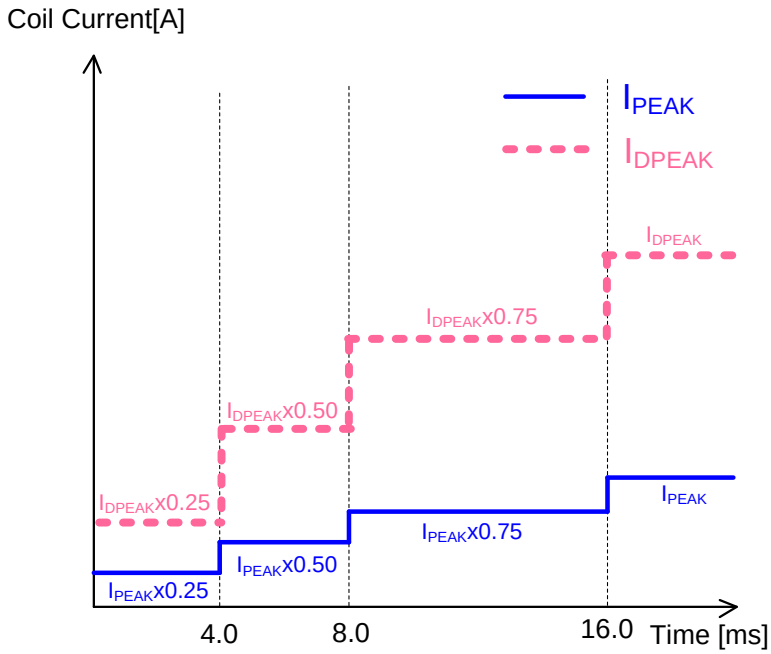

Figure 13. Soft Start Function

7 Output Over Load Protection Function (OLP comparator)

Output over load protection function monitors load status and stops switching at over load. In the over load condition, the output voltage lowers. If a state is electric power set in the IC or more continues for t_{FOLP1} (128 ms Typ), the IC stops switching by judging the status as over load. The recovery after detection of OLP is t_{FOLP2} (512 ms Typ) later.

8 Temperature Protection Circuit

Temperature protection circuit stops the oscillation of DC/DC if the IC becomes more than a certain temperature.

© 2018 ROHM Co., Ltd. All rights reserved.

Description of Blocks – continued

9 Operation Mode of Protection Circuits

The operation mode of protection functions is shown in Table 1.

Table 1. The operation mode of protection functions

Function	VCC Pin Under Voltage Protection	VCC Pin Over Voltage Protection	Over Temperature Protection	Over Power Protection
Detection	V_{UVLO2} (at falling voltage)	V_{OVP1} (at rising voltage)	150 °C (at rising temperature)	the current detected by over current detection or more
Release	V_{UVLO1} (at rising voltage)	V_{OVP2} (at falling voltage)	85 °C (at falling temperature)	under over current detection
Detection Timer	-	100 µs	100 µs	128 ms
Release Timer	-	-	-	512 ms
Type	Auto Recovery	Auto Recovery	Auto Recovery	Auto Recovery
Timer Reset Condition 1	-	VCC UVLO Detection	VCC UVLO Detection	VCC UVLO Detection
Timer Reset Condition 2	-	<Detection> Release Condition <Release> Detection Condition	<Detection> Release Condition <Release> Detection Condition	<Detection> Release Condition <Release> Detection Condition

© 2018 ROHM Co., Ltd. All rights reserved.

Description of Blocks – continued

10 External Components

Each part should be designed considering the input voltage condition and output load condition.
Figure 14 shows application circuit.

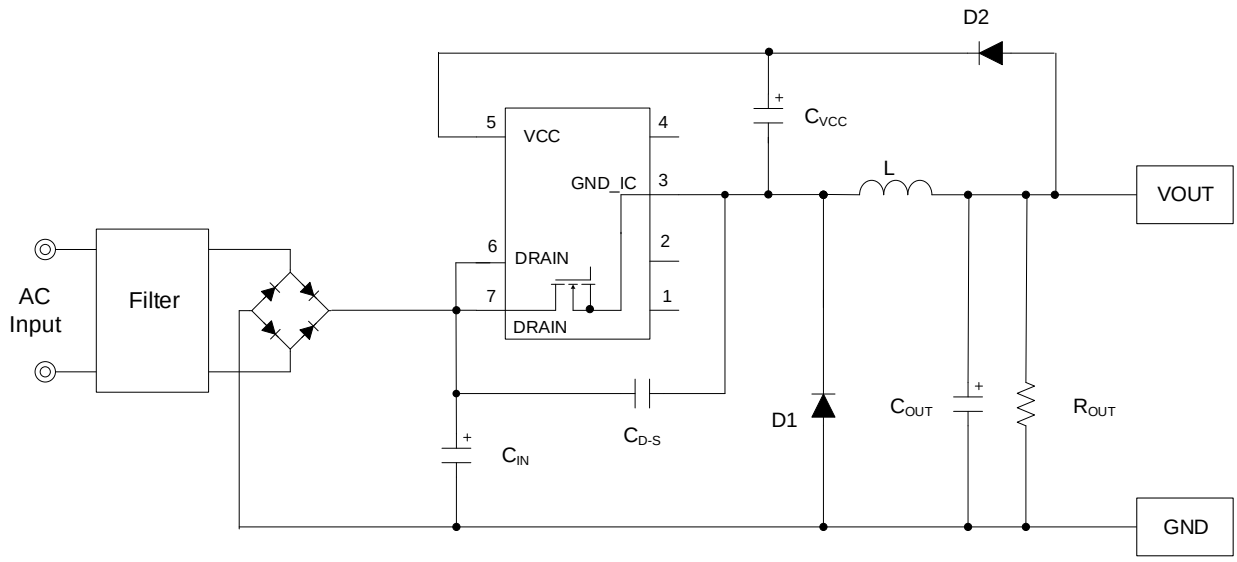

Figure 14. Application circuit

10.1 Output Capacitor C_{OUT}

Output capacitor C_{OUT} should be designed considering the spec of output ripple voltage and to startup until t_{FOLP1}(128 ms Typ). It is recommended to be 100 µF or more.

10.2 Inductor L

The value of inductor should be designed considering the spec of output load condition and the input voltage range. If inductor value is too large, dc/dc operation becomes continuous mode and increases heat. If inductor value is too small, it is impossible that the IC controls in the Minimum ON width t_{MINON} or less, so there is a possibility of over current detection at normal operation load. It is recommended to be 270 µH to 680 µH.

10.3 VCC Pin Capacitor C_{VCC}

The VCC pin Capacitor C_{VCC} adjusts startup time and response of Error AMP.
It is recommended to design less than 1/100 value of C_{OUT}.

10.4 Capacitor between the DRAIN Pin and the GND_IC Pin C_{D-S}

It is recommended to design the capacitor between the DRAIN pin and the GND_IC pin C_{D-S} less than 22 pF.

© 2018 ROHM Co., Ltd. All rights reserved.

Absolute Maximum Ratings (Ta=25 °C)

Parameter	Symbol	Rating	Unit	Conditions
Maximum Applied Voltage 1	V_{MAX1}	-0.3 to +650	V	DRAIN(BM2P134Q)
Maximum Applied Voltage 1	V_{MAX1}	-0.3 to +800	V	DRAIN(BM2P137QK)
Maximum Applied Voltage 2	V_{MAX2}	-0.3 to +32.0	V	VCC
DRAIN Current Pulse	I_{DD}	4.00	A	Consecutive operation (BM2P134Q)
DRAIN Current Pulse	I_{DD}	2.00	A	Consecutive operation (BM2P137QK)
Power Dissipation	Pd	1.00	W	*(Note 1)*
Maximum Junction Temperature	Tjmax	+150	°C	
Storage Temperature Range	Tstg	-55 to +150	°C	

Caution 1: *Operating the IC over the absolute maximum ratings may damage the IC. The damage can either be a short circuit between pins or an open circuit between pins and the internal circuitry. Therefore, it is important to consider circuit protection measures, such as adding a fuse, in case the IC is operated over the absolute maximum ratings.*

Caution 2: *Should by any chance the maximum junction temperature rating be exceeded the rise in temperature of the chip may result in deterioration of the properties of the chip. In case of exceeding this absolute maximum rating, design a PCB with power dissipation taken into consideration by increasing board size and copper area so as not to exceed the maximum junction temperature rating.*

(Note 1) Derate by 4.563 mW/°C when operating Ta=25 °C or more when mounted (on 70 mm x 70 mm x 1.6 mm thick, glass epoxy on single-layer substrate).

Thermal Loss

The thermal design should set operation for the following conditions.

1. The ambient temperature Ta must be 105 °C or less.
2. The IC's loss must be within the Power Dissipation Pd.

The thermal abatement characteristics are as follows.
(PCB: 70 mm x 70 mm x 1.6 mm single layer board, the back side is copper foil)

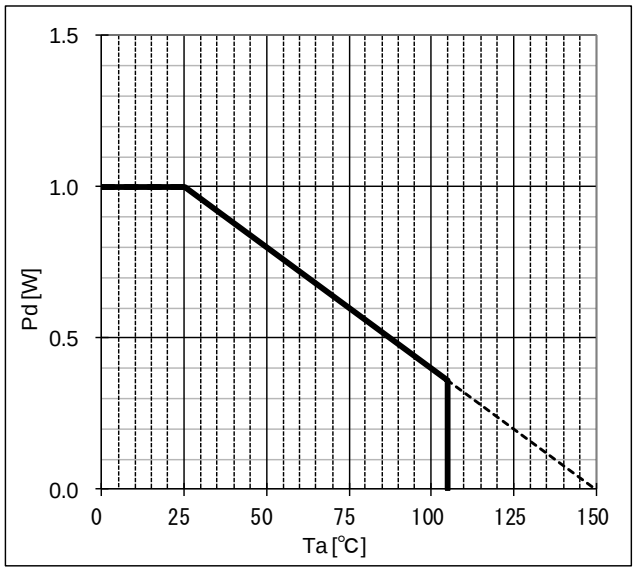

Figure 15. Thermal Abatement Characteristics

© 2018 ROHM Co., Ltd. All rights reserved.

Recommended Operating Conditions

Parameter	Symbol	Specifications			Unit	Conditions
		Min	Typ	Max		
Power Supply Voltage Range 1	V_{DRAIN}	-	-	650	V	DRAIN(BM2P134Q)
Power Supply Voltage Range 1	V_{DRAIN}	-	-	800	V	DRAIN(BM2P137QK)
Power Supply Voltage Range 2	V_{CC}	10.60	-	14.05	V	VCC
Operating Temperature	Topr	-40	-	+105	°C	Surrounding temperature

Electrical Characteristics in MOSFET Part (Unless otherwise noted, Ta=25 °C)

Parameter	Symbol	Specifications			Unit	Conditions
		Min	Typ	Max		
Voltage between DRAIN and SOURCE	$V_{(BR)DDS}$	650	-	-	V	I_D=1 mA / V_{GS}=0 V (BM2P134Q)
DRAIN Leak Current	I_{DSS}	-	0	100	μA	V_{DS}=650 V / V_{GS}=0 V (BM2P134Q)
ON Resistor	$R_{DS(ON)}$	-	4.0	4.5	Ω	I_D=0.25 A / V_{GS}=10 V (BM2P134Q)
Voltage between DRAIN and SOURCE	$V_{(BR)DDS}$	800	-	-	V	I_D=1 mA / V_{GS}=0 V (BM2P137QK)
DRAIN Leak Current	I_{DSS}	-	0	100	μA	V_{DS}=800 V / V_{GS}=0 V (BM2P137QK)
ON Resistor	$R_{DS(ON)}$	-	7.5	10.5	Ω	I_D=0.25 A / V_{GS}=10 V (BM2P137QK)

Electrical Characteristics in Start Circuits Part (Unless otherwise noted, Ta=25 °C)

Parameter	Symbol	Specifications			Unit	Conditions
		Min	Typ	Max		
Start Current 1	I_{START1}	0.150	0.300	0.600	mA	VCC=0 V
Start Current 2	I_{START2}	1.200	3.000	6.000	mA	VCC=7 V
OFF Current	I_{START3}	-	10	20	μA	After UVLO is released
Start Current Switching Voltage	V_{SC}	0.500	0.800	1.200	V	

© 2018 ROHM Co., Ltd. All rights reserved.

Electrical Characteristics in Control IC Part (Unless otherwise noted, Ta=25 °C)

Parameter	Symbol	Specifications			Unit	Conditions
		Min	Typ	Max		
[Circuit Current]						
Circuit Current (ON) 1	I_{ON1}	-	1200	1650	μA	At pulse operation Drain=open
Circuit Current (ON) 2	I_{ON2}	300	450	550	μA	At burst operation
[VCC Pin Protection Function]						
VCC UVLO Voltage 1	V_{UVLO1}	10.20	11.10	12.00	V	VCC rising
VCC UVLO Voltage 2	V_{UVLO2}	8.80	9.70	10.60	V	VCC dropping
VCC UVLO Hysteresis	V_{UVLO3}	-	1.40	-	V	$V_{UVLO3}=V_{UVLO1}-V_{UVLO2}$
VCC Recharge Start Voltage	V_{CHG1}	9.50	10.20	10.90	V	
VCC Recharge Stop Voltage	V_{CHG2}	9.90	10.60	11.30	V	
VCC Recharge Hysteresis	V_{CHG3}	0.20	0.40	0.70	V	
VCC Control Voltage	V_{CNT}	12.87	13.00	13.13	V	
VCC OVP Voltage 1	V_{OVP1}	14.05	14.95	15.85	V	VCC sweep up
VCC OVP Voltage 2	V_{OVP2}	13.44	14.30	15.16	V	VCC sweep down
VCC OVP Hysteresis	V_{OVP3}	-	0.65	-	V	
VCC OVP Timer	t_{COMP}	50	100	150	μs	
Over Temperature Protection 1	T_{SD1}	120	150	180	°C	Control IC part At temperature rising*(Note 2)*
Over Temperature Protection 2	T_{SD2}	-	85	-	°C	Control IC part At temperature dropping*(Note 2)*
Over Temperature Protection Hysteresis	T_{SD3}	-	65	-	°C	*(Note 2)*
[PWM Type DC/DC Driver Block]						
Oscillation Frequency	f_{SW}	94	100	106	kHz	
Frequency Hopping Width	f_{DEL}	-	6.0	-	kHz	
Maximum Duty	D_{MAX}	66	75	84	%	
FB OLP ON Detection Timer	t_{FOLP1}	80	128	176	ms	
FB OLP OFF Detection Timer	t_{FOLP2}	332	512	692	ms	
Soft Start Time 1	t_{SS1}	2.8	4.0	5.2	ms	
Soft Start Time 2	t_{SS2}	5.6	8.0	10.4	ms	
Soft Start Time 3	t_{SS3}	11.2	16.0	20.8	ms	
[Over Current Detection Block]						
Over Current Detection	I_{PEAK}	0.720	0.800	0.880	A	
Over Current Detection in SS1	I_{PEAK1}	-	0.200	-	A	*(Note 2)*
Over Current Detection in SS2	I_{PEAK2}	-	0.400	-	A	*(Note 2)*
Over Current Detection in SS3	I_{PEAK3}	-	0.600	-	A	*(Note 2)*
Dynamic Over Current Detection	I_{DPEAK}	1.440	1.600	1.740	A	
Dynamic Over Current Detection in SS1	I_{DPEAK1}	-	0.400	-	A	*(Note 2)*
Dynamic Over Current Detection in SS2	I_{DPEAK2}	-	0.800	-	A	*(Note 2)*
Dynamic Over Current Detection in SS3	I_{DPEAK3}	-	1.200	-	A	*(Note 2)*
Dynamic Over Current Enforced OFF Time	t_{DPEAK}	64	128	170	μs	
Leading Edge Blanking Time	t_{LEB}	-	150	-	ns	*(Note 2)*
Minimum ON Width	t_{MINON}	-	300	550	ns	*(Note 2)*

(Note 2) Not 100% tested.

© 2018 ROHM Co., Ltd. All rights reserved.

I/O Equivalence Circuit

7	DRAIN	6	DRAIN	–	–	5	VCC
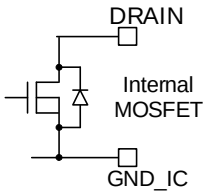		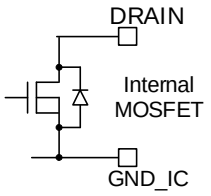		–		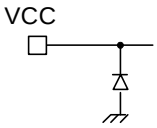	
1	N.C.	2	N.C.	3	GND_IC	4	N.C.
Non Connection		Non Connection		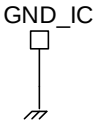		Non Connection	

© 2018 ROHM Co., Ltd. All rights reserved.

Operational Notes

1. **Reverse Connection of Power Supply**
   Connecting the power supply in reverse polarity can damage the IC. Take precautions against reverse polarity when connecting the power supply, such as mounting an external diode between the power supply and the IC's power supply pins.

2. **Power Supply Lines**
   Design the PCB layout pattern to provide low impedance supply lines. Separate the ground and supply lines of the digital and analog blocks to prevent noise in the ground and supply lines of the digital block from affecting the analog block. Furthermore, connect a capacitor to ground at all power supply pins. Consider the effect of temperature and aging on the capacitance value when using electrolytic capacitors.

3. **Ground Voltage**
   Ensure that no pins are at a voltage below that of the ground pin at any time, even during transient condition.

4. **Ground Wiring Pattern**
   When using both small-signal and large-current ground traces, the two ground traces should be routed separately but connected to a single ground at the reference point of the application board to avoid fluctuations in the small-signal ground caused by large currents. Also ensure that the ground traces of external components do not cause variations on the ground voltage. The ground lines must be as short and thick as possible to reduce line impedance.

5. **Recommended Operating Conditions**
   The function and operation of the IC are guaranteed within the range specified by the recommended operating conditions. The characteristic values are guaranteed only under the conditions of each item specified by the electrical characteristics.

6. **Inrush Current**
   When power is first supplied to the IC, it is possible that the internal logic may be unstable and inrush current may flow instantaneously due to the internal powering sequence and delays, especially if the IC has more than one power supply. Therefore, give special consideration to power coupling capacitance, power wiring, width of ground wiring, and routing of connections.

7. **Testing on Application Boards**
   When testing the IC on an application board, connecting a capacitor directly to a low-impedance output pin may subject the IC to stress. Always discharge capacitors completely after each process or step. The IC's power supply should always be turned off completely before connecting or removing it from the test setup during the inspection process. To prevent damage from static discharge, ground the IC during assembly and use similar precautions during transport and storage.

8. **Inter-pin Short and Mounting Errors**
   Ensure that the direction and position are correct when mounting the IC on the PCB. Incorrect mounting may result in damaging the IC. Avoid nearby pins being shorted to each other especially to ground, power supply and output pin. Inter-pin shorts could be due to many reasons such as metal particles, water droplets (in very humid environment) and unintentional solder bridge deposited in between pins during assembly to name a few.

9. **Unused Input Pins**
   Input pins of an IC are often connected to the gate of a MOS transistor. The gate has extremely high impedance and extremely low capacitance. If left unconnected, the electric field from the outside can easily charge it. The small charge acquired in this way is enough to produce a significant effect on the conduction through the transistor and cause unexpected operation of the IC. So unless otherwise specified, unused input pins should be connected to the power supply or ground line.

© 2018 ROHM Co., Ltd. All rights reserved.

Operational Notes – continued

10. Regarding the Input Pin of the IC

This IC contains P+ isolation and P substrate layers between adjacent elements in order to keep them isolated. P-N junctions are formed at the intersection of the P layers with the N layers of other elements, creating a parasitic diode or transistor. For example (refer to figure below):

When GND > Pin A and GND > Pin B, the P-N junction operates as a parasitic diode.
When GND > Pin B, the P-N junction operates as a parasitic transistor.

Parasitic diodes inevitably occur in the structure of the IC. The operation of parasitic diodes can result in mutual interference among circuits, operational faults, or physical damage. Therefore, conditions that cause these diodes to operate, such as applying a voltage lower than the GND voltage to an input pin (and thus to the P substrate) should be avoided.

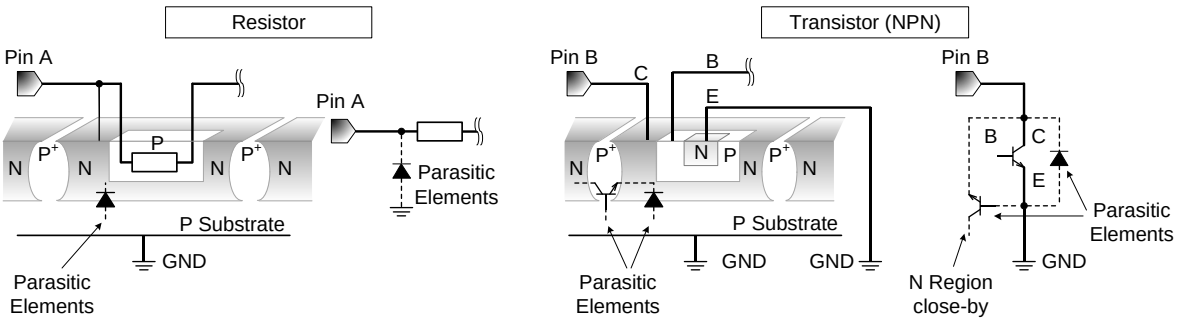

Figure 16. Example of IC Structure

11. Ceramic Capacitor

When using a ceramic capacitor, determine a capacitance value considering the change of capacitance with temperature and the decrease in nominal capacitance due to DC bias and others.

12. Thermal Shutdown Circuit (TSD)

This IC has a built-in thermal shutdown circuit that prevents heat damage to the IC. Normal operation should always be within the IC's maximum junction temperature rating. If however the rating is exceeded for a continued period, the junction temperature (Tj) will rise which will activate the TSD circuit that will turn OFF power output pins. When the Tj falls below the TSD threshold, the circuits are automatically restored to normal operation.
Note that the TSD circuit operates in a situation that exceeds the absolute maximum ratings and therefore, under no circumstances, should the TSD circuit be used in a set design or for any purpose other than protecting the IC from heat damage.

13. Over Current Protection Circuit (OCP)

This IC incorporates an integrated overcurrent protection circuit that is activated when the load is shorted. This protection circuit is effective in preventing damage due to sudden and unexpected incidents. However, the IC should not be used in applications characterized by continuous operation or transitioning of the protection circuit.

© 2018 ROHM Co., Ltd. All rights reserved.

Ordering Information

B	M	2	P	1	3	4	Q

B	M	2	P	1	3	7	Q	K

Lineup

I_{DD} (A)	V_{DRAIN}(Max) (V)	$R_{DS(ON)}$(Typ) (Ω)	Part Number Marking	Orderable Part Number
4.00	650	4.0	BM2P134Q	BM2P134Q
2.00	800	7.5	BM2P137QK	BM2P137QK

Making Diagram

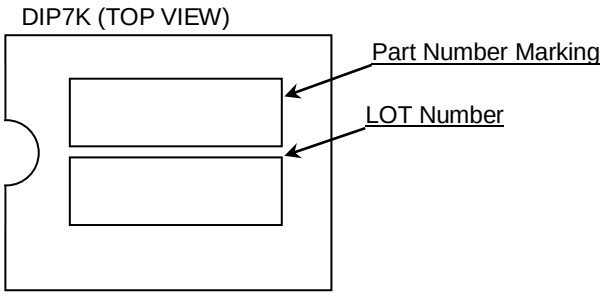

© 2018 ROHM Co., Ltd. All rights reserved.

Physical Dimension and Packing Information

Package Name	DIP7K

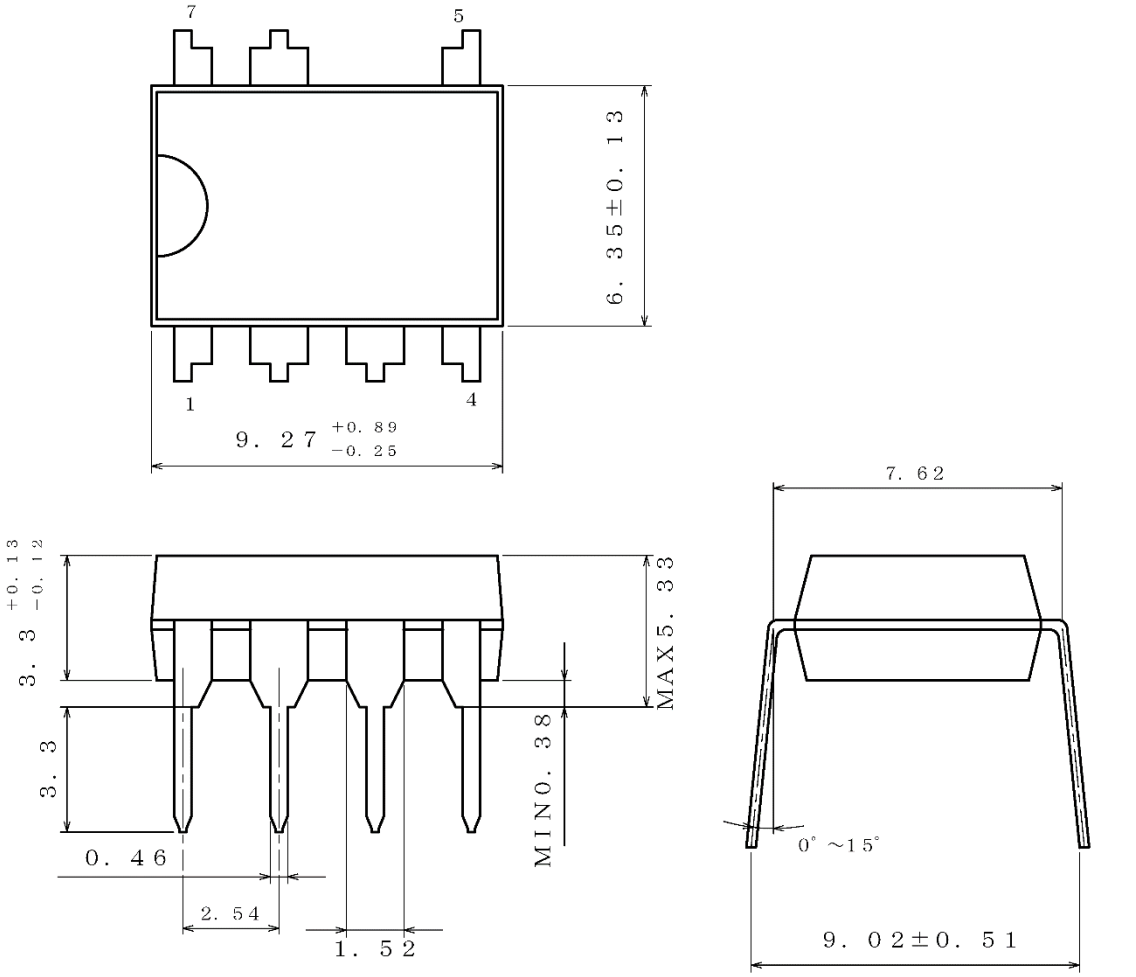

(UNIT : mm)
PKG : DIP7K
Drawing No. EX001-0076

< Container Information >

Container	Tube
Quantity	2000pcs
Direction of feed	Packing orientation is same in tube

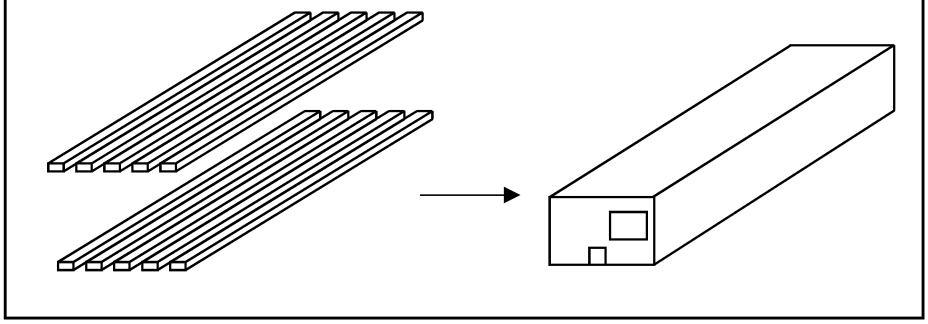

© 2018 ROHM Co., Ltd. All rights reserved.

Revision History

Date	Revision	Changes
11.Oct.2018	001	New release

© 2018 ROHM Co., Ltd. All rights reserved.

Notice

Precaution on using ROHM Products

1. Our Products are designed and manufactured for application in ordinary electronic equipment (such as AV equipment, OA equipment, telecommunication equipment, home electronic appliances, amusement equipment, etc.). If you intend to use our Products in devices requiring extremely high reliability (such as medical equipment (Note 1), transport equipment, traffic equipment, aircraft/spacecraft, nuclear power controllers, fuel controllers, car equipment including car accessories, safety devices, etc.) and whose malfunction or failure may cause loss of human life, bodily injury or serious damage to property ("Specific Applications"), please consult with the ROHM sales representative in advance. Unless otherwise agreed in writing by ROHM in advance, ROHM shall not be in any way responsible or liable for any damages, expenses or losses incurred by you or third parties arising from the use of any ROHM's Products for Specific Applications.

(Note1) Medical Equipment Classification of the Specific Applications

JAPAN	USA	EU	CHINA
CLASSⅢ	CLASSⅢ	CLASSⅡb	CLASSⅢ
CLASSⅣ		CLASSⅢ	

2. ROHM designs and manufactures its Products subject to strict quality control system. However, semiconductor products can fail or malfunction at a certain rate. Please be sure to implement, at your own responsibilities, adequate safety measures including but not limited to fail-safe design against the physical injury, damage to any property, which a failure or malfunction of our Products may cause. The following are examples of safety measures:
   [a] Installation of protection circuits or other protective devices to improve system safety
   [b] Installation of redundant circuits to reduce the impact of single or multiple circuit failure

3. Our Products are designed and manufactured for use under standard conditions and not under any special or extraordinary environments or conditions, as exemplified below. Accordingly, ROHM shall not be in any way responsible or liable for any damages, expenses or losses arising from the use of any ROHM's Products under any special or extraordinary environments or conditions. If you intend to use our Products under any special or extraordinary environments or conditions (as exemplified below), your independent verification and confirmation of product performance, reliability, etc, prior to use, must be necessary:
   [a] Use of our Products in any types of liquid, including water, oils, chemicals, and organic solvents
   [b] Use of our Products outdoors or in places where the Products are exposed to direct sunlight or dust
   [c] Use of our Products in places where the Products are exposed to sea wind or corrosive gases, including Cl_2, H_2S, NH_3, SO_2, and NO_2
   [d] Use of our Products in places where the Products are exposed to static electricity or electromagnetic waves
   [e] Use of our Products in proximity to heat-producing components, plastic cords, or other flammable items
   [f] Sealing or coating our Products with resin or other coating materials
   [g] Use of our Products without cleaning residue of flux (Exclude cases where no-clean type fluxes is used. However, recommend sufficiently about the residue.) ; or Washing our Products by using water or water-soluble cleaning agents for cleaning residue after soldering
   [h] Use of the Products in places subject to dew condensation

4. The Products are not subject to radiation-proof design.

5. Please verify and confirm characteristics of the final or mounted products in using the Products.

6. In particular, if a transient load (a large amount of load applied in a short period of time, such as pulse. is applied, confirmation of performance characteristics after on-board mounting is strongly recommended. Avoid applying power exceeding normal rated power; exceeding the power rating under steady-state loading condition may negatively affect product performance and reliability.

7. De-rate Power Dissipation depending on ambient temperature. When used in sealed area, confirm that it is the use in the range that does not exceed the maximum junction temperature.

8. Confirm that operation temperature is within the specified range described in the product specification.

9. ROHM shall not be in any way responsible or liable for failure induced under deviant condition from what is defined in this document.

Precaution for Mounting / Circuit board design

1. When a highly active halogenous (chlorine, bromine, etc.) flux is used, the residue of flux may negatively affect product performance and reliability.

2. In principle, the reflow soldering method must be used on a surface-mount products, the flow soldering method must be used on a through hole mount products. If the flow soldering method is preferred on a surface-mount products, please consult with the ROHM representative in advance.

For details, please refer to ROHM Mounting specification

© 2015 ROHM Co., Ltd. All rights reserved.

Precautions Regarding Application Examples and External Circuits

1. If change is made to the constant of an external circuit, please allow a sufficient margin considering variations of the characteristics of the Products and external components, including transient characteristics, as well as static characteristics.

2. You agree that application notes, reference designs, and associated data and information contained in this document are presented only as guidance for Products use. Therefore, in case you use such information, you are solely responsible for it and you must exercise your own independent verification and judgment in the use of such information contained in this document. ROHM shall not be in any way responsible or liable for any damages, expenses or losses incurred by you or third parties arising from the use of such information.

Precaution for Electrostatic

This Product is electrostatic sensitive product, which may be damaged due to electrostatic discharge. Please take proper caution in your manufacturing process and storage so that voltage exceeding the Products maximum rating will not be applied to Products. Please take special care under dry condition (e.g. Grounding of human body / equipment / solder iron, isolation from charged objects, setting of Ionizer, friction prevention and temperature / humidity control).

Precaution for Storage / Transportation

1. Product performance and soldered connections may deteriorate if the Products are stored in the places where:
   [a] the Products are exposed to sea winds or corrosive gases, including Cl_2, H_2S, NH_3, SO_2, and NO_2
   [b] the temperature or humidity exceeds those recommended by ROHM
   [c] the Products are exposed to direct sunshine or condensation
   [d] the Products are exposed to high Electrostatic

2. Even under ROHM recommended storage condition, solderability of products out of recommended storage time period may be degraded. It is strongly recommended to confirm solderability before using Products of which storage time is exceeding the recommended storage time period.

3. Store / transport cartons in the correct direction, which is indicated on a carton with a symbol. Otherwise bent leads may occur due to excessive stress applied when dropping of a carton.

4. Use Products within the specified time after opening a humidity barrier bag. Baking is required before using Products of which storage time is exceeding the recommended storage time period.

Precaution for Product Label

A two-dimensional barcode printed on ROHM Products label is for ROHM's internal use only.

Precaution for Disposition

When disposing Products please dispose them properly using an authorized industry waste company.

Precaution for Foreign Exchange and Foreign Trade act

Since concerned goods might be fallen under listed items of export control prescribed by Foreign exchange and Foreign trade act, please consult with ROHM in case of export.

Precaution Regarding Intellectual Property Rights

1. All information and data including but not limited to application example contained in this document is for reference only. ROHM does not warrant that foregoing information or data will not infringe any intellectual property rights or any other rights of any third party regarding such information or data.

2. ROHM shall not have any obligations where the claims, actions or demands arising from the combination of the Products with other articles such as components, circuits, systems or external equipment (including software).

3. No license, expressly or implied, is granted hereby under any intellectual property rights or other rights of ROHM or any third parties with respect to the Products or the information contained in this document. Provided, however, that ROHM will not assert its intellectual property rights or other rights against you or your customers to the extent necessary to manufacture or sell products containing the Products, subject to the terms and conditions herein.

Other Precaution

1. This document may not be reprinted or reproduced, in whole or in part, without prior written consent of ROHM.

2. The Products may not be disassembled, converted, modified, reproduced or otherwise changed without prior written consent of ROHM.

3. In no event shall you use in any way whatsoever the Products and the related technical information contained in the Products or this document for any military purposes, including but not limited to, the development of mass-destruction weapons.

4. The proper names of companies or products described in this document are trademarks or registered trademarks of ROHM, its affiliated companies or third parties.

© 2015 ROHM Co., Ltd. All rights reserved.

General Precaution

1. Before you use our Products, you are requested to carefully read this document and fully understand its contents. ROHM shall not be in any way responsible or liable for failure, malfunction or accident arising from the use of any ROHM's Products against warning, caution or note contained in this document.

2. All information contained in this document is current as of the issuing date and subject to change without any prior notice. Before purchasing or using ROHM's Products, please confirm the latest information with a ROHM sales representative.

3. The information contained in this document is provided on an "as is" basis and ROHM does not warrant that all information contained in this document is accurate and/or error-free. ROHM shall not be in any way responsible or liable for any damages, expenses or losses incurred by you or third parties resulting from inaccuracy or errors of or concerning such information.

© 2015 ROHM Co., Ltd. All rights reserved.

BM2P134Q - Web Page

Part Number	BM2P134Q
Package	DIP7K
Unit Quantity	2000
Minimum Package Quantity	2000
Packing Type	Tube
Constitution Materials List	inquiry
RoHS	Yes