- **Members of the Texas Instruments *Widebus*™ Family**
- **Inputs Are TTL-Voltage Compatible**
- **Provide Extra Data Width Necessary for Wider Address/Data Paths or Buses With Parity**
- **Flow-Through Architecture Optimizes PCB Layout**
- **Distributed V_{CC} and GND Pin Configuration Minimizes High-Speed Switching Noise**
- ***EPIC*™ (Enhanced-Performance Implanted CMOS) 1-µm Process**
- **Package Options Include Plastic 300-mil Shrink Small-Outline (DL) Packages Using 25-mil Center-to-Center Pin Spacings and 380-mil Fine-Pitch Ceramic Flat (WD) Packages Using 25-mil Center-to-Center Pin Spacings**

54ACT16823 . . . WD PACKAGE
74ACT16823 . . . DL PACKAGE
(TOP VIEW)

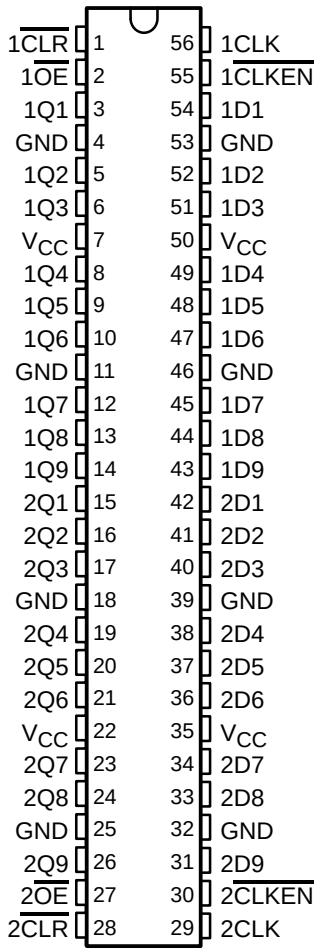

description

These 18-bit flip-flops feature 3-state outputs designed specifically for driving highly-capacitive or relatively low-impedance loads. They are particularly suitable for implementing wider buffer registers, I/O ports, parity bus interfacing, and working registers.

The ’ACT16823 can be used as two 9-bit flip-flops or one 18-bit flip-flop. With the clock-enable ($\overline{CLKEN}$) input low, the D-type flip-flops enter data on the low-to-high transitions of the clock. Taking $\overline{CLKEN}$ high disables the clock buffer, thus latching the outputs. Taking the clear ($\overline{CLR}$) input low causes the Q outputs to go low independently of the clock.

A buffered output-enable ($\overline{OE}$) input can be used to place the outputs in either a normal logic state (high or low logic levels) or a high-impedance state. In the high-impedance state, the outputs neither load nor drive the bus lines significantly.

$\overline{OE}$ does not affect the internal operation of the flip-flops. Old data can be retained or new data can be entered while the outputs are in the high-impedance state.

The 74ACT16823 is packaged in theTI shrink small-outline package, which provides twice the I/O pin count and functionality of standard small-outline packages in the same printed-circuit-board area.

The 54ACT16823 is characterized for operation over the full military temperature range of 55°C to 125°C. The 74ACT16823 is characterized for operation from –40°C to 85°C

Please be aware that an important notice concerning availability, standard warranty, and use in critical applications of Texas Instruments semiconductor products and disclaimers thereto appears at the end of this data sheet.

EPIC and Widebus are trademarks of Texas Instruments Incorporated.

UNLESS OTHERWISE NOTED this document contains PRODUCTION DATA information current as of publication date. Products conform to specifications per the terms of Texas Instruments standard warranty. Production processing does not necessarily include testing of all parameters.

Copyright © 1996, Texas Instruments Incorporated

FUNCTION TABLE
(each 9-bit stage)

INPUTS					OUTPUT
$\overline{OE}$	$\overline{CLR}$	$\overline{CLKEN}$	CLK	D	Q
L	L	X	X	X	L
L	H	L	↑	H	H
L	H	L	↑	L	L
L	H	L	L	X	Q_0
L	H	H	X	X	Q_0
H	X	X	X	X	Z

logic symbol†

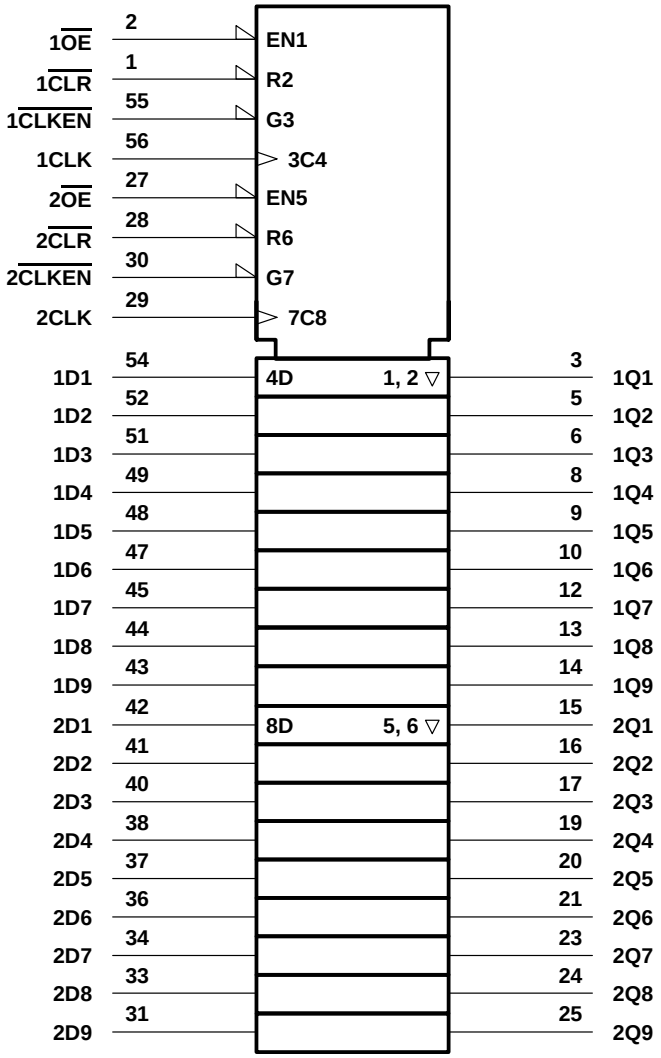

† This symbol is in accordance with ANSI/IEEE Std 91-1984 and IEC Publication 617-12.

logic diagram (positive logic)

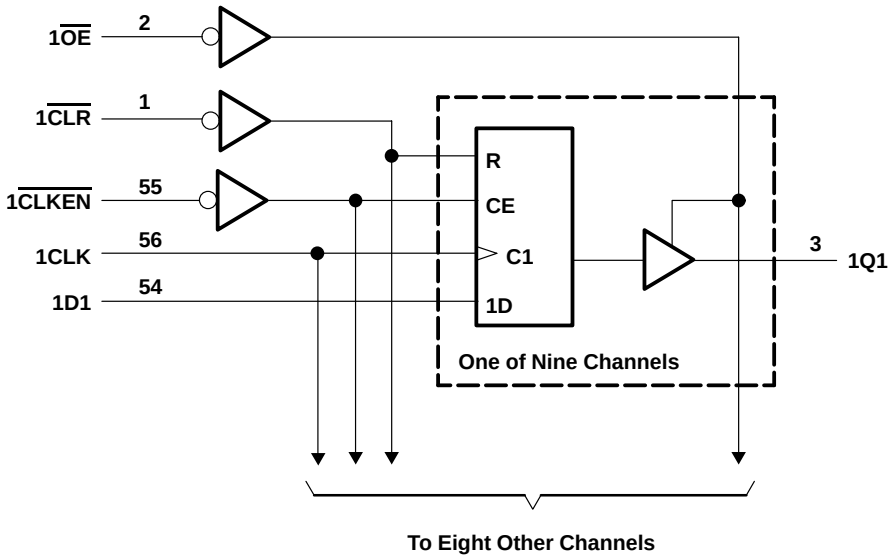

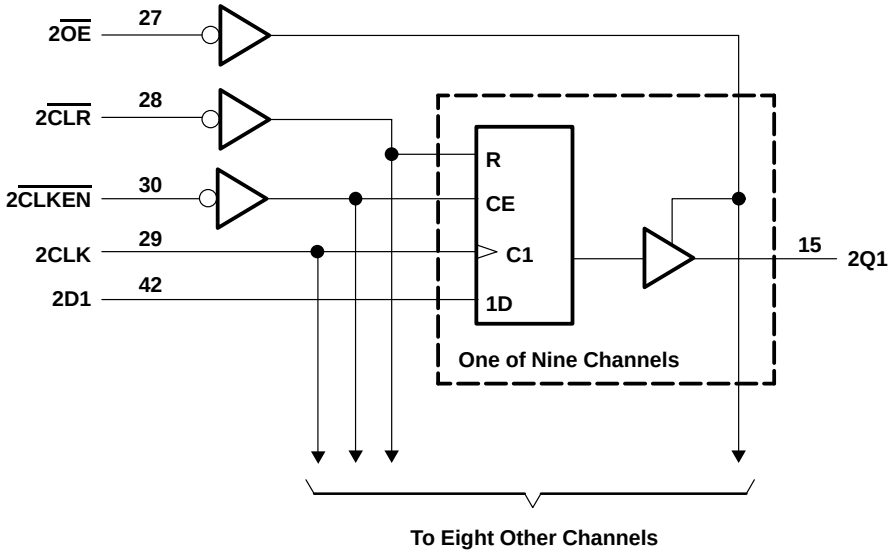

absolute maximum ratings over operating free-air temperature range (unless otherwise noted)†

Supply voltage range, V_{CC} . . . . . –0.5 V to 7 V
Input voltage range, V_I (see Note 1) . . . . . –0.5 V to V_{CC} + 0.5 V
Output voltage range, V_O (see Note 1) . . . . . –0.5 V to V_{CC} + 0.5 V
Input clamp current, I_{IK} (V_I < 0 or V_I > V_{CC}) . . . . . ±20 mA
Output clamp current, I_{OK} (V_O < 0 or V_O > V_{CC}) . . . . . ±50 mA
Continuous output current, I_O (V_O = 0 to V_{CC}) . . . . . ±50 mA
Continuous current through V_{CC} or GND . . . . . ±450 mA
Maximum package power dissipation at T_A = 55°C (in still air) (see Note 2): DL package . . . . . 1.4 W
Storage temperature range, T_{stg} . . . . . –65°C to 150°C

† Stresses beyond those listed under "absolute maximum ratings" may cause permanent damage to the device. These are stress ratings only, and functional operation of the device at these or any other conditions beyond those indicated under "recommended operating conditions" is not implied. Exposure to absolute-maximum-rated conditions for extended periods may affect device reliability.

NOTES: 1. The input and output voltage ratings may be exceeded if the input and output current ratings are observed.
2. The maximum package power dissipation is calculated using a junction temperature of 150°C and a board trace length of 750 mils.

recommended operating conditions (see Note 2)

		54ACT16823			74ACT16823			UNIT
		MIN	NOM	MAX	MIN	NOM	MAX	
V_{CC}	Supply voltage	4.5	5	5.5	4.5	5	5.5	V
V_{IH}	High-level input voltage	2			2			V
V_{IL}	Low-level input voltage			0.8			0.8	V
V_I	Input voltage	0		V_{CC}	0		V_{CC}	V
V_O	Output voltage	0		V_{CC}	0		V_{CC}	V
I_{OH}	High-level output current			–24			–24	mA
I_{OL}	Low-level output current			24			24	mA
$\Delta t/\Delta v$	Input transition rise or fall rate	0		10	0		10	ns/V
T_A	Operating free-air temperature	–55		125	–40		85	°C

NOTE 3: Unused inputs must be held high or low to prevent them from floating.

PRODUCT PREVIEW

PRODUCT PREVIEW information concerns products in the formative or design phase of development. Characteristic data and other specifications are design goals. Texas Instruments reserves the right to change or discontinue these products without notice.

electrical characteristics over recommended operating free-air temperature range (unless otherwise noted)

PARAMETER	TEST CONDITIONS	V_{CC}	T_A = 25°C			54ACT16823		74ACT16823		UNIT
			MIN	TYP	MAX	MIN	MAX	MIN	MAX	
V_{OH}	I_{OH} = –50 µA	4.5 V	4.4			4.4		4.4		V
		5.5 V	5.4			5.4		5.4		
	I_{OH} = –24 mA	4.5 V	3.94			3.8		3.8		
		5.5 V	4.94			4.8		4.8		
	I_{OH}= –75 mA†	5.5 V				3.85		3.85		
V_{OL}	I_{OL} = 50 µA	4.5 V			0.1		0.1		0.1	V
		5.5 V			0.1		0.1		0.1	
	I_{OL} = 24 mA	4.5 V			0.36		0.44		0.44	
		5.5 V			0.36		0.44		0.44	
	I_{OL} = 75 mA†	5.5 V					1.65		1.65	
I_I	V_I = V_{CC} or GND	5.5 V			±0.1		±1		±1	µA
I_{OZ}	V_O = V_{CC} or GND	5.5 V			±0.5		±5		±5	µA
I_{CC}	V_I = V_{CC} or GND, I_O = 0	5.5 V			8		80		80	µA
ΔI_{CC}‡	One input at 3.4 V, Other inputs at V_{CC} or GND	5.5 V			0.9		1		1	mA
C_i	V_I = V_{CC} or GND	5 V		3						pF
C_o	V_O = V_{CC} or GND	5 V		12						pF

† Not more than one output should be tested at a time, and the duration of the test should not exceed 10 ms.
‡ This is the increase in supply current for each input that is at one of the specified TTL voltage levels rather than 0 V or V_{CC}.

timing requirements over recommended operating free-air temperature range, V_{CC} = 5 V ± 0.5 V (unless otherwise noted) (see Figure 1)

			T_A = 25°C		54ACT16823		74ACT16823		UNIT
			MIN	MAX	MIN	MAX	MIN	MAX	
f_{clock}	Clock frequency		0	90	0	90	0	90	MHz
t_w	Pulse duration	$\overline{CLR}$ low	3.3		3.3		3.3		ns
		CLK high or low	5.5		5.5		5.5		
t_{su}	Setup time before CLK↑	$\overline{CLR}$ inactive	0.5		0.5		0.5		ns
		Data	7		7		7		
		$\overline{CLKEN}$ low	3.5		3.5		3.5		
t_h	Hold time after CLK↑	Data	0.5		0.5		0.5		ns
		$\overline{CLKEN}$ high or low	2.5		2.5		2.5		

PRODUCT PREVIEW

PRODUCT PREVIEW information concerns products in the formative or design phase of development. Characteristic data and other specifications are design goals. Texas Instruments reserves the right to change or discontinue these products without notice.

switching characteristics over recommended operating free-air temperature range, V_{CC} = 5 V ± 0.5 V (unless otherwise noted) (see Figure 1)

PARAMETER	FROM (INPUT)	TO (OUTPUT)	T_A = 25°C			54ACT16823		74ACT16823		UNIT
			MIN	TYP	MAX	MIN	MAX	MIN	MAX	
f_{max}			90			90		90		MHz
t_{PLH}	CLK	Q	4.2	7.5	10.6	4.2	12.1	4.2	12.1	ns
t_{PHL}			4.8	8.3	11.5	4.8	12.9	4.8	12.9	
t_{PHL}	$\overline{CLR}$	Q	3.4	7.3	11.2	3.4	12.5	3.4	12.5	ns
t_{PZH}	$\overline{OE}$	Q	2.4	5.9	9.5	2.4	10.7	2.4	10.7	ns
t_{PZL}			3.3	7.1	11.3	3.3	12.8	3.3	12.8	
t_{PHZ}	$\overline{OE}$	Q	5.5	7.6	9.7	5.5	10.3	5.5	10.3	ns
t_{PLZ}			4.6	6.7	8.8	4.6	9.4	4.6	9.4	

PRODUCT PREVIEW

operating characteristics, V_{CC} = 5 V, T_A = 25°C

PARAMETER			TEST CONDITIONS	TYP	UNIT
C_{pd}	Power dissipation capacitance per flip-flop	Outputs enabled	C_L = 50 pF, f = 1 MHz	42	pF
		Outputs disabled		24	

PRODUCT PREVIEW information concerns products in the formative or design phase of development. Characteristic data and other specifications are design goals. Texas Instruments reserves the right to change or discontinue these products without notice.

PARAMETER MEASUREMENT INFORMATION

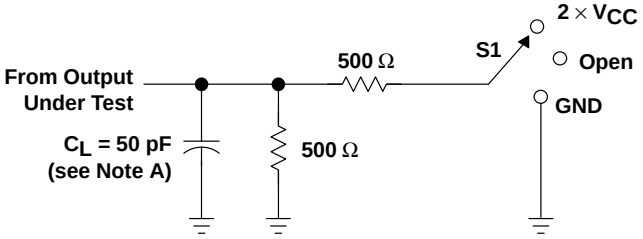

LOAD CIRCUIT

TEST	S1
t_{PLH}/t_{PHL}	Open
t_{PLZ}/t_{PZL}	2 × V_{CC}
t_{PHZ}/t_{PZH}	GND

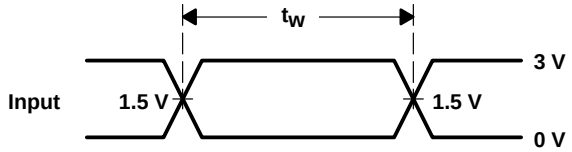

VOLTAGE WAVEFORMS

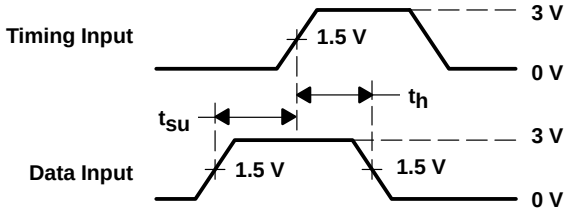

VOLTAGE WAVEFORMS

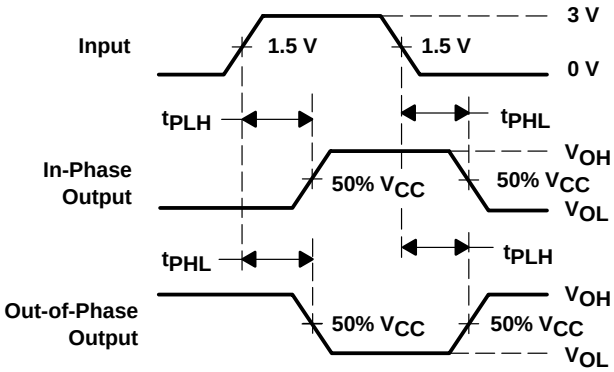

VOLTAGE WAVEFORMS

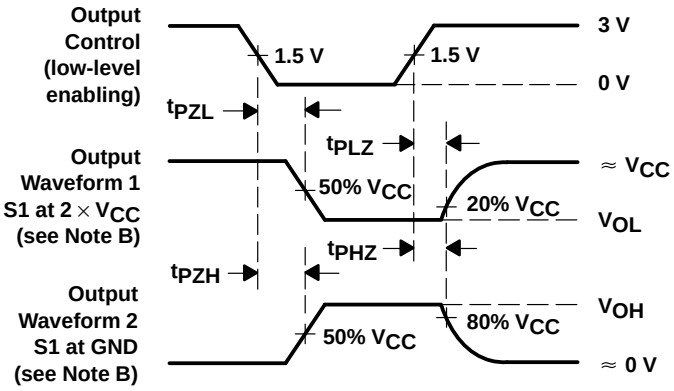

VOLTAGE WAVEFORMS

NOTES: A. C_L includes probe and jig capacitance.
B. Waveform 1 is for an output with internal conditions such that the output is low except when disabled by the output control. Waveform 2 is for an output with internal conditions such that the output is high except when disabled by the output control.
C. All input pulses are supplied by generators having the following characteristics: PRR ≤ 1 MHz, Z_O = 50 Ω, t_r = 3 ns, t_f = 3 ns.
D. The outputs are measured one at a time with one input transition per measurement.

Figure 1. Load Circuit and Voltage Waveforms

IMPORTANT NOTICE

Texas Instruments and its subsidiaries (TI) reserve the right to make changes to their products or to discontinue any product or service without notice, and advise customers to obtain the latest version of relevant information to verify, before placing orders, that information being relied on is current and complete. All products are sold subject to the terms and conditions of sale supplied at the time of order acknowledgment, including those pertaining to warranty, patent infringement, and limitation of liability.

TI warrants performance of its products to the specifications applicable at the time of sale in accordance with TI's standard warranty. Testing and other quality control techniques are utilized to the extent TI deems necessary to support this warranty. Specific testing of all parameters of each device is not necessarily performed, except those mandated by government requirements.

Customers are responsible for their applications using TI components.

In order to minimize risks associated with the customer's applications, adequate design and operating safeguards must be provided by the customer to minimize inherent or procedural hazards.

TI assumes no liability for applications assistance or customer product design. TI does not warrant or represent that any license, either express or implied, is granted under any patent right, copyright, mask work right, or other intellectual property right of TI covering or relating to any combination, machine, or process in which such products or services might be or are used. TI's publication of information regarding any third party's products or services does not constitute TI's approval, license, warranty or endorsement thereof.

Reproduction of information in TI data books or data sheets is permissible only if reproduction is without alteration and is accompanied by all associated warranties, conditions, limitations and notices. Representation or reproduction of this information with alteration voids all warranties provided for an associated TI product or service, is an unfair and deceptive business practice, and TI is not responsible nor liable for any such use.

Resale of TI's products or services with *statements different from or beyond the parameters* stated by TI for that product or service voids all express and any implied warranties for the associated TI product or service, is an unfair and deceptive business practice, and TI is not responsible nor liable for any such use.

Also see: Standard Terms and Conditions of Sale for Semiconductor Products. www.ti.com/sc/docs/stdterms.htm

Mailing Address:

Texas Instruments
Post Office Box 655303
Dallas, Texas 75265

Copyright © 2001, Texas Instruments Incorporated