MAS6240C

Piezo Driver with Multi-Mode Charge Pump

- **Both Single Ended and Differential Output**
- **Three-Step Volume Adjusting**
- **Up to 18Vpp Output from 3V Supply**
- **One Wire Audio & Shutdown Control**
- **High Efficiency**
- **Solution without Inductors**
- **Low External Part Count**

DESCRIPTION

MAS6240 is a piezo driver device that can drive outputs up to 18Vpp from 3V supply. An internal three-mode charge pump generates boosted supply voltage for piezo driver. For adjusting the piezo element sound volume, the charge pump can operate in either of a 1x, 2x or 3x mode. In 1x mode the output voltage is same to the input voltage, in 2x or 3x mode the input voltage is boosted up accordingly 2 or 3 times. Charge pump mode is selected by control pins EN1 and EN2 (see Table 2 on page 3).

MAS6240 is an easy and low-cost solution for piezo driver, since only 4 small value capacitors are needed in addition to sound element - the use of inductors can be avoided. The inductorless design also causes significantly less disturbance to the surrounding circuits making it an ideal choice for sensitive designs. Its charge pump switches at 1MHz, allowing to using as small as 100nF external capacitors.

Control logic is switching the charge pump on at first rising signal of digital input (DIN) pin. The piezo driver is enabled at a second rising edge of a pulse at DIN and the signal is transferred to piezo output VO1. The same signal is inverted into output VO2 for using differential output. The charge pump and piezo driver disable signal will be generated while the signal at DIN has been at low mostly for 50ms. When disabled the piezo driver outputs VO1 and VO2 are pulled actively to GND.

Continuous logic high level at DIN input causes the charge pump to be turned ON but leaves the piezo driver disabled. In that state the VOUT charge pump output of the MAS6240C2 version can be used to power the external LED or any other external circuit up to 5mA load. The output voltage is still selectable at three steps.

In "disabled" mode (DIN has been low for 15ms typically) all functional blocks are switched off to achieve the quiescent current less than 1µA.

Two QFN packaged device versions are available. C1 version has short circuit protection which limits input current taken from the supplies. It is suitable for driving piezo in single ended configuration. C2 version does not have input current limitation but it provides maximum output current drive capability and loudest sound pressure level. It is suited for driving piezo in both single ended and differential configurations. In the die form version D1 the input current limitation is selectable by bonding.

FEATURES

Piezo Driver & Charge Pump

- Thin QFN 2x2 and 3x3 12ld packages
- Three-Step Volume Adjusting
- Both Single Ended and Differential Output
- Up to 18Vpp Output from 3V Supply
- One Wire Audio & Shutdown Control
- Low External Part Count
- Inductorless low EMI solution
- 1 MHz Switching Frequency
- Multi-Mode Charge Pump (1x/2x/3x)

APPLICATIONS

- Wrist Watches
- Alarm Clocks
- Handheld GPS devices
- PDAs
- Portable Device with Sound Feature

BLOCK & APPLICATION DIAGRAM

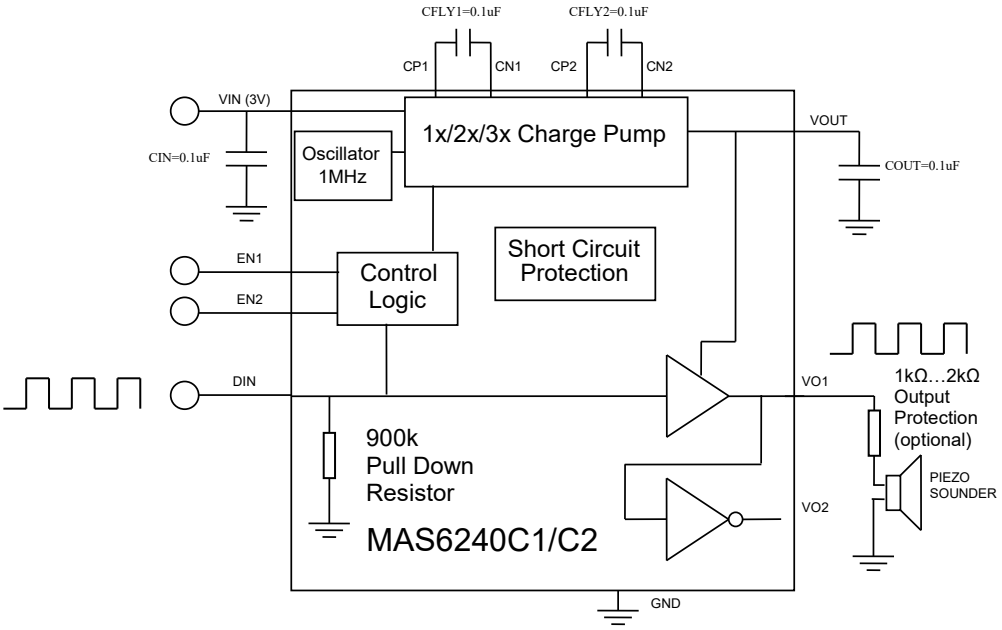

Figure 1. C1 or C2 Version Charge Pump + Single End Piezo Driver (max 9Vpp)

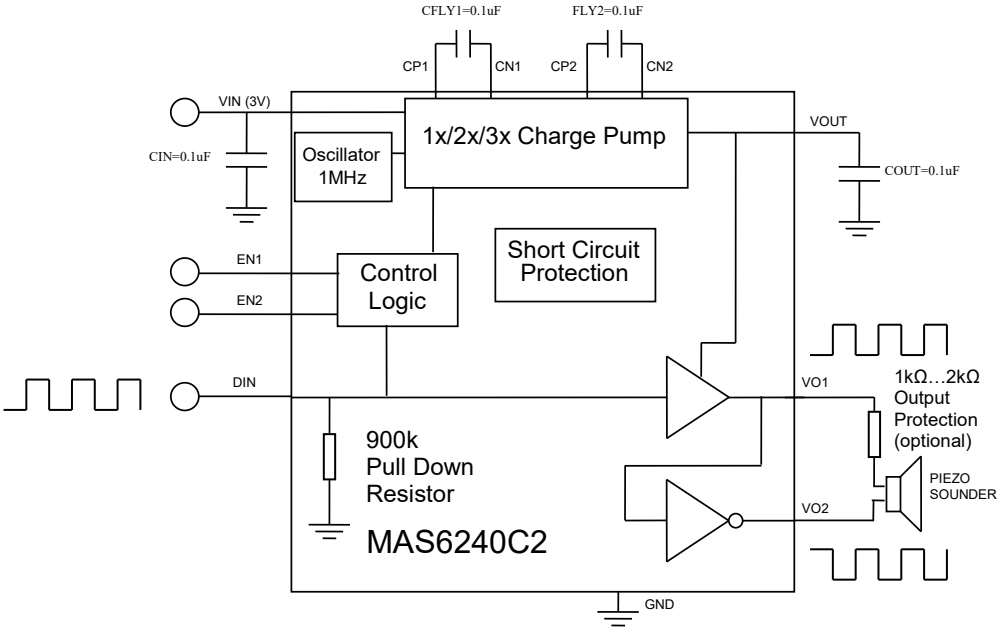

Figure 2. C2 Version Charge Pump + Differential Piezo Driver (max 18Vpp)

The application figures 1 and 2 include optional 1kΩ…2kΩ output protection resistor which offers an extra protection for the over voltage that the piezo element could generate in a mechanical shock.

The input (CIN), fly (CFLY1, CFLY2) and output (COUT) capacitor value selections affect output ripple and inrush current drawn from input during startup. See table 1 for selecting capacitor values at different applications. The capacitors must be ceramic type with low ESR and meeting following minimum voltage ratings: min 6.3V for CIN and CFLY1-CFLY2 and min 16V for COUT.

Table 1. Capacitor value selections at different applications

CIN	CFLY1-2	COUT	Application
100nF	100nF	100nF	Minimum size layout but increased inrush current
10µF	100nF	100nF	Battery cell operated device with low startup inrush current
10µF	100nF	1µF	Low output ripple application with medium inrush current

The voltage ripple at VOUT output is approximately proportional to ratio of piezo load capacitance and charge pump output capacitor (COUT). Thus the output ripple can be reduced by choosing COUT which is much larger relative to piezo capacitance value. However the COUT should not be chosen too large since it lengthens output voltage rise time and increases inrush current drawn from input. For low inrush current the CIN should be made much larger than the COUT.

Table 2 presents charge pump boosting modes selected by control pins EN1 and EN2.

Table 2. Charge Pump boosting mode selection

DIN	EN1	EN2	Charge Pump
0	-	-	OFF
1	0	0	OFF
1	0	1	1x Mode (VIN)
1	1	0	2x Mode (2xVIN)
1	1	1	3x Mode (3xVIN)

Note: In above table pulsed signal at digital input DIN is taken as “1” if pulse low time is less than 5 ms!

ABSOLUTE MAXIMUM RATINGS

Parameter	Symbol	Conditions	Min	Max	Unit
Supply Voltage	VIN	Charge pump in 1x mode. Charge pump in 2x or 3x mode.	-0.3 -0.3	5.5 4.0	V
Outputs and Flying Capacitors Pins Voltages	VOUT, CP2, VO1, VO2		-0.3	12	V
	CP1, CN2,		-0.3	8	V
Voltage Range for Input Pins	DIN, EN1, EN2, CN1		-0.3	VIN + 0.3	V
VOUT Short-Circuit Duration	t_{SC}	Valid for C1 version which has short circuit limitation.		Indefinite	
Storage Temperature			-55	+150	ºC
ESD Rating		Human Body Model (HBM)	±2		kV

Note: Stresses beyond the values listed may cause a permanent damage to the device. The device may not operate under these conditions, but it will not be destroyed.

RECOMMENDED OPERATING CONDITIONS

All voltages with respect to ground.

Parameter	Symbol	Conditions	Min	Typ	Max	Unit
Operating Junction Temperature	T_J		-40		+125	°C
Operating Ambient Temperature	T_A		-40	+27	+85	°C
Operating Supply Voltage	V_{IN}		2.2	3.0	3.3	V

ELECTRICAL CHARACTERISTICS

T_A = -40°C to +85°C, typical values at T_A = 27°C, V_{IN} = 3.0 V, C_1 = 100 nF, C_2 = 100 nF, C_{OUT} = 100 nF, C_{IN} = 100 nF, C_{piezo} = 15 nF, digital input DIN=4kHz; unless otherwise specified

Parameter	Symbol	Conditions	Min	Typ	Max	Unit
Output Voltage	VOUT	VOUT pin voltage towards ground at VIN = 3 V, **Note 1** C1 version: load 15nF C2 version: load 0…5mA 1x Mode 2x Mode 3x Mode	 2.8 5.2 7.2		 3 6 9	V
Shutdown Current	I_{SD}	DIN = 0V, **Note 2**			1	µA
Current Consumption	I_{CC}	Charge Pump (no load): 1x Mode 2x Mode 3x Mode		 85 800 2100	 150 1500 3250	µA
		Single ended application (C_{piezo} = 15nF; f=4kHz): 1x Mode 2x Mode 3x Mode		 0.26 1.5 3.6		mA
		Differential application (C_{piezo} = 15 nF; f=4kHz): 1x Mode 2x Mode 3x Mode, **Note 3**		 0.8 3.5 7.6		mA
Signal Frequency	F_{AUDIO}		0.2	4	8	kHz
Internal Switching Frequency (Charge Pump)	F_{OSC}		0.6	1	1.8	MHz
VOUT Turn-ON Time (From DIN signal HIGH to 90% VOUT steady state)	t_{ON}	C1 version 1x Mode 2x Mode 3x Mode		 10 130 400	 100 300 800	µs
		C2 version 1x Mode 2x Mode 3x Mode		 6 30 60	 100 200 300	µs
Shut Down delay	t_{OFF}	Time before device shutdown after DIN signal goes to LOW	5	15	50	ms
Short Circuit Current	I_{SC}	From VIN pin, **Note 4** C1 version with current limitation C2 version	 5	 10	 50 150	mA
Control Input Threshold	V_{IH} V_{IL}	EN1, EN2, DIN pins	1.6		 0.55	V V
Control Input Current	I_{IH} I_{IL}	V_{DIN} = 3V, (900kΩ pull down) V_{DIN} = 0V		3.4 0	7 1	µA µA
	I_{IH} I_{IL}	V_{DIN} = 3V $V_{EN1,EN2}$ = 3V, (900kΩ pull down) $V_{EN1,EN2}$ = 0V		 3.4 0	 7 1	 µA µA
	I_{IH} I_{IL}	V_{DIN} = 0V, **Note 5** $V_{EN1,EN2}$ = 3V $V_{EN1,EN2}$ = 0V		 0 0	 1 1	 µA µA

Note 1: C1 version is limited for capacitive load only. C2 version can be also used to drive dc-load from VOUT.
Note 2: DIN has been low at least 50 ms.
Note 3: For differential 3x mode it is recommended to use C2 version due to limited current drive capability of C1 version.
Note 4: Short circuit protection in 2x and 3x Modes
Note 5: EN1 and EN2 pins are at high-Z state while V_{DIN}=0V.

DETAILED DESCRIPTION

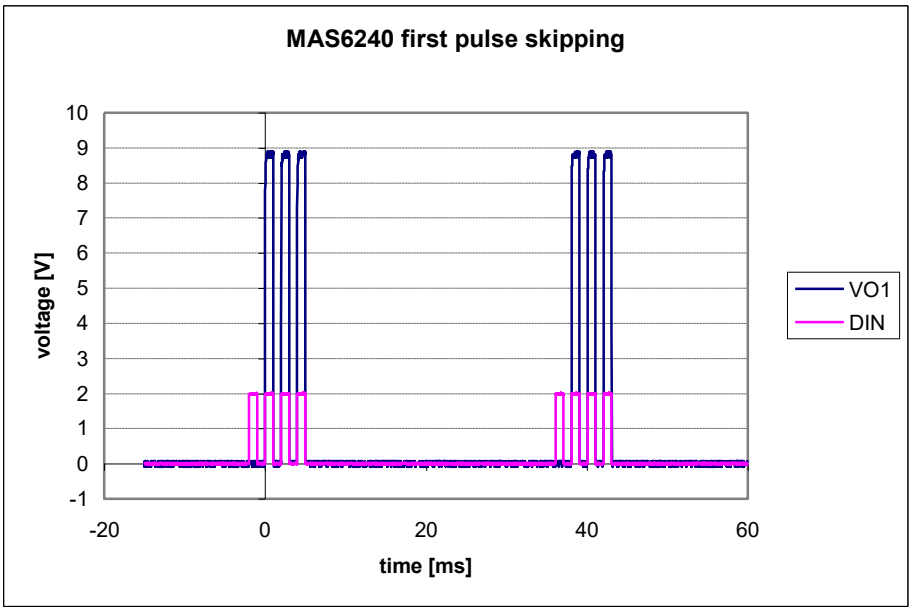

Figure 3. Enabling output VO1

The piezo driver is enabled at the second rising edge of the signal at DIN, thus the signal is transferred to the piezo output VO1. An inverted output VO2 is enabled at the same time, but it is optional to take it in use. Control logic is switching the charge pump on at first rising signal of digital input DIN pin. If only one rising edge is fed to the input DIN, the piezo driver remains disabled. This makes it possible to control e.g. a white LED or other device through pin VOUT while charge pump is enabled, without enabling the piezo driver. The VO1 and VO2 outputs are at GND when the piezo driver is disabled.

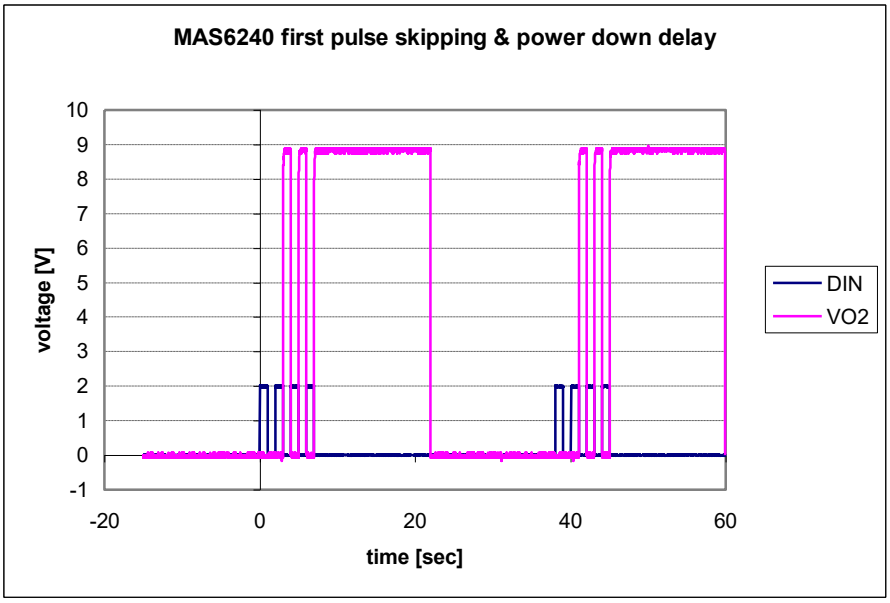

Figure 4. Disabling VO2

Figure 4 is drawn in the case of VO2. The charge pump and piezo driver disable signal will be generated after the signal at DIN has been low at mostly for 50 ms. In the figure 4 the switch-off delay is about 15 ms. Again when new pulses are fed into DIN, the charge pump and piezo driver will be enabled.

DEVICE OUTLINE CONFIGURATION

QFN 2x2 12ld **QFN 3x3 12ld**

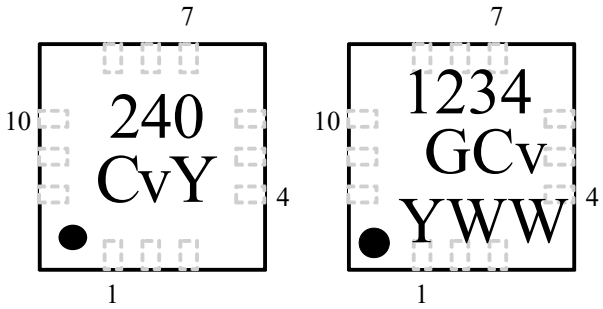

Top Marking Information:
240 & 1234 = Product Number
Cv = Version Number
G = Lead Free, RoHS Compliant Package
Y = Year WW = Week

QFN-12 2x2x0.5, QFN-12 3x3x0.75 PIN DESCRIPTION

Pin Name	Pin	Type	Function	Note
EN1	1	DI	Charge pump mode selection input 1	
EN2	2	DI	Charge pump mode selection input 2	
DIN	3	DI	Enable signal + Digital signal input	
CN1	4	AI/O	Flying capacitor 1 negative terminal	
GND	5	G	Supply ground	
VO2	6	DO	Digital audio signal output 2	
VO1	7	DO	Digital audio signal output 1	
CN2	8	AI/O	Flying capacitor 2 negative terminal	
CP1	9	AI/O	Flying capacitor 1 positive terminal	
VOUT	10	AO	Charge pump output	
CP2	11	AI/O	Flying capacitor 2 positive terminal	
VIN	12	P	Power supply	
EXP_PAD	-	P	Exposed pad connected to GND	1

G = Ground, P = Power, D = Digital, A = Analog, I = Input, O = Output
Note1: On PCB the exposed can be either connected to GND or left floating.

PACKAGE (QFN 2x2x0.5 12ld) OUTLINE

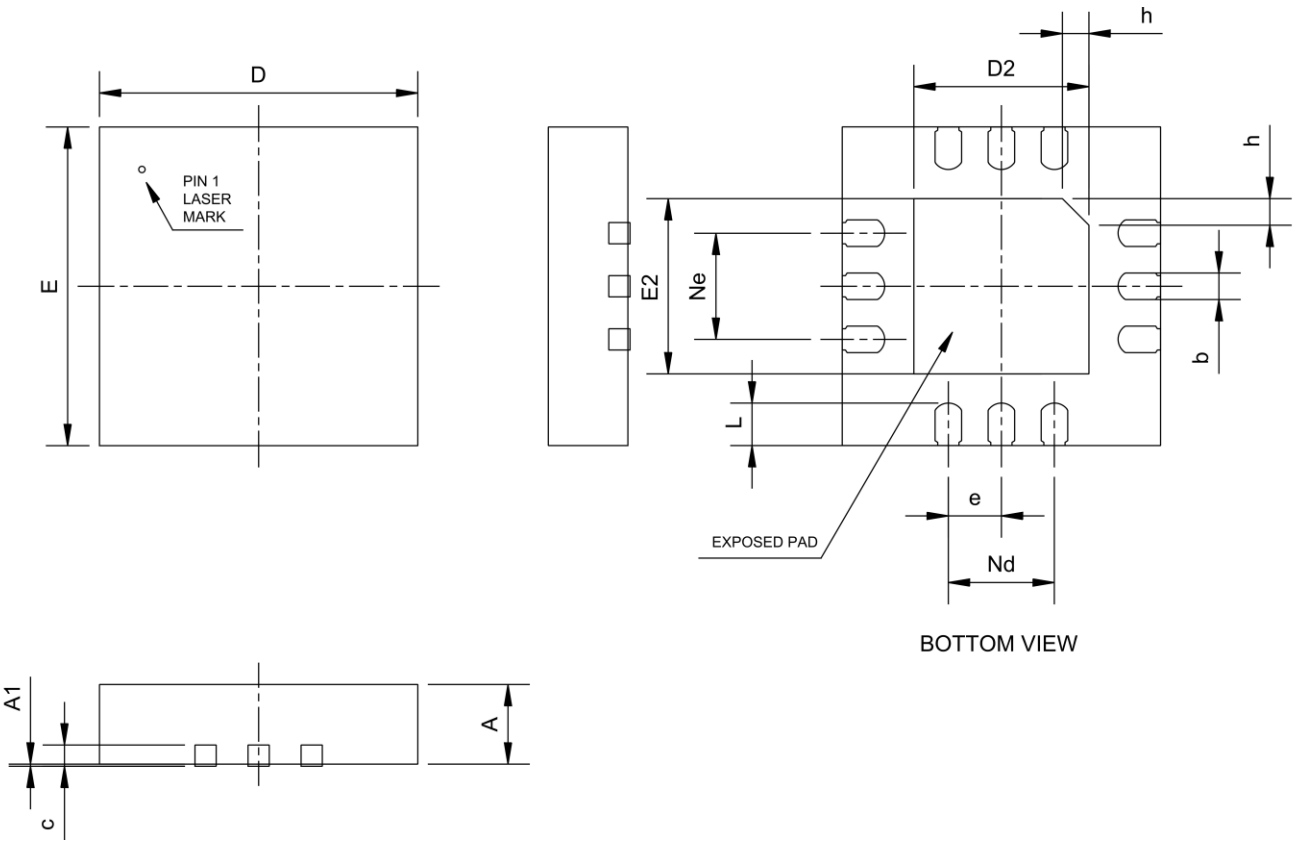

Symbol	Min	Nom	Max	Unit
PACKAGE DIMENSIONS				
A	0.45	0.5	0.55	mm
A1	0	0.02	0.05	mm
b	0.15	0.20	0.25	mm
c	0.10	0.15	0.20	mm
D	1.90	2.00	2.10	mm
D2 (Exposed.pad)	1.00	1.10	1.20	mm
e	0.40 BSC			mm
Ne	0.80 BSC			mm
Nd	0.80 BSC			mm
E	1.90	2.00	2.10	mm
E2 (Exposed.pad)	1.00	1.10	1.20	mm
L	0.15	0.20	0.25	mm
h	0.15	0.20	0.25	mm

Dimensions do not include mold or interlead flash, protrusions or gate burrs.

QFN 2x2x0.5 12ld PCB LAND PATTERN

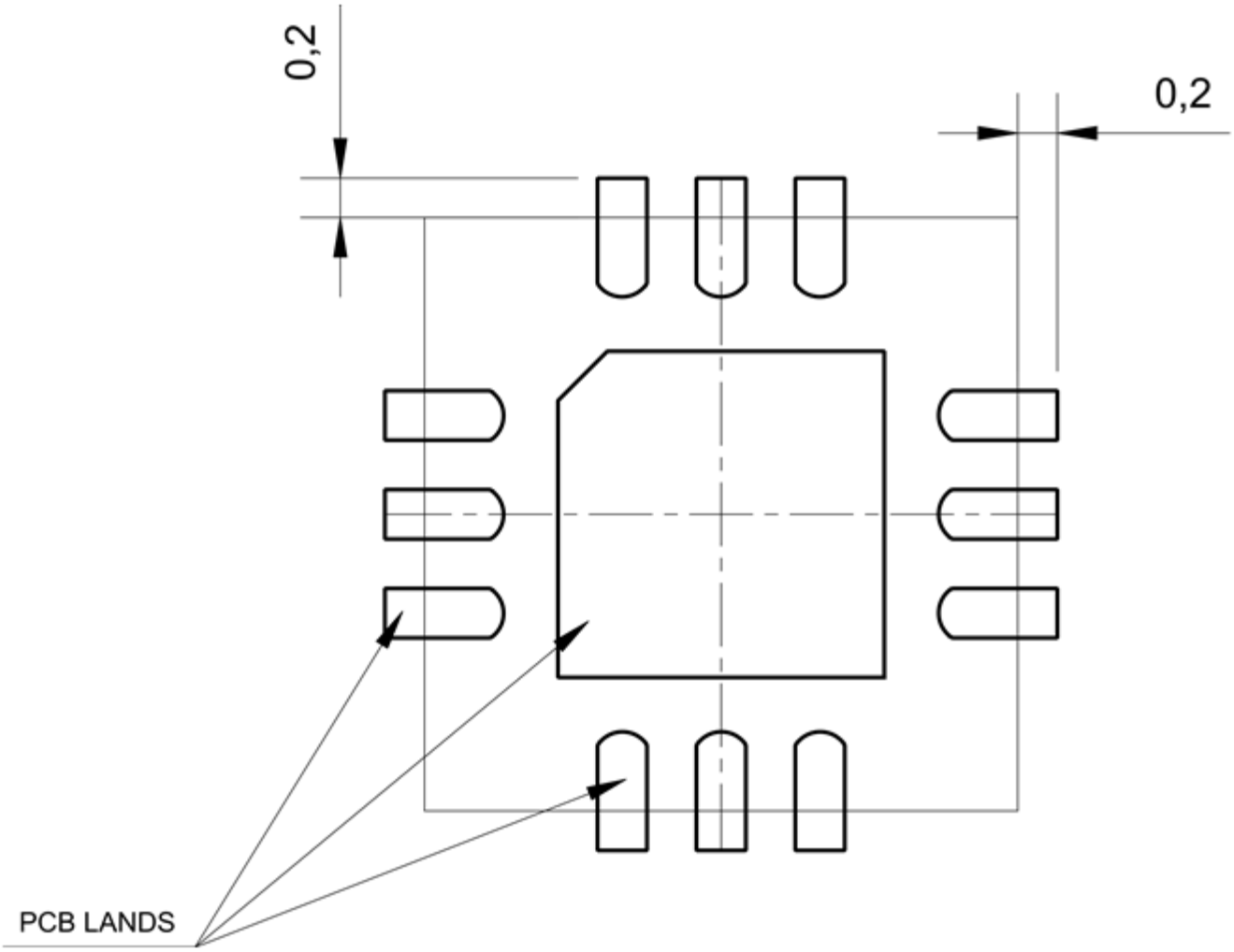

Notes

- I/O lands should be 0.2mm longer than QFN pads and extend the same 0.2mm outside package outline
- exposed pad land size should be the same as QFN exposed pad size
- solder resist opening should be 120µm…150µm larger than the land size resulting in 60µm…75µm clearance between copper land and solder resist

PACKAGE (QFN 3x3x0.75 12ld) OUTLINE

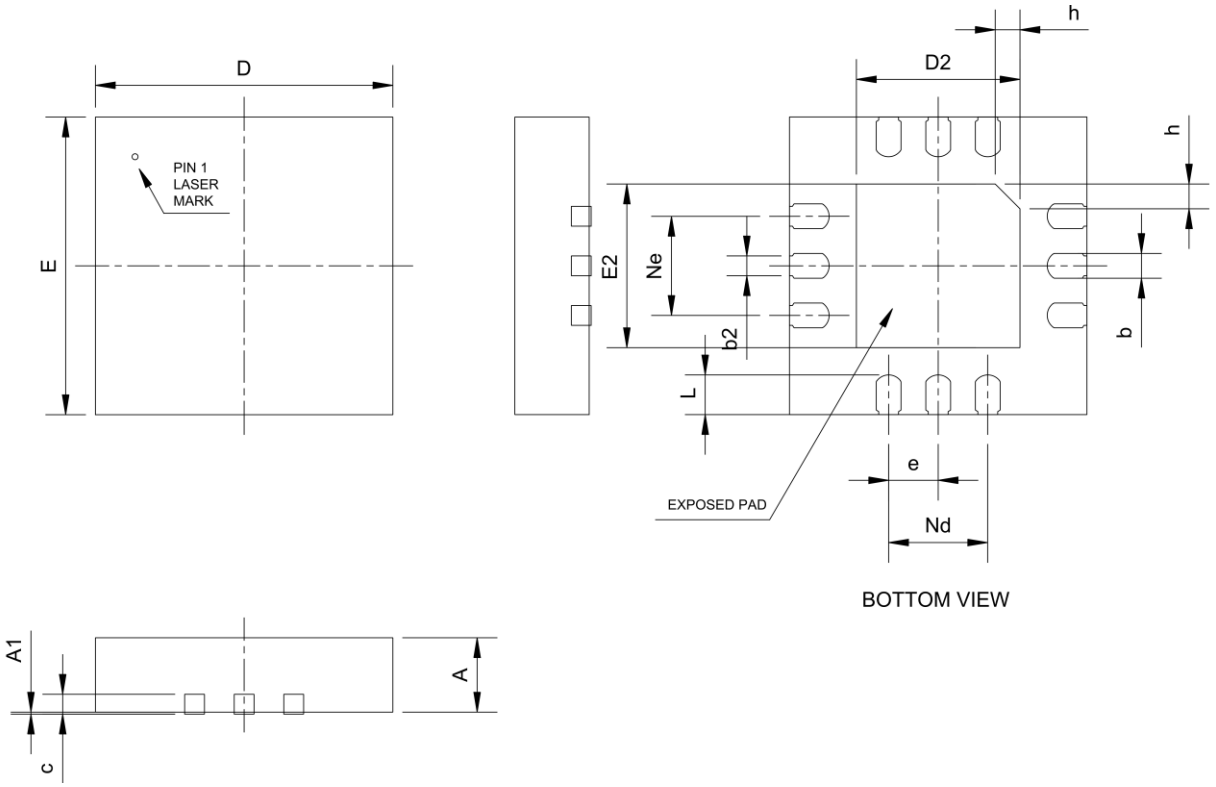

Symbol	Min	Nom	Max	Unit
PACKAGE DIMENSIONS				
A	0.70	0.75	0.80	mm
A1	---	0.02	0.05	mm
b	0.20	0.25	0.30	mm
b2	0.15	0.20	0.25	mm
c	0.18	0.20	0.25	mm
D	2.90	3.00	3.10	mm
D2 (Exposed.pad)	1.55	1.65	1.75	mm
e	0.50 BSC			mm
Ne	1.00 BSC			mm
Nd	1.00 BSC			mm
E	2.90	3.00	3.10	mm
E2 (Exposed.pad)	1.55	1.65	1.75	mm
L	0.35	0.40	0.45	mm
h	0.20	0.25	0.30	mm

Dimensions do not include mold or interlead flash, protrusions or gate burrs.

QFN 3x3x0.75 12ld PCB LAND PATTERN

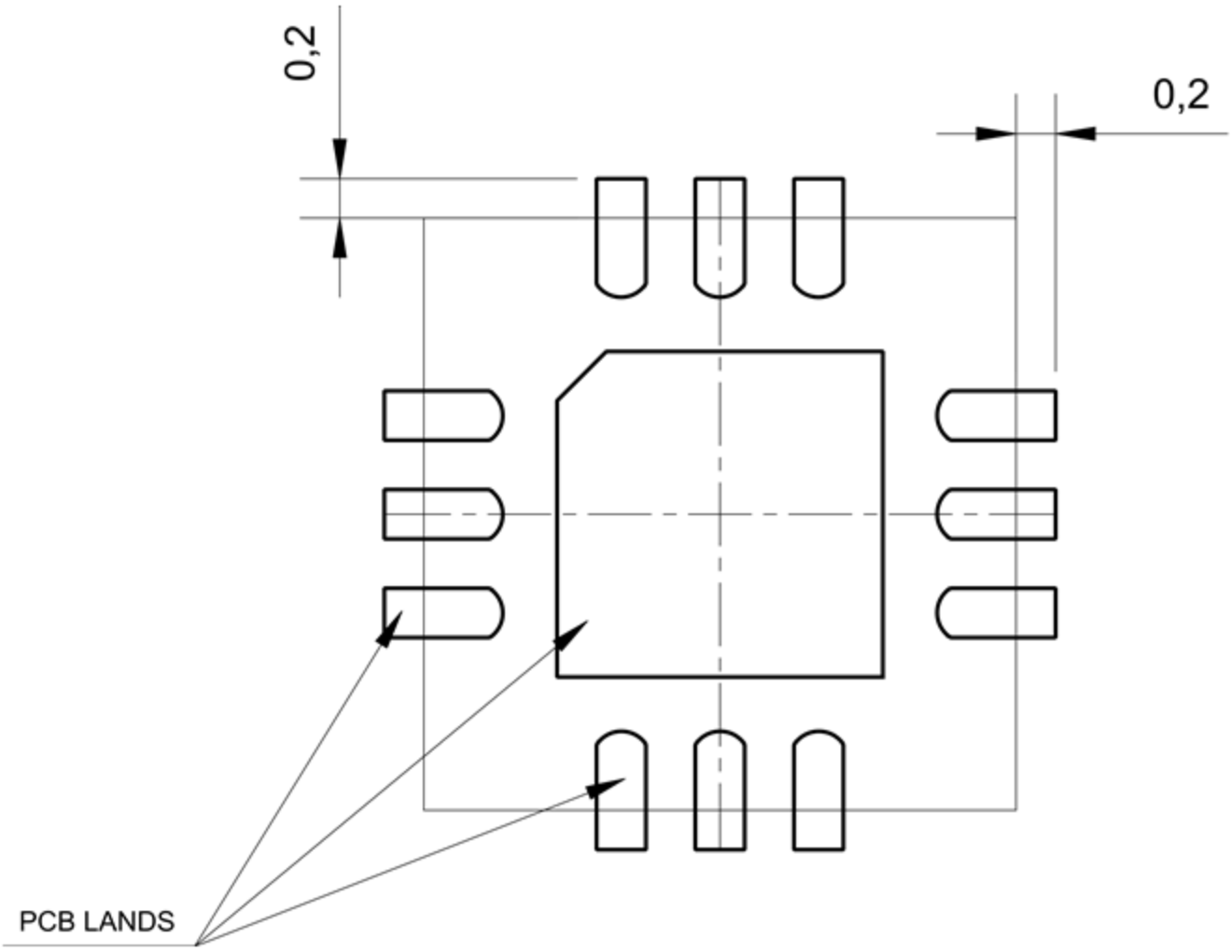

Notes

- I/O lands should be 0.2mm longer than QFN pads and extend the same 0.2mm outside package outline
- exposed pad land size should be the same as QFN exposed pad size
- solder resist opening should be 120µm…150µm larger than the land size resulting in 60µm…75µm clearance between copper land and solder resist

SOLDERING INFORMATION

◆ **For Lead-Free / Green QFN 2mm x 2mm x 0.5mm and 3mm x 3mm x 0.75mm**

Resistance to Soldering Heat	According to RSH test IEC 68-2-58/20
Maximum Temperature	260°C
Maximum Number of Reflow Cycles	3
Reflow profile	Thermal profile parameters stated in IPC/JEDEC J-STD-020 should not be exceeded. http://www.jedec.org
Lead Finish	7.62 - 25.4 µm, Matte Tin

QFN 2x2x0.5 EMBOSSED TAPE SPECIFICATIONS

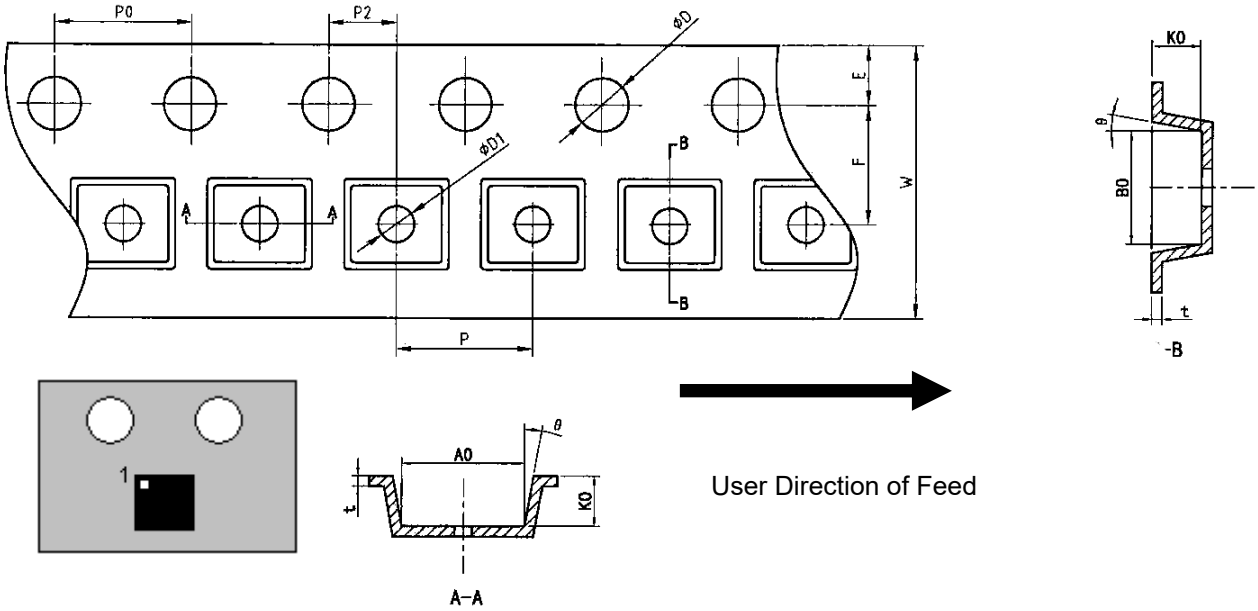

Orientation on tape

Dimension	Min/Max	Unit
A0	2.13 ±0.05	mm
B0	2.13 ±0.05	mm
D	1.50 ±0.1	mm
D1	1.00 +0.25/-0.00	mm
E	1.75 ±0.10	mm
F	3.50 ±0.05	mm
K0	0.88 ±0.05	mm
P	4.00 ±0.10	mm
P0	4.00 ±0.10	mm
10P0	40.00 ±0.20	mm
P2	2.00 ±0.05	mm
t	0.254 ±0.02	mm
W	8.00 +0.3/-0.1	mm
θ	5 MAX	°

Reel Material: Conductive, Plastic Antistatic or Static Dissipative
Carrier Tape Material: Conductive
Cover Tape Material: Static Dissipative

QFN 3x3x0.75 EMBOSSED TAPE SPECIFICATIONS

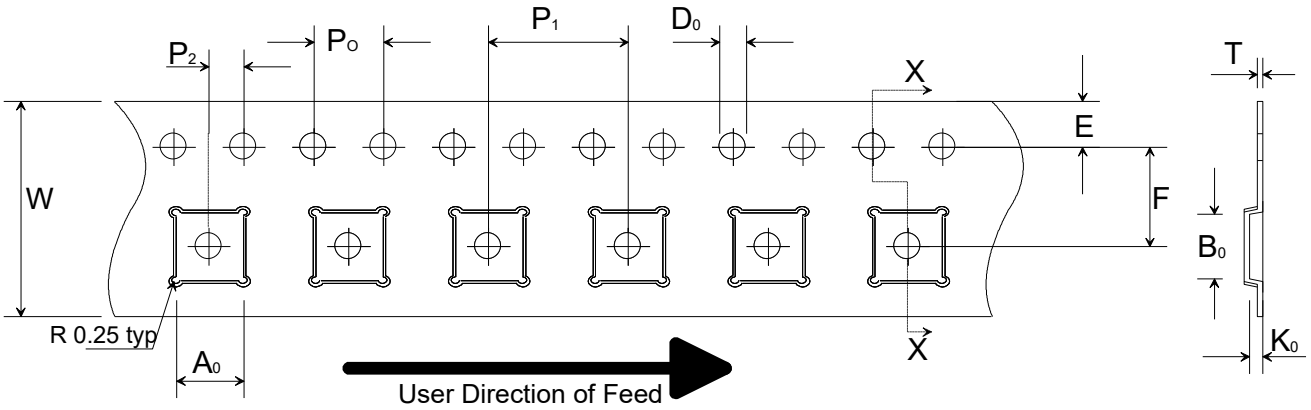

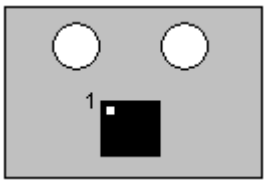

Orientation on tape

Dimension	Min/Max	Unit
A_o	3.30 ±0.10	mm
B_o	3.30 ±0.10	mm
D_o	1.50 +0.1/-0.0	mm
E	1.75	mm
F	5.50 ±0.05	mm
K_o	1.10 ±0.10	mm
P_o	4.0	mm
P_1	8.0 ±0.10	mm
P_2	2.0 ±0.05	mm
T	0.3 ±0.05	mm
W	12.00 ±0.3	mm

Reel Material: Conductive, Plastic Antistatic or Static Dissipative
Carrier Tape Material: Conductive
Cover Tape Material: Static Dissipative

ORDERING INFORMATION

Product Code	Product	Package	Comments
MAS6240C1HP06	Piezo Driver with Input Current Limiting	QFN 3x3x0.75 12ld, Pb Free, RoHS Compliant, MSL=1	Ø13” Tape and Reel 5000 pcs / r
MAS6240C1HP09	Piezo Driver with Input Current Limiting	QFN 3x3x0.75 12ld, Pb Free, RoHS Compliant, MSL=1	Tape 500 pcs
MAS6240C2Q2106	Piezo Driver without Input Current Limiting	QFN 2x2x0.5 12ld, Pb Free, RoHS Compliant, MSL=1	Ø7” Tape and Reel 3000 pcs / r
MAS6240C2HP06	Piezo Driver without Input Current Limiting	QFN 3x3x0.75 12ld, Pb Free, RoHS Compliant, MSL=1	Ø13” Tape and Reel 5000 pcs / r
MAS6240C2HP09	Piezo Driver without Input Current Limiting	QFN 3x3x0.75 12ld, Pb Free, RoHS Compliant, MSL=1	Tape 500 pcs
MAS6240D1TC00	Piezo Driver, Input Current Limiting Selectable by Bonding	EWS Tested 8” wafers, thickness 395 µm	
MAS6240D1TC05	Piezo Driver, Input Current Limiting Selectable by Bonding	395 µm thick dies in waffle pack	

◆ The formation of product code

An example for MAS6240C1HP06:

MAS6240	**C**	**1**	**HP**	**06**
Product name	Design version	Product Version	Package: HP = QFN 3 x 3 x 0.75 Q21 = QFN 2 x 2 x 0.5 (Pb free, RoHS compliant)	Delivery format: 00 = Tested Wafer 05 = Tested Dies 06 = Tape and Reel 09 = Tape

LOCAL DISTRIBUTOR

MICRO ANALOG SYSTEMS OY CONTACTS

Micro Analog Systems Oy
Kutomotie 16
FI-00380 Helsinki, FINLAND

Tel. +358 10 835 1100
Fax +358 10 835 1119
http://www.mas-oy.com

NOTICE
Micro Analog Systems Oy (MAS) reserves the right to make changes to the products contained in this data sheet in order to improve the design or performance and to supply the best possible products. MAS assumes no responsibility for the use of any circuits shown in this data sheet, conveys no license under any patent or other rights unless otherwise specified in this data sheet, and makes no claim that the circuits are free from patent infringement. Applications for any devices shown in this data sheet are for illustration only and MAS makes no claim or warranty that such applications will be suitable for the use specified without further testing or modification.
MAS products are not authorized for use in safety-critical applications (such as life support) where a failure of the MAS product would reasonably be expected to cause severe personal injury or death. Buyers represent that they have all necessary expertise in the safety and regulatory ramifications of their applications, and acknowledge and agree that they are solely responsible for all legal, regulatory and safety-related requirements concerning their products and any use of MAS products in such safety-critical applications, notwithstanding any applications-related information or support that may be provided by MAS. Further, Buyers must fully indemnify MAS and its representatives against any damages arising out of the use of MAS products in such safety-critical applications.
MAS products are neither designed nor intended for use in military/aerospace applications or environments. Buyers acknowledge and agree that any such use of MAS products which MAS has not designated as military-grade is solely at the Buyer's risk, and that they are solely responsible for compliance with all legal and regulatory requirements in connection with such use.
MAS products are neither designed nor intended for use in automotive applications or environments. Buyers acknowledge and agree that, if they use any non-designated products in automotive applications, MAS will not be responsible for any failure to meet such requirements.