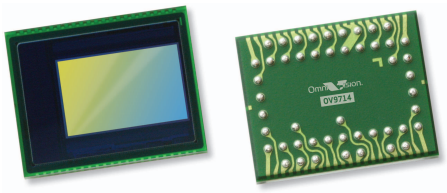

OV9714 720p product brief

Native High Definition OV9714 CameraChip™ With Improved Dynamic Range and 720p/60 Video

lead free

available in a lead-free package

The 1/4-inch OV9714 is a native high-definition (HD) image sensor capable of capturing high quality 720p video at 60 frames per second (fps) or cropped VGA at 120 fps. Built on an enhanced OmniPixel3-HS™ pixel, the OV9714 combines excellent low-light performance of 3300 mV/lux-sec and high dynamic range (HDR) with fast frame rates, making it ideally suited for entertainment, notebook, telepresence and high-end security applications.

The sensor's new and improved OmniPixel3-HS pixel architecture offers better low-light sensitivity, signal to noise ratio (SNR) performance and a 5 dB improvement in dynamic range compared to the previous generation. The OV9714's 12-bit RGB RAW output capability provides optimized HDR, while the embedded sequential line- or frame-based HDR features allow higher dynamic range for high-contrast scenes often encountered indoors.

The OV9714's fast frame rate minimizes latency delay, resulting in quick response time for interactive gaming and real-time communication applications. Additionally, the sensor offers frame synchronization functionality for use in 3D (stereo) camera systems.

The sensor comes with a standard 2-lane MIPI interface and fits into an 8 x 6 x 4.5 mm module size.

Find out more at www.ovt.com.

OmniVision.

OV9714

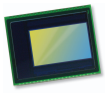

Applications

- PC Multimedia
- Tablets
- Security
- Entertainment
- Cellular and Mobile Phones
- Games

Ordering Information

- **OV09714-A49A**
  (color, lead-free, 49-pin CSP3)

Product Features

- automatic black level calibration (ABLC)
- programmable controls for frame rate, mirror and flip, cropping and windowing
- image quality controls: lens correction and defective pixel canceling
- supports output formats: 8/10/12-bit RAW RGB (MIPI/LVDS)
- supports horizontal and vertical sub-sampling
- supports images sizes: 1280x800, 640x400, 320x200, and 160x100
- fast mode switching
- support 2x2 binning
- standard serial SCCB interface
- two-lane MIPI/LVDS serial output interface
- embedded 256 bits one-time programmable (OTP) memory for part identification, etc.
- on-chip phase lock loop (PLL)
- programmable I/O drive capability
- built-in 1.5V regulator for core
- support alternate frame HDR/line HDR

Product Specifications

- **active array size:** 1296 x 812
- **power supply:**
  - **core:** 1.5 VDC ±5%
  - **analog:** 2.6 - 3.0V
  - **I/O:** 1.7 - 3.0V
- **power requirements:**
  - **active:** 95 mA
  - **standby:** 30 µA
  - **xshutdown:** 5 µA
- **temperature range:**
  - **operating:** -30°C to 85°C junction temperature
  - **stable image:** 0°C to 50°C junction temperature
- **output formats:** 12-bit RGB RAW
- **lens size:** 1/4"
- **lens chief ray angle:** 28.7° non-linear
- **input clock frequency:** 6 - 27 MHz
- **max S/N ratio:** 39 dB
- **dynamic range:** 73 dB @ 8x gain
- **maximum image transfer rate:**
  - **1280x800:** 60 fps
  - **640x400:** 120 fps
  - **320x200:** 240 fps
- **sensitivity:** 3300 mV/lux-sec
- **scan mode:** progressive
- **maximum exposure interval:** 800 x t_{ROW}
- **pixel size:** 3.0 µm x 3.0 µm
- **dark current:** 2.3 mV/s @ 50°C junction temperature
- **image area:** 3936 µm x 2460 µm
- **package dimensions:** 6110 µm x 4930 µm

Functional Block Diagram

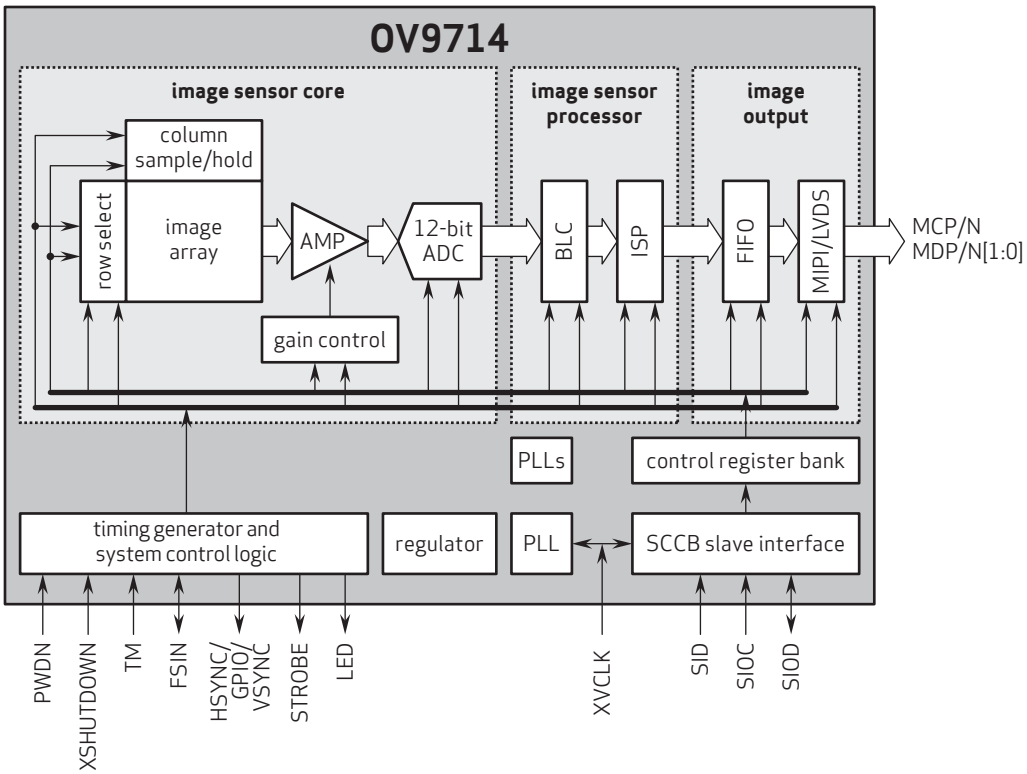

4275 Burton Drive
Santa Clara, CA 95054
USA

Tel: + 1 408 567 3000
Fax: + 1 408 567 3001
www.ovt.com

OmniVision reserves the right to make changes to their products or to discontinue any product or service without further notice. OmniVision, the OmniVision logo and OmniPixel are registered trademarks of OmniVision Technologies, Inc. OmniBSI-2 is a trademark of OmniVision Technologies, Inc. All other trademarks are the property of their respective owners.

Version 1.0, March, 2013