Part Number: 0441332000

Status: Active

Overview: microfit_30

Description: 3.00mm (.118") Micro-Fit 3.0 BMI™ Receptacle Housing, Dual Row, Panel Mount, 20 Circuits, PBT Polyester, UL 94V-0

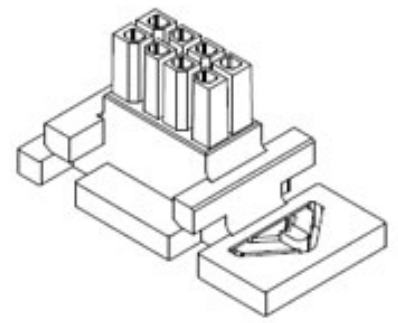

Series

image - Reference only

Documents:

3D Model
Drawing (PDF)
Product Specification PS-44300-001 (PDF)
RoHS Certificate of Compliance (PDF)

Agency Certification

CSA	LR19980
TUV	R72081037
UL	E29179

General

Product Family	Crimp Housings
Series	44133
Overview	microfit_30
Product Literature Order No	USA-106
Product Name	Micro-Fit 3.0 BMI™

Physical

Circuits (maximum)	20
Color - Resin	Black
Flammability	94V-0
Gender	Female
Glow-Wire Compliant	No
Lock to Mating Part	None
Material - Resin	Polyester
Number of Rows	2
Packaging Type	Bag
Panel Mount	Yes
Pitch - Mating Interface (in)	0.118 In
Pitch - Mating Interface (mm)	3.00 mm
Polarized to Mating Part	Yes
Stackable	No
Temperature Range - Operating	-40°C to +105°C

Electrical

Current - Maximum per Contact	5A

Material Info

Reference - Drawing Numbers

Application Specification	AS-44133-001
Packaging Specification	PK-44133-002
Product Specification	PS-44300-001, RPS-44300-001
Sales Drawing	SD-44133-001

EU RoHS
ELV and RoHS Compliant
REACH SVHC
Contains SVHC: No
Halogen-Free Status
Not Halogen-Free

China RoHS

Need more information on product environmental compliance?

Email productcompliance@molex.com
For a multiple part number RoHS Certificate of Compliance, click here

Please visit the Contact Us section for any non-product compliance questions.

Search Parts in this Series
44133Series

Mates With
44300-2000 Panel Mount Plug, 44432 Micro-Fit 3.0 BMI Vertical 20 Circuit Headers, 44428 Micro-Fit 3.0 BMI Right Angle 20 Circuit Headers, 45280 Micro-Fit 3.0 BMI CPI™ Vertical 20 Circuit Headers

Use With
43030 Crimp Terminal

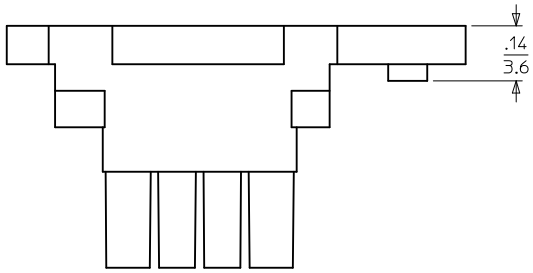

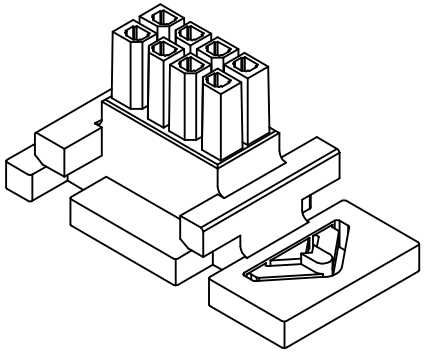

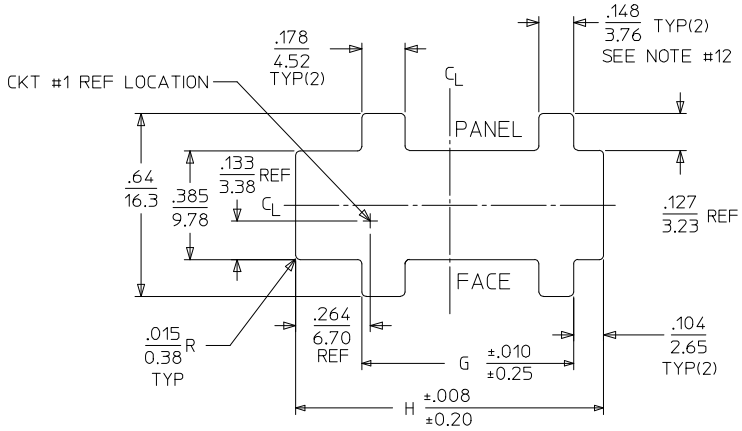

RECOMMENDED PANEL CUT-OUT
(SEE NOTE #7, #9, & #12)

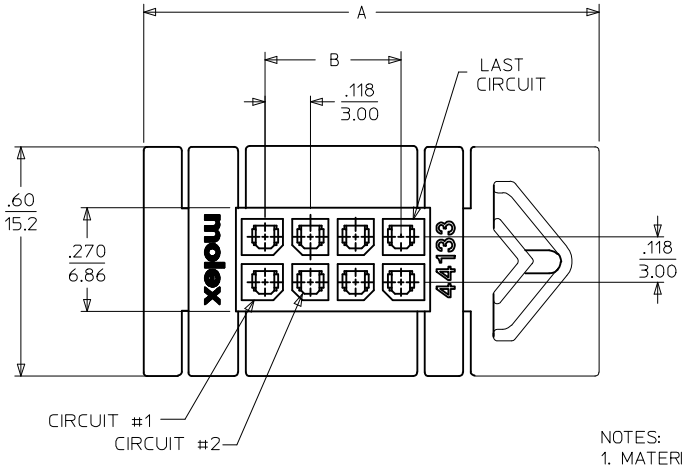

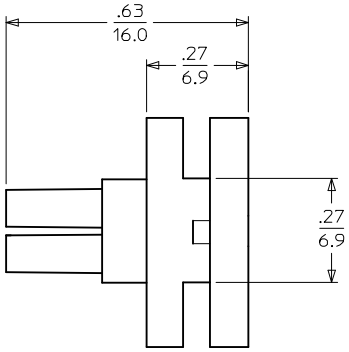

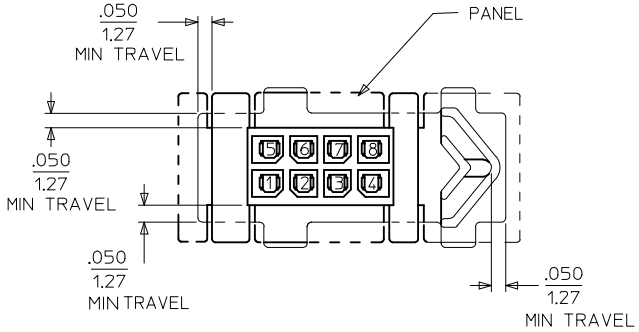

RECEPTACLE SHOWN MOUNTED IN PANEL

NOTES:
1. MATERIAL: UNFILLED POLYESTER (PBT), UL94V-0, COLOR: BLACK
2. FINISH: N/A
3. PRODUCT SPECIFICATION: PS-44300-001
4. PACKAGING SPECIFICATION: TRAY PACKED PER PK-44133-002
5. THIS RECEPTACLE MATES WITH MOLEX BMI PLUG 44300, MOLEX BMI VERTICAL PCB HEADER 44432, MOLEX BMI RIGHT ANGLE PCB HEADER 44428, & MOLEX BMI CPI VERTICAL PCB HEADER 45280. (MOLEX DRAWINGS SD-44300-001, SD-44428-001, SD-44432-001, & SD-45280-001)
6. THIS RECEPTACLE TO BE USED WITH MOLEX FEMALE CRIMP TERMINALS ONLY. (MOLEX DRAWING SD-43030-****) SEE APPLICATION SPECIFICATION AS-44133-001 FOR TERMINAL ORIENTATION IN HOUSING.
7. THIS RECEPTACLE IS DESIGNED FOR USE WITH .062/1.57 MAX. TO .050/1.27 MINIMUM THICK PANELS.
8. DIMENSIONS GIVEN ACROSS CENTERLINES ARE SYMMETRICAL ABOUT THOSE CENTERLINES WITHIN THE TOTAL TOLERANCE.
9. WHEN MATING WITH 44300 SERIES, THE PANEL CUT-OUT CENTERLINES OF DIM "H" AND .385/9.78 MUST ALIGN WITH POINT "M" DEFINED BY MOLEX DRAWING SD-44300-001.
10. MOLEX RECOMMENDS THE USE OF MICRO-FIT TEST PLUG (SERIES 44242) WHENEVER CONTINUITY TESTING IS PERFORMED. TEST PLUGS MUST NOT BE USED TO MAKE OR BREAK UNDER LOAD. MOLEX DOES NOT RECOMMEND USING STANDARD MATING COMPONENTS (SERIES 44428, 44432, 44300 OR 45280) FOR HARNESS TESTING PURPOSES.
11. PART CONFORMS TO CLASS 'B' REQUIREMENTS OF COSMETIC SPECIFICATION PS-45499-002. SOME HOUSINGS MAY HAVE A SMALL GATE BLEMISH NEAR THE GATE LOCATION THAT DOES NOT AFFECT FUNCTIONALITY. HOUSINGS MAY EXHIBIT A SURFACE IMPERFECTION KNOW AS "SINK MARKS" UP TO .024/(0.60) MAX. THIS IS A COSMETIC DEFECT AND DOES NOT EFFECT FUNCTION OF THE CONNECTOR.
12. THE WIDTH OF THE NARROW SLOTS SHOULD BE .114-.129/2.90-3.28 (MIN-MAX) IF KEYING OF THE CONNECTOR TO THE CUT-OUT IS DESIRED.

CKT. SIZE	MATERIAL NUMBER	DIM "A"	DIM "B"	DIM "G"	DIM "H"
04	44133-0400	.97 / 24.6	.118 / 3.00	.530 / 13.46	.870 / 22.10
06	44133-0600	1.09 / 27.7	.236 / 6.00	.648 / 16.46	.988 / 25.10
08	44133-0800	1.21 / 30.7	.354 / 9.00	.766 / 19.46	1.106 / 28.10
10	44133-1000	1.33 / 33.8	.472 / 12.00	.884 / 22.46	1.224 / 31.10
12	44133-1200	1.45 / 36.8	.591 / 15.00	1.002 / 25.46	1.343 / 34.10
14	44133-1400	1.57 / 39.9	.709 / 18.00	1.120 / 28.46	1.461 / 37.10
16	44133-1600	1.69 / 42.9	.827 / 21.00	1.239 / 31.46	1.579 / 40.10
18	44133-1800	1.81 / 46.0	.945 / 24.00	1.357 / 34.46	1.697 / 43.10
20	44133-2000	1.93 / 49.0	1.063 / 27.00	1.475 / 37.46	1.815 / 46.10
22	44133-2200	2.04 / 51.8	1.181 / 30.00	1.593 / 40.46	1.933 / 49.10
24	44133-2400	2.16 / 54.9	1.299 / 33.00	1.711 / 43.46	2.051 / 52.10

COSMETIC SPEC.
EC NO: UCP2009-2841 2009/05/26
DRWN:SSOUSEK 2009/05/28
CHKD:MKIPPER 2009/05/28
APPR:FSMITH
DESCRIPTION
L3
REV

QUALITY SYMBOLS
▼=0
▽C=0

GENERAL TOLERANCES (UNLESS SPECIFIED)

	mm	INCH
4 PLACES	± ---	± ---
3 PLACES	± ---	± .010
2 PLACES	± 0.25	± .014
1 PLACE	± 0.35	± ---
ANGULAR ±1/2°		

DRAFT WHERE APPLICABLE MUST REMAIN WITHIN DIMENSIONS

DIMENSION STYLE: IN/MM
SCALE: ---
DESIGN UNITS: METRIC
THIRD ANGLE PROJECTION

DRAWN BY	SOMMER	DATE 1998/09/30
CHECKED BY	SOMMER	DATE 1998/09/30
APPROVED BY	EDGLEY	DATE 1998/09/30

TITLE
MICRO-FIT (3.0)
BMI FLOATING PANEL
RECEPTACLE, 4-24 CIRCUIT

molex MOLEX INCORPORATED

MATERIAL NO. SEE CHART
DOCUMENT NO. SD-44133-001
SHEET NO. 1 OF 1
SIZE C

THIS DRAWING CONTAINS INFORMATION THAT IS PROPRIETARY TO MOLEX INCORPORATED AND SHOULD NOT BE USED WITHOUT WRITTEN PERMISSION