DS14C88 Quad CMOS Line Driver

Check for Samples: DS14C88

FEATURES

- **Meets EIA-232D and CCITT V.28 Standards**
- **LOW Power Consumption**
- **Wide Power Supply Range: ±5V to ±12V**
- **Available in SOIC Package**

DESCRIPTION

The DS14C88, pin-for-pin compatible to the DS1488/MC1488, is a quad line drivers designed to interface data terminal equipment (DTE) with data circuit-terminating equipment (DCE). This device translates standard TTL/CMOS logic levels to levels conforming to EIA-232-D and CCITT V.28 standards.

The device is fabricated in low threshold CMOS metal gate technology. The device provides very low power consumption compared to its bipolar equivalents: 500 µA (DS14C88) versus 25 mA (DS1488).

The DS14C88 simplifies designs by eliminating the need for external slew rate control capacitors. Slew rate control in accordance with EIA-232D is provided on-chip, eliminating the output capacitors.

Connection Diagram

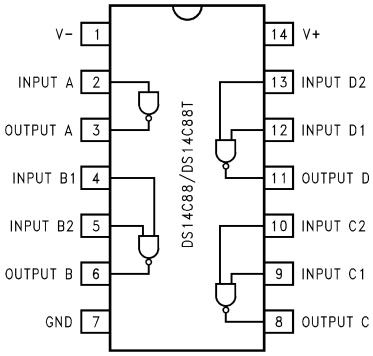

Figure 1. SOIC or PDIP Package- Top View
See Package Number NFF0014A or D0014A

These devices have limited built-in ESD protection. The leads should be shorted together or the device placed in conductive foam during storage or handling to prevent electrostatic damage to the MOS gates.

Please be aware that an important notice concerning availability, standard warranty, and use in critical applications of Texas Instruments semiconductor products and disclaimers thereto appears at the end of this data sheet.

All trademarks are the property of their respective owners.

PRODUCTION DATA information is current as of publication date. Products conform to specifications per the terms of the Texas Instruments standard warranty. Production processing does not necessarily include testing of all parameters.

Copyright © 1998–2013, Texas Instruments Incorporated

Absolute Maximum Ratings[(1)(2)(3)(4)]

Supply Voltage	
V^+ Pin	+13V
V^- Pin	−13V
Driver Input Voltage	(V^+) +0.3V to GND −0.3V
Driver Output Voltage	$\lvert(V^+) - V_O\rvert \le 30V$
	$\lvert(V^-) - V_O\rvert \le 30V$
Continuous Power Dissipation @+25°C[(5)]	
NFF0014A Package	1513 mW
D0014A Package	1063 mW
Junction Temperature	+150°C
Lead Temperature (Soldering 4 seconds)	+260°C
Storage Temperature Range	−65°C to +150°C

(1) "Absolute Maximum Ratings" are those values beyond which the safety of the device cannot be Ensured. They are not meant to imply that the devices should be operated at these limits. The tables of "Electrical Characteristics" specify conditions for device operation.
(2) If Military/Aerospace specified devices are required, please contact the TI Sales Office/ Distributors for availability and specifications.
(3) This Product does not meet 2000V ESD rating.
(4) ESD Rating (HBM, 1.5 kΩ, 100 pF) ≥ 1.0 kV.
(5) Derate NFF0014A Package 12.1 mW/°C, and D0014A Package 8.5 mW/°C above +25°C.

Recommended Operating Conditions

	Min	Max	Units
V^+ Supply (GND = 0V)	+4.5	+12.6	V
V^- Supply (GND = 0V)	−4.5	−12.6	V
Operating Free Air Temp. (T_A) DS14C88	0	+75	°C

Electrical Characteristics

Over Recommended Operating Conditions, unless otherwise specified

Parameter		Test Conditions		Min	Typ	Max	Units
I_{IL}	Maximum Low Input Current	V_{IN} = GND				+10	μA
I_{IH}	Maximum High Input Current	$V_{IN} = V^+$		−10			μA
V_{IL}	Low Level Input Voltage	$V^+ \ge +7V$, $V^- \le -7V$		GND		0.8	V
		$V^+ < +7V$, $V^- > -7V$		GND		0.6	V
V_{IH}	High Level Input Voltage			2.0		V^+	V
V_{OL}	Low Level Output Level	$V_{IN} = V_{IH}$ R_L = 3 kΩ or 7 kΩ	$V^+ = 4.5V$, $V^- = -4.5V$		−4.0	−3.0	V
			$V^+ = 9V$, $V^- = 9V$		−8.0	−6.5	V
			$V^+ = 12V$, $V^- = -12V$		−10.5	−9.0	V
V_{OH}	High Level Output Level	$V_{IN} = V_{IL}$ R_L = 3 kΩ or 7 kΩ	$V^+ = 4.5V$, $V^- = -4.5V$	3.0	4.0		V
			$V^+ = 9V$, $V^- = -9V$	6.5	8.0		V
			$V^+ = 12V$, $V^- = -12V$	9.0	10.5		V
I_{OS+}	High Level Output Short Circuit Current[(1)]	V_{IN} = 0.8V, V_O = GND	$V^+ = +12V$, $V^- = -12V$	−45			mA
I_{OS-}	Low Level Output Short Circuit Current[(1)]	V_{IN} = 2.0V, V_O = GND				+45	mA
R_{OUT}	Output Resistance	$V^+ = V^- = GND = 0V$ $-2V \le V_O \le +2V$[(2)] (Figure 2)		300			Ω

(1) I_{OS+} and I_{OS-} values are for one output at a time. If more than one output is shorted simultaneously, the device dissipation may be exceeded.
(2) Power supply (V^+, V^-) and GND pins are connected to ground for the Output Resistance Test (R_O).

Copyright © 1998–2013, Texas Instruments Incorporated

Electrical Characteristics (continued)

Over Recommended Operating Conditions, unless otherwise specified

Parameter		Test Conditions		Min	Typ	Max	Units
I_{CC+}	Positive Supply Current	$V_{IN} = V_{ILmax}$ R_L = OPEN	V^+ = 4.5V, V^- = −4.5V			10	µA
			V^+ = 9V, V^- = −9V			30	µA
			V^+ = 12V, V^- = −12V			60	µA
		$V_{IN} = V_{IHmin}$ R_L = OPEN	V^+ = 4.5V, V^- = −4.5V			50	µA
			V^+ = 9V, V^- = −9V			300	µA
			V^+ = 12V, V^- = −12V			500	µA
I_{CC-}	Negative Supply Current	$V_{IN} = V_{ILmax}$ R_L = OPEN	V^+ = 4.5V, V^- = −4.5V			−10	µA
			V^+ = 9V, V^- = −9V			−10	µA
			V^+ = 12V, V^- = −12V			−10	µA
		$V_{IN} = V_{IHmin}$ R_L = OPEN	V^+ = 4.5V, V^- = −4.5V			−30	µA
			V^+ = 9V, V^- = −9V			−30	µA
			V^+ = 12V, V^- = −12V			−60	µA

Switching Characteristics[(1)(2)]

Over Recommended Operating Conditions, unless otheriwse specified (Figure 3, Figure 4)

Parameter		Test Conditions	Min	Typ	Max	Units
t_{PLH}	Propagation Delay Low to High	V^+ = +4.5V, V^- = −4.5V		1.5	6.0	µs
		V^+ = +9.0V, V^- = −9.0V		1.2	5.0	µs
		V^+ = +12V, V^- = −12V		1.2	4.0	µs
t_{PHL}	Propagation Delay High to Low	V^+ = +4.5V, V^- = −4.5V		1.5	6.0	µs
		V^+ = +9.0V, V^- = −9.0V		1.35	5.0	µs
		V^+ = +12V, V^- = −12V		1.3	4.0	µs
t_r	Rise Time[(3)]		0.2	1.0		µs
t_f	Fall Time[(3)]		0.2	1.0		µs
tsk	Typical Propagation Delay Skew	V^+ = +4.5V, V^- = −4.5V		250		ns
		V^+ = +9.0V, V^- = −9.0V		200		ns
		V^+ = +12V, V^- = −12V		150		ns
S_R	Output Slew Rate[(3)]	R_L = 3 kΩ to 7 kΩ C_L = 15 pF to 2500 pF			30	V/µs

(1) AC input test waveforms for test purposes: $t_r = t_f \leq 20$ ns, V_{IH} = 2V, V_{IL} = 0.8V (0.6V at V^+ = 4.5V, V^- = −4.5V)
(2) Input rise and rall times must not exceed 5 µs.
(3) The output slew rate, rise time, and fall time are measured from the +3.0V to the −3.0V level on the output waveform.

Copyright © 1998–2013, Texas Instruments Incorporated

Parameter Measure Information

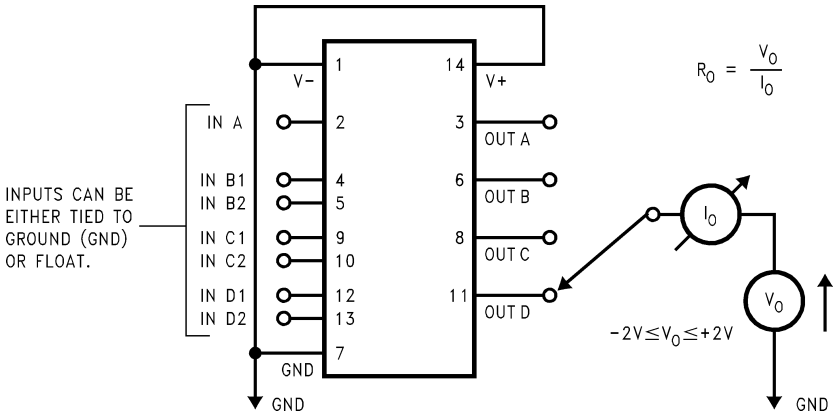

Figure 2. Output Resistance Test Circuit (Power-Off)

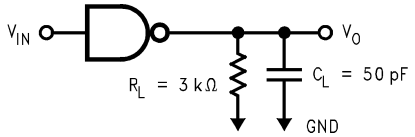

Figure 3. Driver Load Circuit(4)

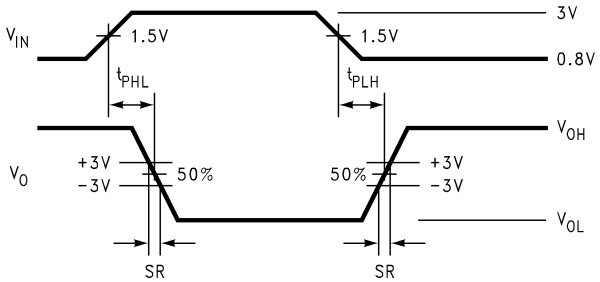

Figure 4. Driver Switching Waveform

(4) C_L include jig and probe capacitances.

TYPICAL APPLICATION INFORMATION

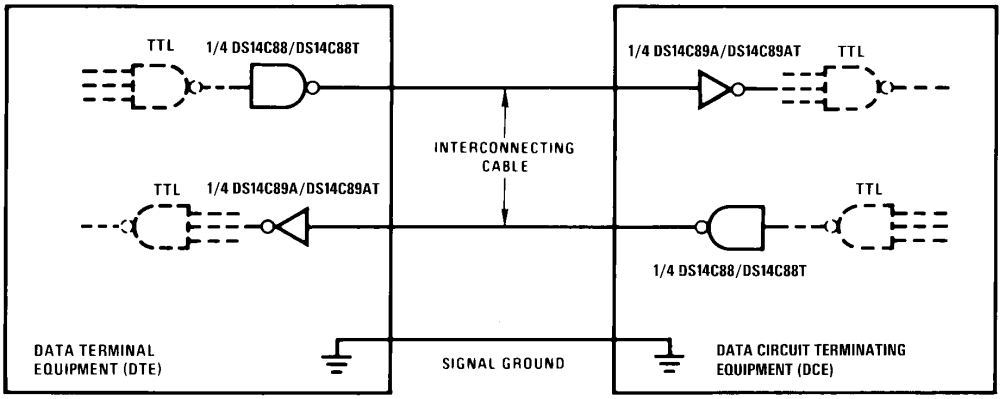

Figure 5. EIA-232D Data Transmission

Copyright © 1998–2013, Texas Instruments Incorporated

REVISION HISTORY

Changes from Revision B (April 2013) to Revision C	Page
• Changed layout of National Data Sheet to TI format	4

PACKAGING INFORMATION

Orderable Device	Status (1)	Package Type	Package Drawing	Pins	Package Qty	Eco Plan (2)	Lead/Ball Finish (6)	MSL Peak Temp (3)	Op Temp (°C)	Device Marking (4/5)	Samples
DS14C88M	LIFEBUY	SOIC	D	14	55	TBD	Call TI	Call TI	0 to 70	DS14C88M	
DS14C88M/NOPB	ACTIVE	SOIC	D	14	55	Green (RoHS & no Sb/Br)	CU SN	Level-1-260C-UNLIM	0 to 70	DS14C88M	Samples
DS14C88MX	LIFEBUY	SOIC	D	14	2500	TBD	Call TI	Call TI	0 to 70	DS14C88M	
DS14C88MX/NOPB	ACTIVE	SOIC	D	14	2500	Green (RoHS & no Sb/Br)	CU SN	Level-1-260C-UNLIM	0 to 70	DS14C88M	Samples
DS14C88N/NOPB	ACTIVE	PDIP	NFF	14	25	Green (RoHS & no Sb/Br)	CU SN	Level-1-NA-UNLIM	0 to 70	DS14C88N	Samples

(1) The marketing status values are defined as follows:
ACTIVE: Product device recommended for new designs.
LIFEBUY: TI has announced that the device will be discontinued, and a lifetime-buy period is in effect.
NRND: Not recommended for new designs. Device is in production to support existing customers, but TI does not recommend using this part in a new design.
PREVIEW: Device has been announced but is not in production. Samples may or may not be available.
OBSOLETE: TI has discontinued the production of the device.

(2) Eco Plan - The planned eco-friendly classification: Pb-Free (RoHS), Pb-Free (RoHS Exempt), or Green (RoHS & no Sb/Br) - please check http://www.ti.com/productcontent for the latest availability information and additional product content details.
TBD: The Pb-Free/Green conversion plan has not been defined.
Pb-Free (RoHS): TI's terms "Lead-Free" or "Pb-Free" mean semiconductor products that are compatible with the current RoHS requirements for all 6 substances, including the requirement that lead not exceed 0.1% by weight in homogeneous materials. Where designed to be soldered at high temperatures, TI Pb-Free products are suitable for use in specified lead-free processes.
Pb-Free (RoHS Exempt): This component has a RoHS exemption for either 1) lead-based flip-chip solder bumps used between the die and package, or 2) lead-based die adhesive used between the die and leadframe. The component is otherwise considered Pb-Free (RoHS compatible) as defined above.
Green (RoHS & no Sb/Br): TI defines "Green" to mean Pb-Free (RoHS compatible), and free of Bromine (Br) and Antimony (Sb) based flame retardants (Br or Sb do not exceed 0.1% by weight in homogeneous material)

(3) MSL, Peak Temp. - The Moisture Sensitivity Level rating according to the JEDEC industry standard classifications, and peak solder temperature.

(4) There may be additional marking, which relates to the logo, the lot trace code information, or the environmental category on the device.

(5) Multiple Device Markings will be inside parentheses. Only one Device Marking contained in parentheses and separated by a "~" will appear on a device. If a line is indented then it is a continuation of the previous line and the two combined represent the entire Device Marking for that device.

(6) Lead/Ball Finish - Orderable Devices may have multiple material finish options. Finish options are separated by a vertical ruled line. Lead/Ball Finish values may wrap to two lines if the finish value exceeds the maximum column width.

Important Information and Disclaimer: The information provided on this page represents TI's knowledge and belief as of the date that it is provided. TI bases its knowledge and belief on information provided by third parties, and makes no representation or warranty as to the accuracy of such information. Efforts are underway to better integrate information from third parties. TI has taken and continues to take reasonable steps to provide representative and accurate information but may not have conducted destructive testing or chemical analysis on incoming materials and chemicals. TI and TI suppliers consider certain information to be proprietary, and thus CAS numbers and other limited information may not be available for release.

In no event shall TI's liability arising out of such information exceed the total purchase price of the TI part(s) at issue in this document sold by TI to Customer on an annual basis.

TAPE AND REEL INFORMATION

REEL DIMENSIONS

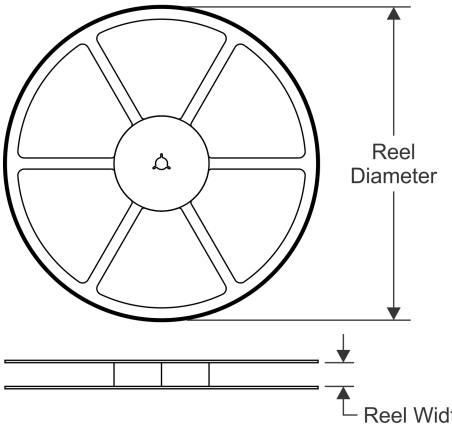

TAPE DIMENSIONS

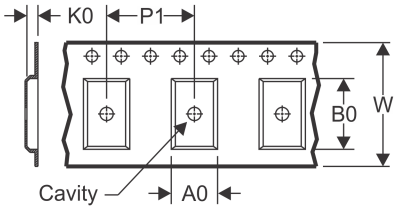

A0	Dimension designed to accommodate the component width
B0	Dimension designed to accommodate the component length
K0	Dimension designed to accommodate the component thickness
W	Overall width of the carrier tape
P1	Pitch between successive cavity centers

QUADRANT ASSIGNMENTS FOR PIN 1 ORIENTATION IN TAPE

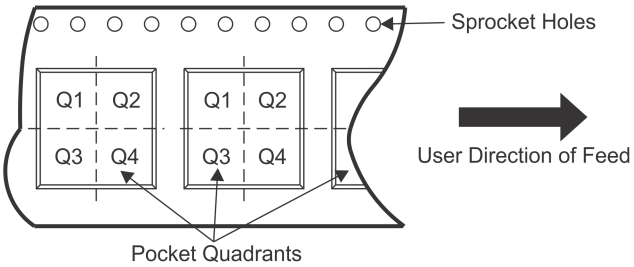

*All dimensions are nominal

Device	Package Type	Package Drawing	Pins	SPQ	Reel Diameter (mm)	Reel Width W1 (mm)	A0 (mm)	B0 (mm)	K0 (mm)	P1 (mm)	W (mm)	Pin1 Quadrant
DS14C88MX	SOIC	D	14	2500	330.0	16.4	6.5	9.35	2.3	8.0	16.0	Q1
DS14C88MX/NOPB	SOIC	D	14	2500	330.0	16.4	6.5	9.35	2.3	8.0	16.0	Q1

TAPE AND REEL BOX DIMENSIONS

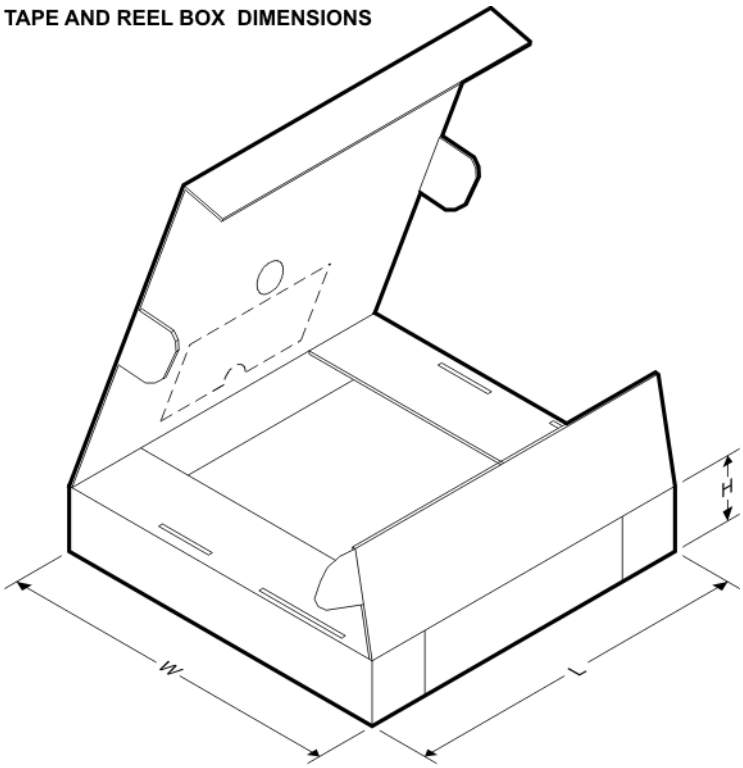

*All dimensions are nominal

Device	Package Type	Package Drawing	Pins	SPQ	Length (mm)	Width (mm)	Height (mm)
DS14C88MX	SOIC	D	14	2500	367.0	367.0	35.0
DS14C88MX/NOPB	SOIC	D	14	2500	367.0	367.0	35.0

NFF0014A

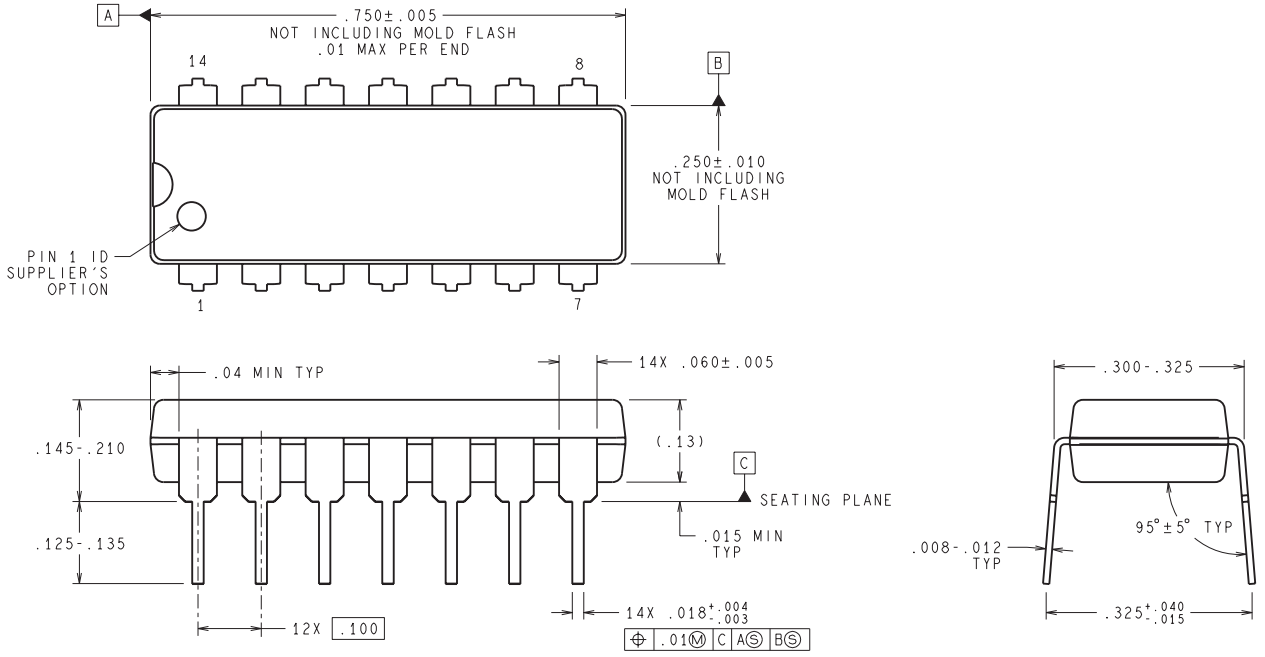

DIMENSIONS ARE IN INCHES
DIMENSIONS IN ( ) FOR REFERENCE ONLY

N14A (Rev G)

D (R–PDSO–G14) PLASTIC SMALL OUTLINE

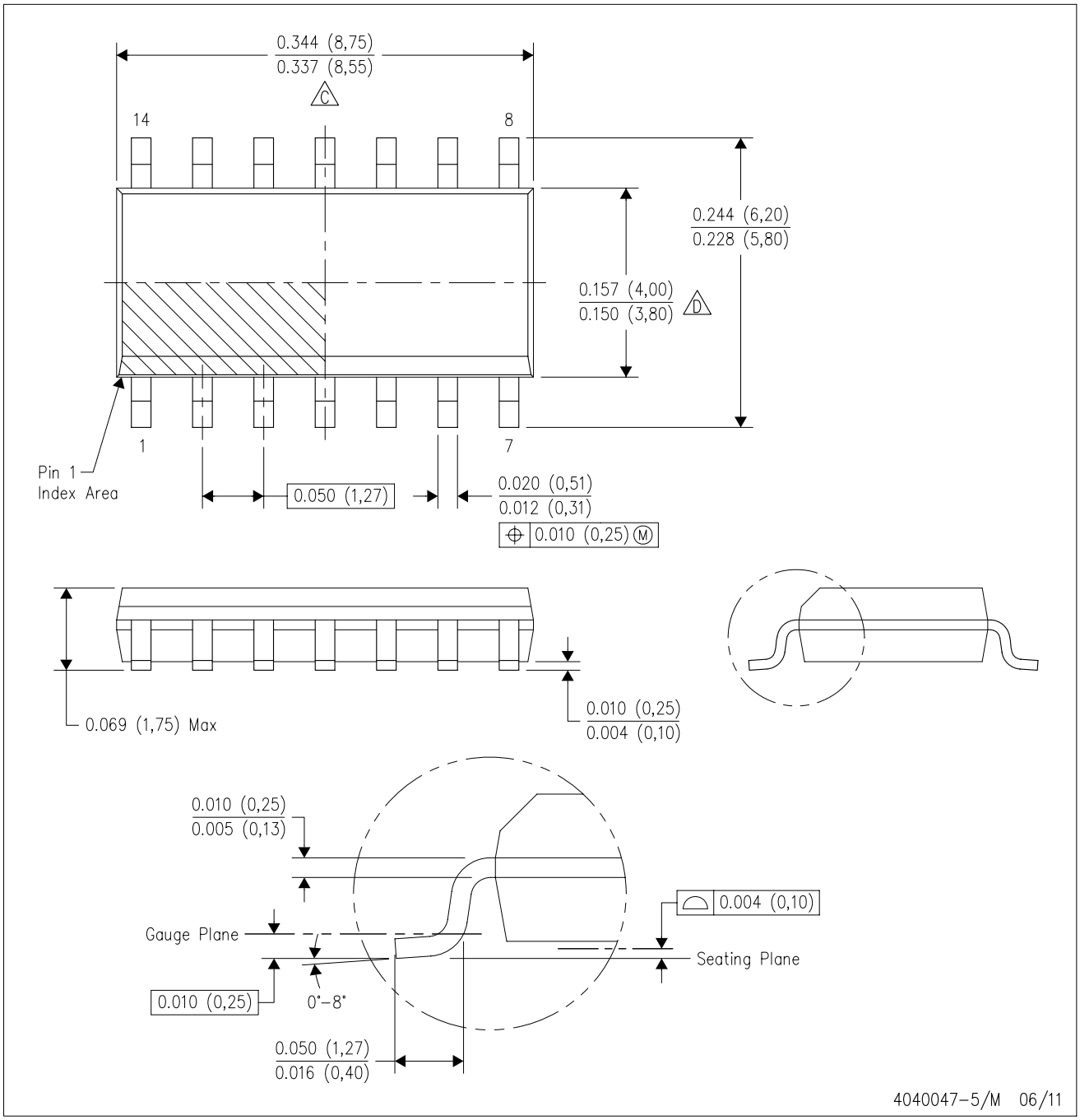

NOTES:
A. All linear dimensions are in inches (millimeters).
B. This drawing is subject to change without notice.
C. Body length does not include mold flash, protrusions, or gate burrs. Mold flash, protrusions, or gate burrs shall not exceed 0.006 (0,15) each side.
D. Body width does not include interlead flash. Interlead flash shall not exceed 0.017 (0,43) each side.
E. Reference JEDEC MS–012 variation AB.

IMPORTANT NOTICE

Texas Instruments Incorporated and its subsidiaries (TI) reserve the right to make corrections, enhancements, improvements and other changes to its semiconductor products and services per JESD46, latest issue, and to discontinue any product or service per JESD48, latest issue. Buyers should obtain the latest relevant information before placing orders and should verify that such information is current and complete. All semiconductor products (also referred to herein as “components”) are sold subject to TI’s terms and conditions of sale supplied at the time of order acknowledgment.

TI warrants performance of its components to the specifications applicable at the time of sale, in accordance with the warranty in TI’s terms and conditions of sale of semiconductor products. Testing and other quality control techniques are used to the extent TI deems necessary to support this warranty. Except where mandated by applicable law, testing of all parameters of each component is not necessarily performed.

TI assumes no liability for applications assistance or the design of Buyers’ products. Buyers are responsible for their products and applications using TI components. To minimize the risks associated with Buyers’ products and applications, Buyers should provide adequate design and operating safeguards.

TI does not warrant or represent that any license, either express or implied, is granted under any patent right, copyright, mask work right, or other intellectual property right relating to any combination, machine, or process in which TI components or services are used. Information published by TI regarding third-party products or services does not constitute a license to use such products or services or a warranty or endorsement thereof. Use of such information may require a license from a third party under the patents or other intellectual property of the third party, or a license from TI under the patents or other intellectual property of TI.

Reproduction of significant portions of TI information in TI data books or data sheets is permissible only if reproduction is without alteration and is accompanied by all associated warranties, conditions, limitations, and notices. TI is not responsible or liable for such altered documentation. Information of third parties may be subject to additional restrictions.

Resale of TI components or services with statements different from or beyond the parameters stated by TI for that component or service voids all express and any implied warranties for the associated TI component or service and is an unfair and deceptive business practice. TI is not responsible or liable for any such statements.

Buyer acknowledges and agrees that it is solely responsible for compliance with all legal, regulatory and safety-related requirements concerning its products, and any use of TI components in its applications, notwithstanding any applications-related information or support that may be provided by TI. Buyer represents and agrees that it has all the necessary expertise to create and implement safeguards which anticipate dangerous consequences of failures, monitor failures and their consequences, lessen the likelihood of failures that might cause harm and take appropriate remedial actions. Buyer will fully indemnify TI and its representatives against any damages arising out of the use of any TI components in safety-critical applications.

In some cases, TI components may be promoted specifically to facilitate safety-related applications. With such components, TI’s goal is to help enable customers to design and create their own end-product solutions that meet applicable functional safety standards and requirements. Nonetheless, such components are subject to these terms.

No TI components are authorized for use in FDA Class III (or similar life-critical medical equipment) unless authorized officers of the parties have executed a special agreement specifically governing such use.

Only those TI components which TI has specifically designated as military grade or “enhanced plastic” are designed and intended for use in military/aerospace applications or environments. Buyer acknowledges and agrees that any military or aerospace use of TI components which have ***not*** been so designated is solely at the Buyer's risk, and that Buyer is solely responsible for compliance with all legal and regulatory requirements in connection with such use.

TI has specifically designated certain components as meeting ISO/TS16949 requirements, mainly for automotive use. In any case of use of non-designated products, TI will not be responsible for any failure to meet ISO/TS16949.

Products		**Applications**	
Audio	www.ti.com/audio	Automotive and Transportation	www.ti.com/automotive
Amplifiers	amplifier.ti.com	Communications and Telecom	www.ti.com/communications
Data Converters	dataconverter.ti.com	Computers and Peripherals	www.ti.com/computers
DLP® Products	www.dlp.com	Consumer Electronics	www.ti.com/consumer-apps
DSP	dsp.ti.com	Energy and Lighting	www.ti.com/energy
Clocks and Timers	www.ti.com/clocks	Industrial	www.ti.com/industrial
Interface	interface.ti.com	Medical	www.ti.com/medical
Logic	logic.ti.com	Security	www.ti.com/security
Power Mgmt	power.ti.com	Space, Avionics and Defense	www.ti.com/space-avionics-defense
Microcontrollers	microcontroller.ti.com	Video and Imaging	www.ti.com/video
RFID	www.ti-rfid.com		
OMAP Applications Processors	www.ti.com/omap	**TI E2E Community**	e2e.ti.com
Wireless Connectivity	www.ti.com/wirelessconnectivity		

Mailing Address: Texas Instruments, Post Office Box 655303, Dallas, Texas 75265
Copyright © 2015, Texas Instruments Incorporated