THIS DRAWING IS UNPUBLISHED. RELEASED FOR PUBLICATION -,- .
© COPYRIGHT - By - ALL RIGHTS RESERVED.

DIN 46247

LOC	DIST
A1	—

REVISIONS

P	LTR	DESCRIPTION	DATE	DWN	APVD
E97-9621		F3	REVISED PER ECO-11-005150	21MAR11	RK	HMR

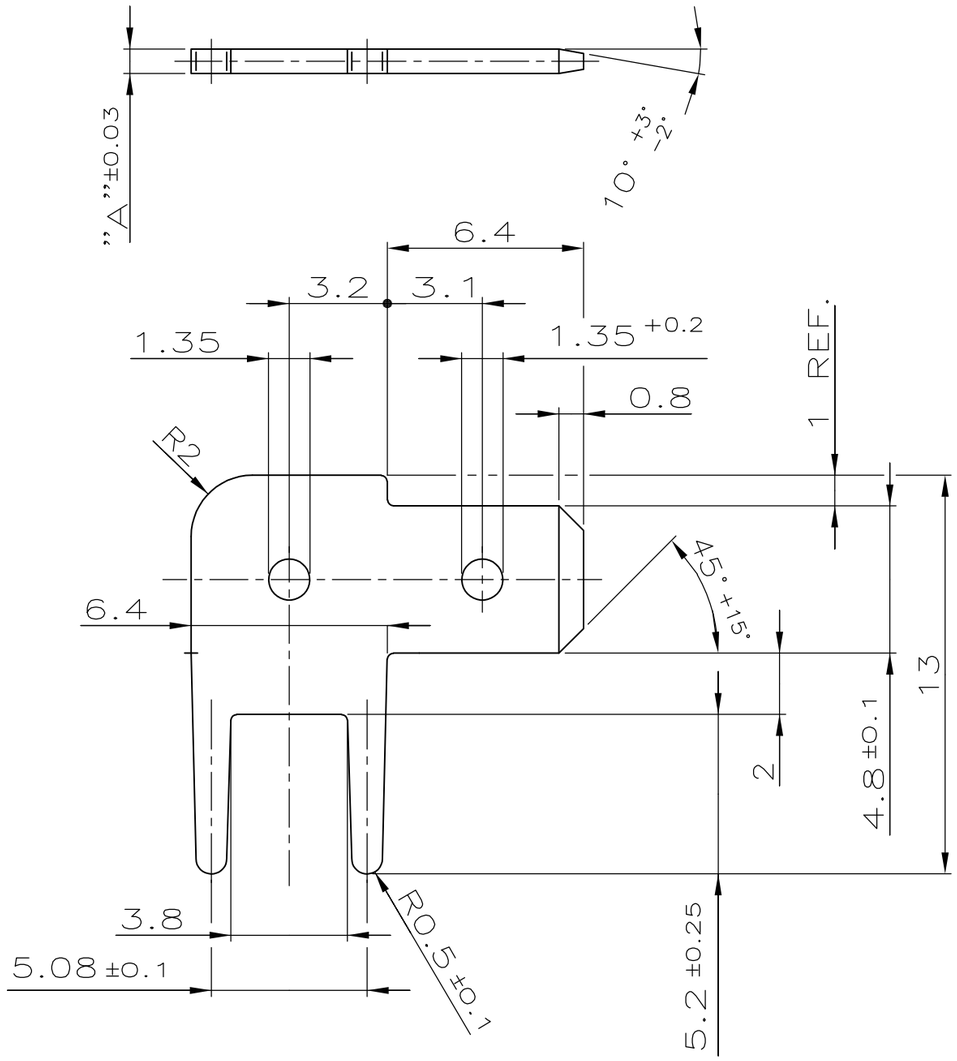

1. MIN. 4.5 µm Sn OVER MIN. 2.5 µm Cu
2. MIN. 3µm Sn OVER MIN. 0.8µm Ni
3. PACKING: MAX. 3000 PIECES PACKED INTO CARDBOARD BOX
4. RECOMMENDED DIA. FOR PCB: Ø1.4 -0.1
5. OBSOLETE PARTS: OBSOLETE CIS STREAMLINING PER D.RENAUD/D.SINISI

1. MIN. 4.5 µm Sn ÜBER MIN. 2.5 µm Cu
2. MIN. 3µm Sn ÜBER MIN. 0.8µm Ni
3. VERPACKUNG: MAX. 3000 TEILE IN KARTON VERPACKT
4. EMPFOHLENE LEITERPLATTENBOHRUNG: Ø1.4 -0.1

	"A" DIMENSION MASS	ORDER NO. BESTELL-NR.	SURFACE OBERFLAECHE / COLOUR/FARBE	MATERIAL
(5) OBSOLETE	0.8	1-~~726389-4~~	(2)	CuZn
OBSOLETE	0.8	1-~~726389-3~~	MIN. 2 µm Ni	CuZn
	0.8	1-726389-2	(1)	CuZn
(5) OBSOLETE	0.8	1-~~726389-1~~	PLAIN BLANK	CuZn
	0.5	726389-3	MIN. 2 µm Ni	CuZn
	0.5	726389-2	(1)	CuZn
(5) OBSOLETE	0.5	~~726389-1~~	PLAIN BLANK	CuZn

THIS DRAWING IS A CONTROLLED DOCUMENT.

DIMENSIONS: mm

TOLERANCES UNLESS OTHERWISE SPECIFIED:
0 PLC ± -
1 PLC ± 0.2
2 PLC ± -
3 PLC ± -
4 PLC ± -
ANGLES ± -

MATERIAL: SEE TABLE / SIEHE TABELLE

FINISH: SEE TABLE / SIEHE TABELLE

DWN WEITZEL 28-MAY-85
CHK PFEIFER 28-MAY-85
APVD MORITZ 02-JUL-85
PRODUCT SPEC: ACCORDING TO DIN 46244
APPLICATION SPEC: —
WEIGHT: —

TE Connectivity

NAME: FASTON TAB 4.8
FLACHSTECKER 4.8

SIZE	CAGE CODE	DRAWING NO	RESTRICTED TO
A3	00779	C-726389	—

CUSTOMER DRAWING

SCALE 5:1 | SHEET 1 OF 1 | REV F3