APPROVED: _____

DATE: _____ TITLE: _____

Rev	AWO #	Description	Date	Appr
-		RELEASED	12/17/08	
A		REVISED SHAPE & DIM.	7/9/14	AY/LL

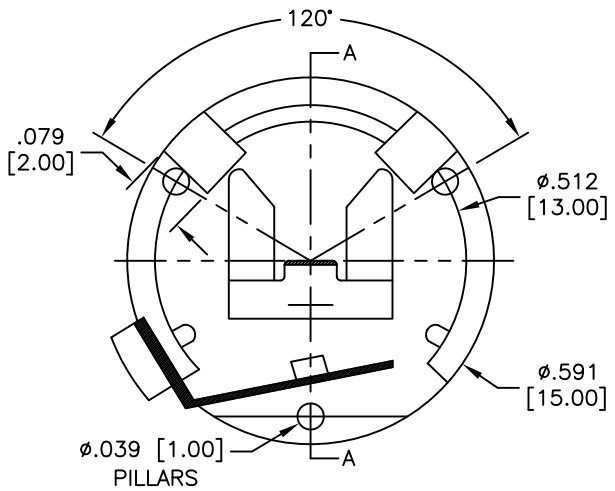

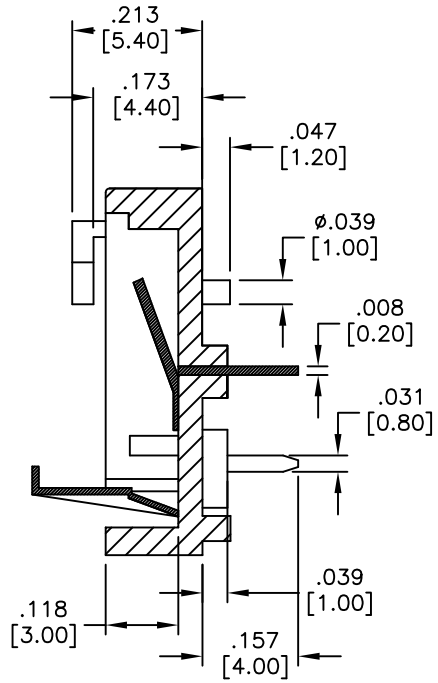

SECTION A–A

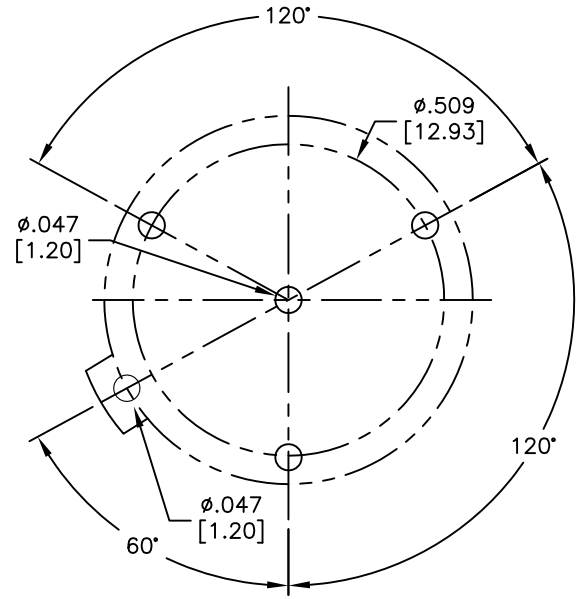

RECOMMENDED PCB LAYOUT

SPECIFICATIONS:
Material:
Insulator: PBT, glass reinforced, rated UL 94V–0
Insulator color: Black
Contacts: Phosphor Bronze
Plating:
Tin over Nickel underplate overall
Electrical:
Current rating: 2A (AC/DC)
Voltage rating: 500V (AC/DC)
Contact resistance: 30 mohms max
Insulation resistance: 500 Mohms min
Temperature Rating:
Operating temperature: –55°C to +85°C
Environmental:
Lead free, RoHS compliant

RoHS COMPLIANT

UNLESS OTHERWISE SPECIFIED
ALL DIMENSIONS ARE INCHES [MM]
TOLERANCES: EXCEPT AS NOTED

INCHES		HOLES	
.X	± .10	Ø.X	±.10
.XX	± .020	Ø.XX	±.015
.XXX	± .015	Ø.XXX	±.010

APPROVALS		DATE
DRAWN	DY	12/17/08
CHECKED		
APPROVED		

ADAM TECH
909 Rahway Avenue, Union, NJ 07083
Phone: 908-687-5000 Fax: 908-687-5710

TITLE: COIN CELL BATTER HOLDER, BR1220 PCB MOUNT

SIZE	PART NO.	REV.
X	BH-41A-1	A

REF: S00021T | SCALE: NTS | SHEET 1 OF 1