NUP4201DR2

ESD Protection Diode

Low Capacitance Surface Mount ESD Protection for High−Speed Data Interfaces

The NUP4201DR2 surge protection is designed to protect equipment attached to high speed communication lines from ESD, EFT, and lightning.

Features

- SO−8 Package
- Peak Power − 500 Watts 8 x 20 μS
- ESD Rating:
  IEC 61000−4−2 (ESD) 15 kV (air) 8 kV (contact)
  IEC 61000−4−4 (EFT) 40 A (5/50 ns)
  IEC 61000−4−5 (lightning) 25 A (8/20 μs)
- UL Flammability Rating of 94 V−0
- Pb−Free Package is Available

Typical Applications

- High Speed Communication Line Protection
- USB Power and Data Line Protection
- Video Line Protection
- Base Stations
- HDSL, IDSL Secondary IC Side Protection
- Microcontroller Input Protection

MAXIMUM RATINGS

Rating	Symbol	Value	Unit
Peak Power Dissipation 8 x 20 μS @ T_A = 25°C (Note 1)	P_{pk}	500	W
Junction and Storage Temperature Range	T_J, T_{stg}	−55 to +150	°C
Lead Solder Temperature − Maximum 10 Seconds Duration	T_L	260	°C

Stresses exceeding those listed in the Maximum Ratings table may damage the device. If any of these limits are exceeded, device functionality should not be assumed, damage may occur and reliability may be affected.

1. Non−repetitive current pulse 8 x 20 μS exponential decay waveform

ON Semiconductor®

www.onsemi.com

SO−8 LOW CAPACITANCE VOLTAGE SUPPRESSOR 500 WATTS PEAK POWER 6 VOLTS

PIN CONFIGURATION AND SCHEMATIC

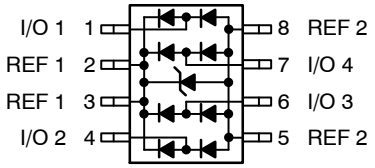

SOIC−8
CASE 751
PLASTIC

MARKING DIAGRAM

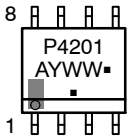

P4201 = Device Code
A = Assembly Location
Y = Year
WW = Work Week
▪ = Pb−Free Package
(Note: Microdot may be in either location)

ORDERING INFORMATION

Device	Package	Shipping†
NUP4201DR2	SO−8	2500/Tape & Reel
NUP4201DR2G	SO−8 (Pb−Free)	2500/Tape & Reel

†For information on tape and reel specifications, including part orientation and tape sizes, please refer to our Tape and Reel Packaging Specification Brochure, BRD8011/D.

© Semiconductor Components Industries, LLC, 2008

October, 2017 − Rev. 7

Publication Order Number:
NUP4201DR2/D

ELECTRICAL CHARACTERISTICS

Characteristic	Symbol	Min	Typ	Max	Unit
Reverse Breakdown Voltage @ I_t = 1.0 mA	V_{BR}	6.0	–	–	V
Reverse Leakage Current @ V_{RWM} = 5.0 Volts	I_R	N/A	–	10	μA
Maximum Clamping Voltage @ I_{PP} = 1.0 A, 8 x 20 μS	V_C	N/A	–	9.8	V
Maximum Clamping Voltage @ I_{PP} = 10 A, 8 x 20 μS	V_C	N/A	–	12	V
Maximum Clamping Voltage @ I_{PP} = 25 A, 8 x 20 μS	V_C	N/A	–	25	V
Between I/O Pins and Ground @ DC Bias = 0 V, 1.0 MHz	Capacitance	–	5.0	10	pF
Between I/O Pins and I/O @ DC Bias = 0 V, 1.0 MHz	Capacitance	–	2.5	5.0	pF

ELECTRICAL CHARACTERISTICS

(T_A = 25°C unless otherwise noted)

UNIDIRECTIONAL (Circuit tied to Pins 1 and 3 or 2 and 3)

Symbol	Parameter
I_{PP}	Maximum Reverse Peak Pulse Current
V_C	Clamping Voltage @ I_{PP}
V_{RWM}	Working Peak Reverse Voltage
I_R	Maximum Reverse Leakage Current @ V_{RWM}
V_{BR}	Breakdown Voltage @ I_T
I_T	Test Current
ΘV_{BR}	Maximum Temperature Coefficient of V_{BR}
I_F	Forward Current
V_F	Forward Voltage @ I_F
Z_{ZT}	Maximum Zener Impedance @ I_{ZT}
I_{ZK}	Reverse Current
Z_{ZK}	Maximum Zener Impedance @ I_{ZK}

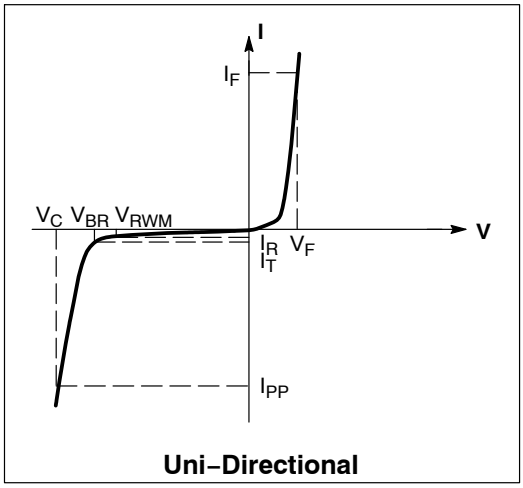

TYPICAL CHARACTERISTICS

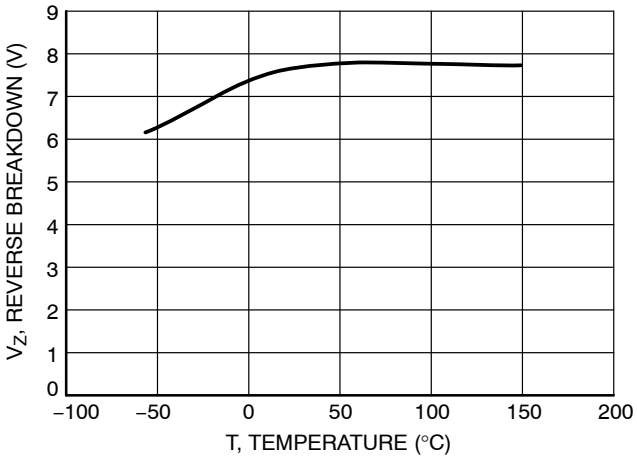

Figure 1. Reverse Breakdown versus Temperature

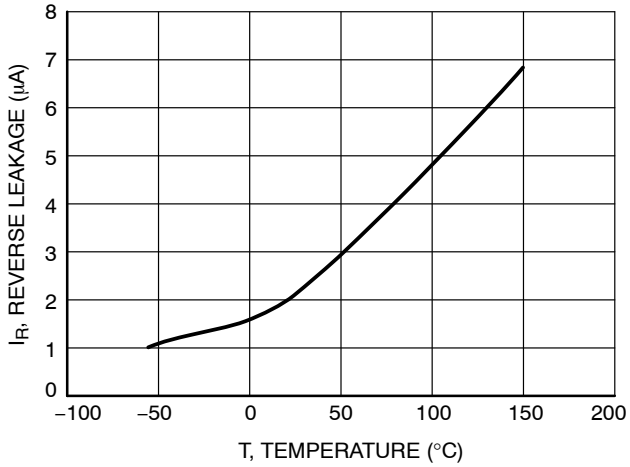

Figure 2. Reverse Leakage versus Temperature

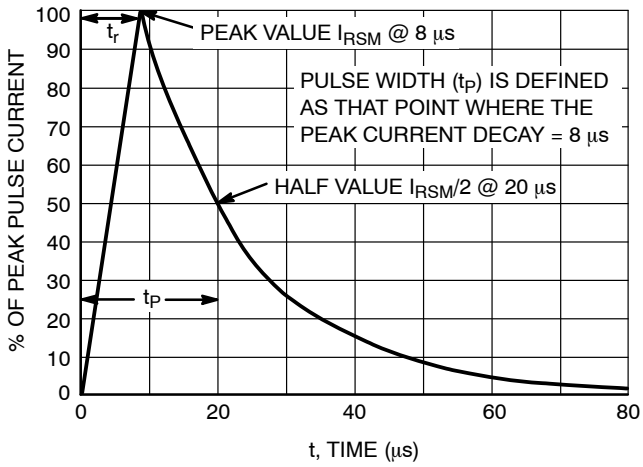

Figure 3. 8 x 20 μs Pulse Waveform

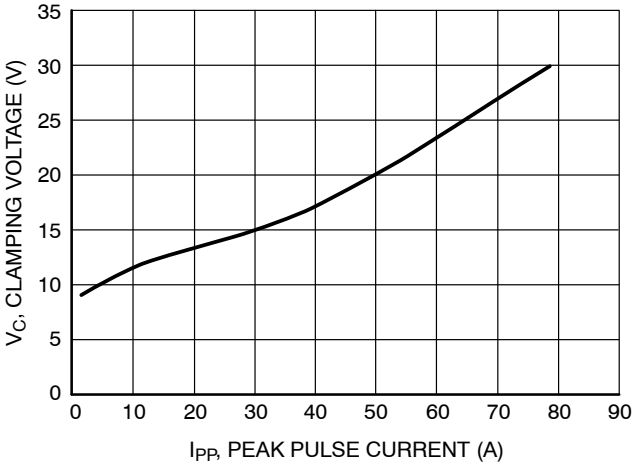

Figure 4. Clamping Voltage versus Peak Pulse Current

APPLICATIONS INFORMATION

The new NUP4201DR2 is a low capacitance rurge protection diode array designed to protect sensitive electronics such as communications systems, computers, and computer peripherals against damage due to ESD events or transient overvoltage voltage conditions. Because of its low capacitance, it can be used in high speed I/O data lines. The integrated design of the NUP4201DR2 offers surge rated, low capacitance steering diodes and a surge protection diode integrated in a single package (SO−8). If a transient condition occurs, the steering diodes will drive the transient to the positive rail of the power supply or to ground. The surge protection device protects the power line against overvoltage conditions to avoid damage to the power supply and any downstream components.

NUP4201DR2 Configuration Options

The NUP4201DR2 is able to protect up to four data lines against transient overvoltage conditions by driving them to a fixed reference point for clamping purposes. The steering diodes will be forward biased whenever the voltage on the protected line exceeds the reference voltage (Vcc+Vf). The diodes will force the transient current to bypass the sensitive circuit.

Data lines are connected at pins 1, 4, 6 and 7. The negative reference is connected at pins 5 and 8. These pins must be connected directly to ground by using a ground plane to minimize the PCB's ground inductance. It is very important to reduce the PCB trace lengths as much as possible to minimize parasitic inductances.

Option 1

Protection of four data lines and the power supply using Vcc as reference.

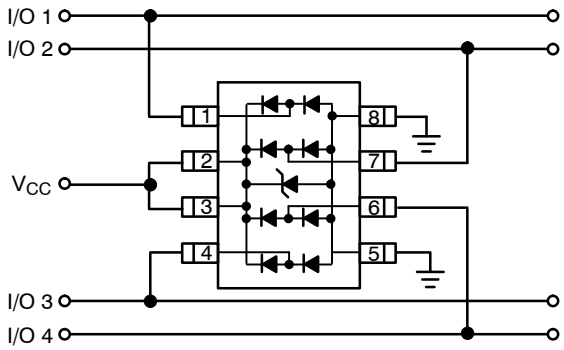

Figure 5.

For this configuration, connect pins 2 and 3 directly to the positive supply rail (Vcc), the data lines are referenced to the supply voltage. The internal surge protection diode prevents overvoltage on the supply rail. Biasing of the steering diodes reduces their capacitance.

Option 2

Protection of four data lines with bias and power supply isolation resistor.

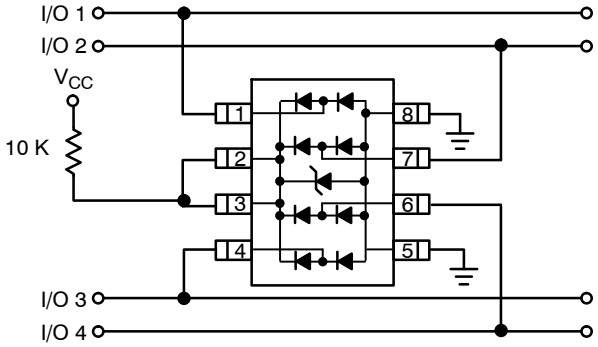

Figure 6.

The NUP4201DR2 can be isolated from the power supply by connecting a series resistor between pins 2 and 3 and Vcc. A 10 kΩ resistor is recommended for this application. This will maintain a bias on the internal surge protection and steering diodes, reducing their capacitance.

Option 3

Protection of four data lines using the internal surge protection diode as reference.

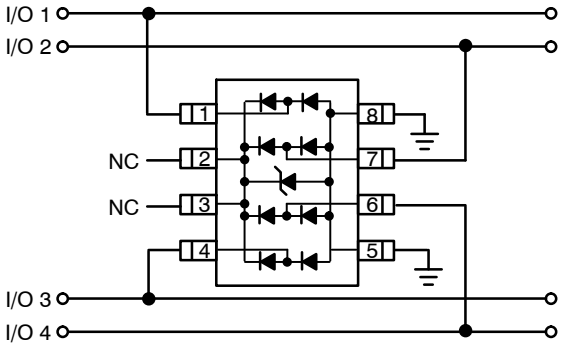

Figure 7.

In applications lacking a positive supply reference or those cases in which a fully isolated power supply is required, the internal surge protection can be used as the reference. For these applications, pins 2 and 3 are not connected. In this configuration, the steering diodes will conduct whenever the voltage on the protected line exceeds the working voltage of the surge protection plus one diode drop (Vc=Vf + V_{RWM}).

ESD Protection of Power Supply Lines

When using diodes for data line protection, referencing to a supply rail provides advantages. Biasing the diodes reduces their capacitance and minimizes signal distortion. Implementing this topology with discrete devices does have disadvantages. This configuration is shown below:

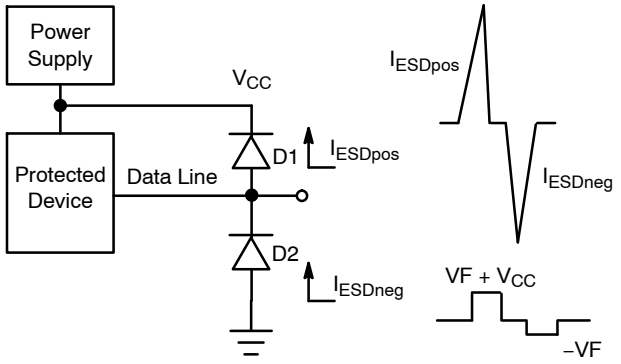

Figure 8.

Looking at the figure above, it can be seen that when a positive ESD condition occurs, diode D1 will be forward biased while diode D2 will be forward biased when a negative ESD condition occurs. For slower transient conditions, this system may be approximated as follows:

For positive pulse conditions:

$Vc = Vcc + Vf_{D1}$

For negative pulse conditions:

$Vc = -Vf_{D2}$

ESD events can have rise times on the order of some number of nanoseconds. Under these conditions, the effect of parasitic inductance must be considered. A pictorial representation of this is shown below.

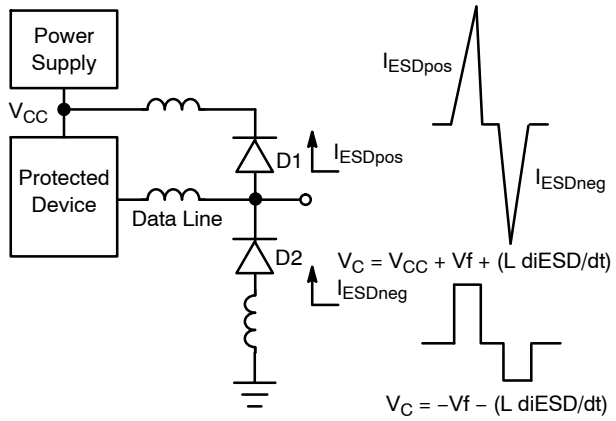

Figure 9.

An approximation of the clamping voltage for these fast transients would be:

For positive pulse conditions:

$Vc = Vcc + Vf + (L\ di_{ESD}/dt)$

For negative pulse conditions:

$Vc = -Vf - (L\ di_{ESD}/dt)$

As shown in the formulas, the clamping voltage (Vc) not only depends on the Vf of the steering diodes but also on the L di_{ESD}/dt factor. A relatively small trace inductance can result in hundreds of volts appearing on the supply rail. This endangers both the power supply and anything attached to that rail. This highlights the importance of good board layout. Taking care to minimize the effects of parasitic inductance will provide significant benefits in transient immunity.

Even with good board layout, some disadvantages are still present when discrete diodes are used to suppress ESD events across datalines and the supply rail. Discrete diodes with good transient power capability will have larger die and therefore higher capacitance. This capacitance becomes problematic as transmission frequencies increase. Reducing capacitance generally requires reducing die size. These small die will have higher forward voltage characteristics at typical ESD transient current levels. This voltage combined with the smaller die can result in device failure.

The ON Semiconductor NUP4201DR2 was developed to overcome the disadvantages encountered when using discrete diodes for ESD protection. This device integrates a surge protection diode within a network of steering diodes.

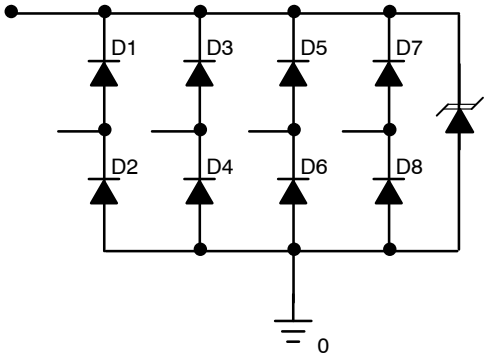

Figure 10. NUP4201DR2 Equivalent Circuit

During an ESD condition, the ESD current will be driven to ground through the surge protection diode as shown below.

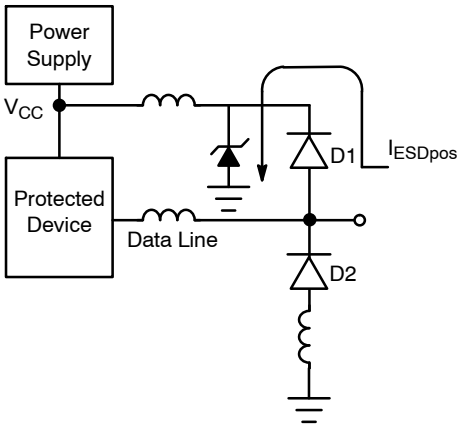

Figure 11.

The resulting clamping voltage on the protected IC will be:

$Vc = V_F + V_{RWM}$.

The clamping voltage of the surge protection diode is provided in Figure 4 and depends on the magnitude of the ESD current. The steering diodes are fast switching devices

with unique forward voltage and low capacitance characteristics.

TYPICAL APPLICATIONS

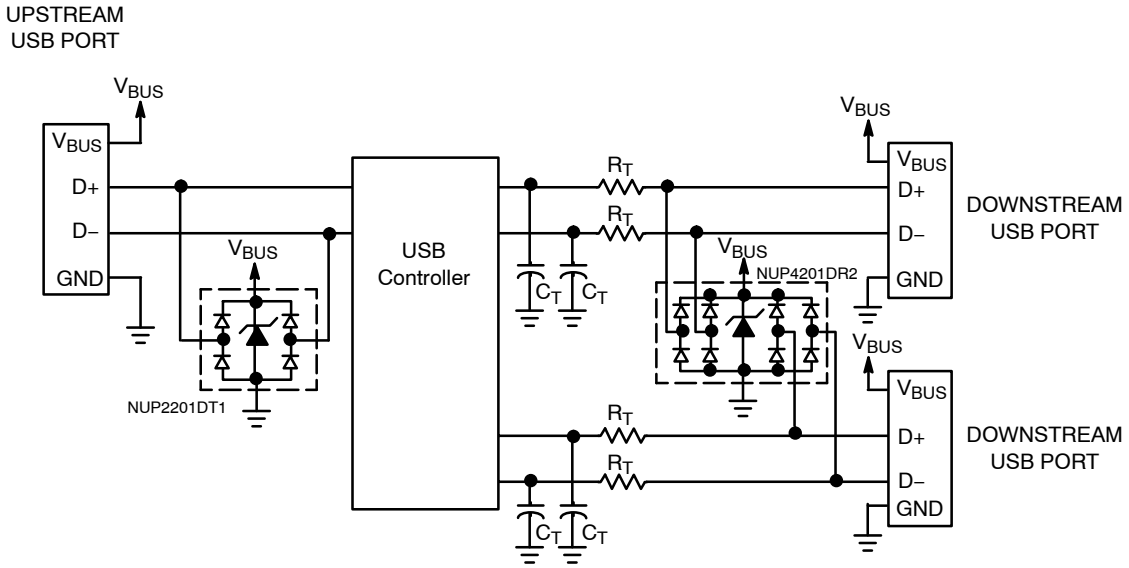

Figure 12. ESD Protection for USB Port

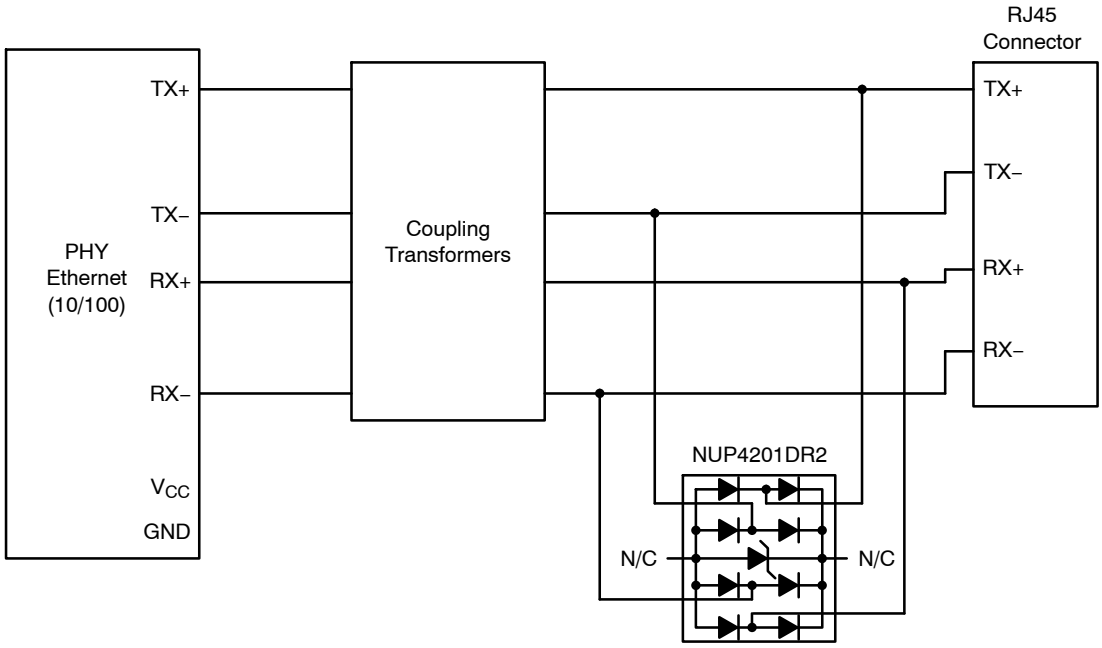

Figure 13. Protection for Ethernet 10/100 (Differential mode)

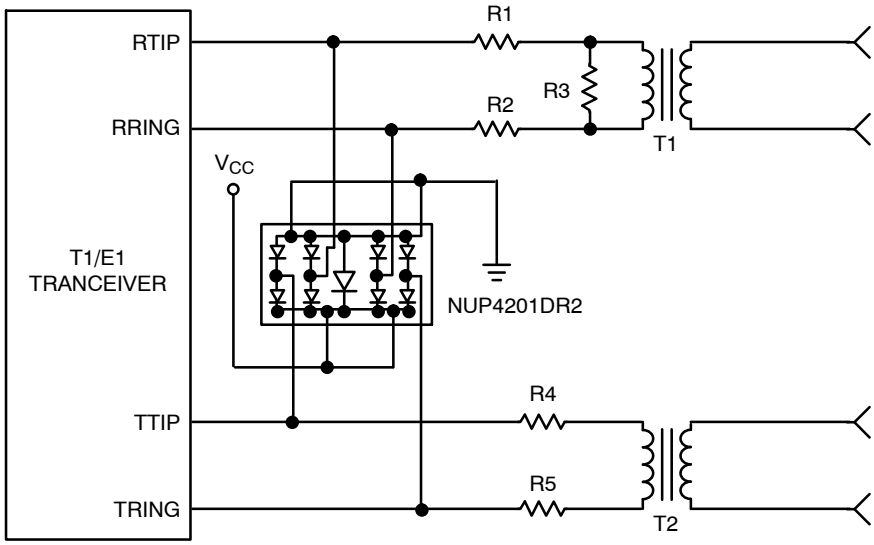

Figure 14. TI/E1 Interface Protection

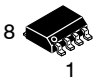

SCALE 1:1

SOIC−8 NB
CASE 751−07
ISSUE AK

DATE 16 FEB 2011

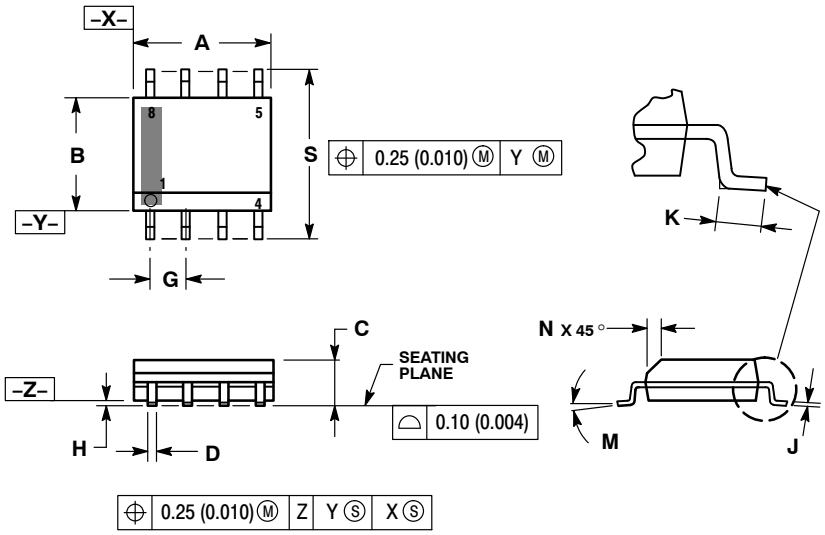

NOTES:
1. DIMENSIONING AND TOLERANCING PER ANSI Y14.5M, 1982.
2. CONTROLLING DIMENSION: MILLIMETER.
3. DIMENSION A AND B DO NOT INCLUDE MOLD PROTRUSION.
4. MAXIMUM MOLD PROTRUSION 0.15 (0.006) PER SIDE.
5. DIMENSION D DOES NOT INCLUDE DAMBAR PROTRUSION. ALLOWABLE DAMBAR PROTRUSION SHALL BE 0.127 (0.005) TOTAL IN EXCESS OF THE D DIMENSION AT MAXIMUM MATERIAL CONDITION.
6. 751−01 THRU 751−06 ARE OBSOLETE. NEW STANDARD IS 751−07.

	MILLIMETERS		INCHES	
DIM	MIN	MAX	MIN	MAX
A	4.80	5.00	0.189	0.197
B	3.80	4.00	0.150	0.157
C	1.35	1.75	0.053	0.069
D	0.33	0.51	0.013	0.020
G	1.27 BSC		0.050 BSC	
H	0.10	0.25	0.004	0.010
J	0.19	0.25	0.007	0.010
K	0.40	1.27	0.016	0.050
M	0 °	8 °	0 °	8 °
N	0.25	0.50	0.010	0.020
S	5.80	6.20	0.228	0.244

SOLDERING FOOTPRINT*

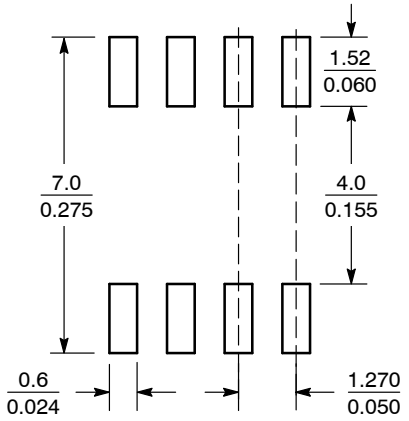

SCALE 6:1 (mm / inches)

*For additional information on our Pb−Free strategy and soldering details, please download the ON Semiconductor Soldering and Mounting Techniques Reference Manual, SOLDERRM/D.

GENERIC MARKING DIAGRAM*

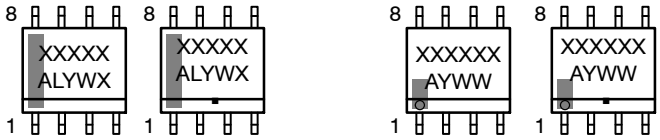

XXXXX = Specific Device Code
A = Assembly Location
L = Wafer Lot
Y = Year
W = Work Week
▪ = Pb−Free Package

XXXXXX = Specific Device Code
A = Assembly Location
Y = Year
WW = Work Week
▪ = Pb−Free Package

*This information is generic. Please refer to device data sheet for actual part marking. Pb−Free indicator, "G" or microdot "▪", may or may not be present. Some products may not follow the Generic Marking.

STYLES ON PAGE 2

ON Semiconductor and ON are trademarks of Semiconductor Components Industries, LLC dba ON Semiconductor or its subsidiaries in the United States and/or other countries. ON Semiconductor reserves the right to make changes without further notice to any products herein. ON Semiconductor makes no warranty, representation or guarantee regarding the suitability of its products for any particular purpose, nor does ON Semiconductor assume any liability arising out of the application or use of any product or circuit, and specifically disclaims any and all liability, including without limitation special, consequential or incidental damages. ON Semiconductor does not convey any license under its patent rights nor the rights of others.

© Semiconductor Components Industries, LLC, 2019

SOIC−8 NB
CASE 751−07
ISSUE AK

DATE 16 FEB 2011

STYLE 1:
PIN 1. EMITTER
2. COLLECTOR
3. COLLECTOR
4. EMITTER
5. EMITTER
6. BASE
7. BASE
8. EMITTER

STYLE 2:
PIN 1. COLLECTOR, DIE, #1
2. COLLECTOR, #1
3. COLLECTOR, #2
4. COLLECTOR, #2
5. BASE, #2
6. EMITTER, #2
7. BASE, #1
8. EMITTER, #1

STYLE 3:
PIN 1. DRAIN, DIE #1
2. DRAIN, #1
3. DRAIN, #2
4. DRAIN, #2
5. GATE, #2
6. SOURCE, #2
7. GATE, #1
8. SOURCE, #1

STYLE 4:
PIN 1. ANODE
2. ANODE
3. ANODE
4. ANODE
5. ANODE
6. ANODE
7. ANODE
8. COMMON CATHODE

STYLE 5:
PIN 1. DRAIN
2. DRAIN
3. DRAIN
4. DRAIN
5. GATE
6. GATE
7. SOURCE
8. SOURCE

STYLE 6:
PIN 1. SOURCE
2. DRAIN
3. DRAIN
4. SOURCE
5. SOURCE
6. GATE
7. GATE
8. SOURCE

STYLE 7:
PIN 1. INPUT
2. EXTERNAL BYPASS
3. THIRD STAGE SOURCE
4. GROUND
5. DRAIN
6. GATE 3
7. SECOND STAGE Vd
8. FIRST STAGE Vd

STYLE 8:
PIN 1. COLLECTOR, DIE #1
2. BASE, #1
3. BASE, #2
4. COLLECTOR, #2
5. COLLECTOR, #2
6. EMITTER, #2
7. EMITTER, #1
8. COLLECTOR, #1

STYLE 9:
PIN 1. EMITTER, COMMON
2. COLLECTOR, DIE #1
3. COLLECTOR, DIE #2
4. EMITTER, COMMON
5. EMITTER, COMMON
6. BASE, DIE #2
7. BASE, DIE #1
8. EMITTER, COMMON

STYLE 10:
PIN 1. GROUND
2. BIAS 1
3. OUTPUT
4. GROUND
5. GROUND
6. BIAS 2
7. INPUT
8. GROUND

STYLE 11:
PIN 1. SOURCE 1
2. GATE 1
3. SOURCE 2
4. GATE 2
5. DRAIN 2
6. DRAIN 2
7. DRAIN 1
8. DRAIN 1

STYLE 12:
PIN 1. SOURCE
2. SOURCE
3. SOURCE
4. GATE
5. DRAIN
6. DRAIN
7. DRAIN
8. DRAIN

STYLE 13:
PIN 1. N.C.
2. SOURCE
3. SOURCE
4. GATE
5. DRAIN
6. DRAIN
7. DRAIN
8. DRAIN

STYLE 14:
PIN 1. N−SOURCE
2. N−GATE
3. P−SOURCE
4. P−GATE
5. P−DRAIN
6. P−DRAIN
7. N−DRAIN
8. N−DRAIN

STYLE 15:
PIN 1. ANODE 1
2. ANODE 1
3. ANODE 1
4. ANODE 1
5. CATHODE, COMMON
6. CATHODE, COMMON
7. CATHODE, COMMON
8. CATHODE, COMMON

STYLE 16:
PIN 1. EMITTER, DIE #1
2. BASE, DIE #1
3. EMITTER, DIE #2
4. BASE, DIE #2
5. COLLECTOR, DIE #2
6. COLLECTOR, DIE #2
7. COLLECTOR, DIE #1
8. COLLECTOR, DIE #1

STYLE 17:
PIN 1. VCC
2. V2OUT
3. V1OUT
4. TXE
5. RXE
6. VEE
7. GND
8. ACC

STYLE 18:
PIN 1. ANODE
2. ANODE
3. SOURCE
4. GATE
5. DRAIN
6. DRAIN
7. CATHODE
8. CATHODE

STYLE 19:
PIN 1. SOURCE 1
2. GATE 1
3. SOURCE 2
4. GATE 2
5. DRAIN 2
6. MIRROR 2
7. DRAIN 1
8. MIRROR 1

STYLE 20:
PIN 1. SOURCE (N)
2. GATE (N)
3. SOURCE (P)
4. GATE (P)
5. DRAIN
6. DRAIN
7. DRAIN
8. DRAIN

STYLE 21:
PIN 1. CATHODE 1
2. CATHODE 2
3. CATHODE 3
4. CATHODE 4
5. CATHODE 5
6. COMMON ANODE
7. COMMON ANODE
8. CATHODE 6

STYLE 22:
PIN 1. I/O LINE 1
2. COMMON CATHODE/VCC
3. COMMON CATHODE/VCC
4. I/O LINE 3
5. COMMON ANODE/GND
6. I/O LINE 4
7. I/O LINE 5
8. COMMON ANODE/GND

STYLE 23:
PIN 1. LINE 1 IN
2. COMMON ANODE/GND
3. COMMON ANODE/GND
4. LINE 2 IN
5. LINE 2 OUT
6. COMMON ANODE/GND
7. COMMON ANODE/GND
8. LINE 1 OUT

STYLE 24:
PIN 1. BASE
2. EMITTER
3. COLLECTOR/ANODE
4. COLLECTOR/ANODE
5. CATHODE
6. CATHODE
7. COLLECTOR/ANODE
8. COLLECTOR/ANODE

STYLE 25:
PIN 1. VIN
2. N/C
3. REXT
4. GND
5. IOUT
6. IOUT
7. IOUT
8. IOUT

STYLE 26:
PIN 1. GND
2. dv/dt
3. ENABLE
4. ILIMIT
5. SOURCE
6. SOURCE
7. SOURCE
8. VCC

STYLE 27:
PIN 1. ILIMIT
2. OVLO
3. UVLO
4. INPUT+
5. SOURCE
6. SOURCE
7. SOURCE
8. DRAIN

STYLE 28:
PIN 1. SW_TO_GND
2. DASIC_OFF
3. DASIC_SW_DET
4. GND
5. V_MON
6. VBULK
7. VBULK
8. VIN

STYLE 29:
PIN 1. BASE, DIE #1
2. EMITTER, #1
3. BASE, #2
4. EMITTER, #2
5. COLLECTOR, #2
6. COLLECTOR, #2
7. COLLECTOR, #1
8. COLLECTOR, #1

STYLE 30:
PIN 1. DRAIN 1
2. DRAIN 1
3. GATE 2
4. SOURCE 2
5. SOURCE 1/DRAIN 2
6. SOURCE 1/DRAIN 2
7. SOURCE 1/DRAIN 2
8. GATE 1

DOCUMENT NUMBER:	**98ASB42564B**	Electronic versions are uncontrolled except when accessed directly from the Document Repository. Printed versions are uncontrolled except when stamped "CONTROLLED COPY" in red.
DESCRIPTION:	**SOIC−8 NB**	**PAGE 2 OF 2**

ON Semiconductor and ON are trademarks of Semiconductor Components Industries, LLC dba ON Semiconductor or its subsidiaries in the United States and/or other countries. ON Semiconductor reserves the right to make changes without further notice to any products herein. ON Semiconductor makes no warranty, representation or guarantee regarding the suitability of its products for any particular purpose, nor does ON Semiconductor assume any liability arising out of the application or use of any product or circuit, and specifically disclaims any and all liability, including without limitation special, consequential or incidental damages. ON Semiconductor does not convey any license under its patent rights nor the rights of others.

© Semiconductor Components Industries, LLC, 2019

onsemi, onsemi, and other names, marks, and brands are registered and/or common law trademarks of Semiconductor Components Industries, LLC dba "**onsemi**" or its affiliates and/or subsidiaries in the United States and/or other countries. **onsemi** owns the rights to a number of patents, trademarks, copyrights, trade secrets, and other intellectual property. A listing of **onsemi**'s product/patent coverage may be accessed at www.onsemi.com/site/pdf/Patent−Marking.pdf. **onsemi** reserves the right to make changes at any time to any products or information herein, without notice. The information herein is provided "as−is" and **onsemi** makes no warranty, representation or guarantee regarding the accuracy of the information, product features, availability, functionality, or suitability of its products for any particular purpose, nor does **onsemi** assume any liability arising out of the application or use of any product or circuit, and specifically disclaims any and all liability, including without limitation special, consequential or incidental damages. Buyer is responsible for its products and applications using **onsemi** products, including compliance with all laws, regulations and safety requirements or standards, regardless of any support or applications information provided by **onsemi**. "Typical" parameters which may be provided in **onsemi** data sheets and/or specifications can and do vary in different applications and actual performance may vary over time. All operating parameters, including "Typicals" must be validated for each customer application by customer's technical experts. **onsemi** does not convey any license under any of its intellectual property rights nor the rights of others. **onsemi** products are not designed, intended, or authorized for use as a critical component in life support systems or any FDA Class 3 medical devices or medical devices with a same or similar classification in a foreign jurisdiction or any devices intended for implantation in the human body. Should Buyer purchase or use **onsemi** products for any such unintended or unauthorized application, Buyer shall indemnify and hold **onsemi** and its officers, employees, subsidiaries, affiliates, and distributors harmless against all claims, costs, damages, and expenses, and reasonable attorney fees arising out of, directly or indirectly, any claim of personal injury or death associated with such unintended or unauthorized use, even if such claim alleges that **onsemi** was negligent regarding the design or manufacture of the part. **onsemi** is an Equal Opportunity/Affirmative Action Employer. This literature is subject to all applicable copyright laws and is not for resale in any manner.

PUBLICATION ORDERING INFORMATION

LITERATURE FULFILLMENT:
Email Requests to: orderlit@onsemi.com

onsemi Website: www.onsemi.com

TECHNICAL SUPPORT
North American Technical Support:
Voice Mail: 1 800−282−9855 Toll Free USA/Canada
Phone: 011 421 33 790 2910

Europe, Middle East and Africa Technical Support:
Phone: 00421 33 790 2910
For additional information, please contact your local Sales Representative

◊