Safety Standard Recognized, ERP610 Series, Encapsulated, X1 760 VAC/Y1 500 VAC (Industrial Grade)

Overview

KEMET's ERO610 series encapsulated radial leaded ceramic disc capacitors are specifically designed for interference-suppression AC line filtering applications. Having internationally recognized safety certifications, these capacitors are well-suited for applications that require keeping potentially disruptive or damaging line transients and EMI out of susceptible equipment. They are also an ideal solution when needing to suppress line disturbances at the source.

Safety Certified Capacitors are classified as either X and/or Y capacitors. Class X capacitors are primarily used in line-to line (across-the-line) applications. In this application there is no danger of electric shock to humans should the capacitor fail, but could result in a risk of fire. The class Y capacitor is primarily used in line-to-ground (line by-pass) applications. In this application, failure of the capacitor could lead to danger of electric shock.

With a working voltage of 760 VAC in line-to-line (Class X) and 500 VAC in line-to-ground (Class Y) applications, these safety capacitors meet the impulse test criteria outlined in IEC Standard 60384. Meeting subclass X1 and Y1 requirements, these devices are certified to withstand impulses up to 4 KV (X1) and 8 KV (Y1) respectively. These encapsulated devices also meet the flame test requirements outlined in UL Standard 94V-0.

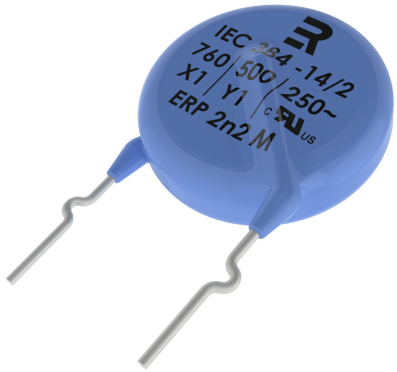

Click image above for interactive 3D content

Open PDF in Adobe Reader for full functionality

Ordering Information

ERP610	W	102	M	DF0
Ceramic Series	Voltage Rating (Safety Subclass Rating)	Capacitance Code (pF)	Capacitance Tolerance	Lead configuration / Packaging Code
ERP610	W = X1 760 VAC/Y1 500 VAC	Two significant digits and Number of zeroes	K = ±10% M = ±20%	*See Packaging Options

© KEMET Electronics Corporation • P.O. Box 5928 • Greenville, SC 29606 • 864-963-6300 • www.kemet.com

Packaging C-Spec Ordering Options Tables

Bulk Packaging[1]				
	LEAD LENGTH L	LEAD DIAMETER D	LEAD SPACING F	
			10 mm	12.5 mm
Straight leads	30 mm - 3 mm	0.6 mm	DF0	EF0
		0.8 mm	DJ0	EJ0
	10 mm ± 1 mm	0.6 mm	DD0	ED0
		0.8 mm	DH0	EH0
	6 mm - 1 mm	0.6 mm/0.8 mm	DB0	EB0
Preformed leads inside crimp	30 mm - 3 mm	0.6 mm		EFG
		0.8 mm		EJG
Preformed leads outside crimp	5 mm ± 1 mm	0.6 mm	TE0	TG0
		0.8 mm	TF0	TH0
Preformed leads snap-in	Minimum 2.8 mm	0.6 mm		QG0
	Minimum 3.5 mm	0.8 mm		QH0
Inline wire	Minimum 2.8 mm + 1.5 mm	0.6 mm	YE0	YG0
	Minimum 3.0 mm + 2.0 mm	0.8 mm	YF0	YH0

[1] 5 mm and 7 mm lead spacing options are not available for ERP610 Series.

Reel Packaging Component Pitch 25.4 mm[1]			
		TAPING F	
Lead spacing F		10 mm	12.5 mm
Body diameter D		All diameters	
Straight leads	H = 16.5 mm	DRT	ERT
	H = 18.0 mm	DRU	ERU
	H = 20.0 mm	DRY	ERY
Preformed leads inside crimp	H0 = 16.0 mm	–	ERZ
Preformed leads outside crimp	H0 = 16.0 mm	TDR	TER
Inline wire	H0 = 16.0 mm	YRD	YRE

[1] 5 mm and 7 mm lead spacing options are not available for ERP610 Series.

Benefits

- Safety Standard Recognized (IEC 60384-14)
- Reliable operation up to 125°C
- Class X1/Y1
- 10 mm and 12.5 mm lead spacing
- RoHS compliant
- Capacitance offerings ranging from 33 pF up to 4.7 nF
- Available capacitance tolerances of ±10% and ±20%
- High reliability
- Preformed (crimped) or straight lead configurations
- Non-polar device, minimizing installation concerns
- Encapsulation meets flammability standard UL 94V-0

Applications

Typical applications include line-to-Line (Class X) filtering, line to-ground (Class Y) filtering, antenna coupling, primary and secondary coupling (switching power supplies) and line disturbances suppression (motors and motor controls, relays, switching power supplies and invertors).

Approval Standard and Certification Number

Safety Standard	Specification	Certificate Number
VDE	EN 132400	40001993, 40001996
UL CAN/CSA	UL 60384–14 and E60384–14	E356389

These devices are VDE/ENEC recognized for antenna coupling and AC line-to-line (Class X) and line-to-ground (Class Y) applications per IEC60384–14.

Environmental Compliance

These devices are RoHS Compliant. They meet all requirements set forth by both EU and China RoHS directives.

Lead Configurations

Straight Leads

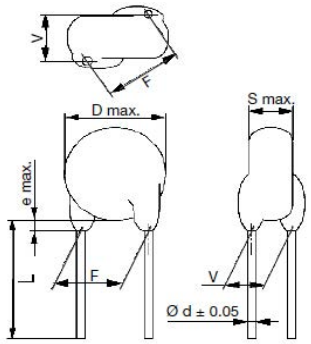

Φd	0.6 or 0.8			
L	30 - 3 or 10 ± 1			
F	5	7.5	10	12.5
e	3.0 mm Maximum			

Inside Kink

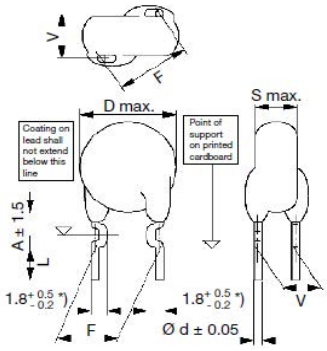

Φd	0.6 or 0.8		
F	7.5	10	12.5
A	4.0 ± 1.5	5.0 ± 1.5	6.0 ± 1.5
L	3.0 mm Minimum Tolerance: 1.0 mm absolute		

Outside Kink

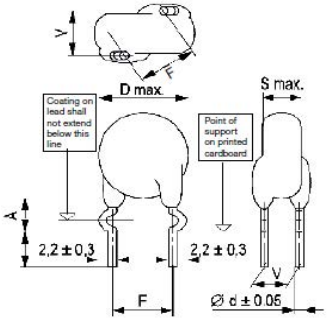

Φd	0.6	0.6 or 0.8			
F	5.0	7.5	7.5	10.0	12.5
A	5.0	5.0	6.0	6.0	6.0

Snap-In Leads

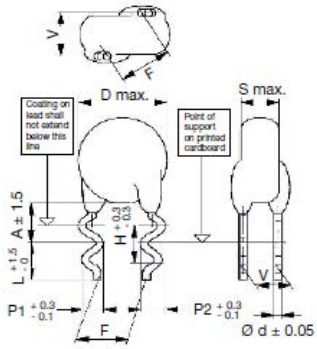

Φd	0.6	0.8
F	7.5 / 10 / 12.5	7.5 / 10 / 12.5
L	2.8 mm Minimum	3.5 mm Minimum
H	2.6	3.3
P1	1.25	1.65
P2	1.65	1.95
A	D - 8: 6.0 ± 1.5 D > 8: 7.0 ± 1.5	

Vertical Crimp

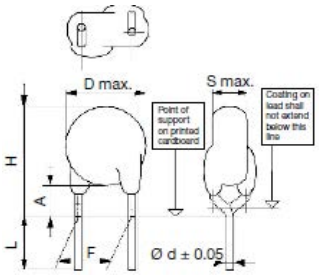

F	7.5	10	12.5
D	0.6	0.8	0.8
A	4.5 Maximum	6.0 Maximum	6.0 Maximum
L	2.8 Minimum 1.5 absolute	3.0 Minimum 2.0 absolute	3.0 Minimum 2.0 absolute

General Specifications/Performance Characteristics

Dielectric/Temperature Characteristic	U2J	Y5S	Y5T	Y5U
Operating Temperature Range:	−40°C to +125°C			
Capacitance Change with Reference to +25°C and 0 VDC Applied (TCC):	−750 ±120 ppm/°C	±22%	+22%/−33%	22%/−56%
Test Voltage Between Terminals	Component test: 4,000 VAC, 50 Hz, 2 seconds As repeated test admissible only once with 4,000 VAC, 50 Hz, 60 seconds Random sampling test (destructive test): 4,000 VAC, 50 Hz, 60 seconds			
Dielectric Strength of Body Insulation	4,000 VAC, 50 Hz,60 seconds (destructive test)			
[1]Dissipation Factor (tanδ) at +25°C[1]	0.50%	2.50%		
Insulation Resistance (IR) Limit at +25°C	10,000 MΩ Minimum (500 VDC applied for 60±5 seconds at 25°C)			

**C = Nominal capacitance*

[1] Capacitance and Dissipation Factor (DF) measured under the following conditions:

U2J: 1 MHz ± 100 kHz and 1.0 ±0.2 Vrms

Y5S, Y5T and Y5U: 1 kHz ± 50 Hz and 1.0 ±0.2 Vrms

Note: When measuring capacitance, it is important to ensure the set voltage level is held constant. The HP4284 & Agilent E4980 have a feature known as Automatic Level Control (ALC). The ALC feature should be switched to "ON."

Table 1 – Product Ordering Codes and Ratings

Dielectric/ Temp. Char.	KEMET Part Number	Capacitance	Capacitance Tolerance	Dimensions (mm)			Lead Spacing	
				Body Diameter (Maximum)	Body Thickness (Maximum)	Lead Diameter	Bulk Packaging	Ammo Packaging
U2J	ERP610W330	33 pF	±10% ±20%	8.0	6.0	0.6 0.8	10 12.5	
Y5S	ERP610W470	47 pF						
	ERP610W680	68 pF						
	ERP610W101	100 pF						
Y5T	ERP610W151	150 pF						
	ERP610W221	220 pF						
Y5U	ERP610W331	330 pF						
	ERP610W471	470 pF			5.0			
	ERP610W681	680 pF						
	ERP610W102	1000 pF		9.0				
	ERP610W152	1500 pF		10.0				
	ERP610W222	2200 pF		12.0				
	ERP610W272	2700 pF		13.0				
	ERP610W332	3300 pF		15.0				
	ERP610W392	3900 pF						
	ERP610W472	4700 pF		17.0				
	KEMET Part Number	Capacitance	Capacitance Tolerance	Body Diameter (Maximum)	Body Thickness (Maximum)	Lead Diameter	Lead Spacing	

(1) To properly complete ordering code, enter the three-digit alphanumeric "Packaging Code." See "Dimensions" section of this document, page 2, for available options.

Soldering and Mounting Information

Soldering Specifications		
	Solderability	Resistance to Soldering Heat
Soldering Temperature	235°C ± 5°C	260°C ± 5°C
Solder Duration	2 seconds ± 0.5 seconds	10 seconds ± 1.0 seconds
Distance from component body	≥ 2 mm	≥ 5 mm
CSA (cUL recognition)	C 22.2 No. 1-M90 (Ur=250 VAC)	216038

Soldering test for capacitors with wire leads: (according to IEC 60068-2-20, solder bath method)

Sodering Recommendations

When soldering this product to a PCB/PWB, do not exceed the solder heat resistance specification of the capacitor. Subjecting this product to excessive heating could reflow the solder joint between the lead and ceramic element and/or may result in thermal shocks that can crack the ceramic element.

Cleaning Recommendations

The components should be cleaned immediately following the soldering operation with vapor degreasers.

Marking

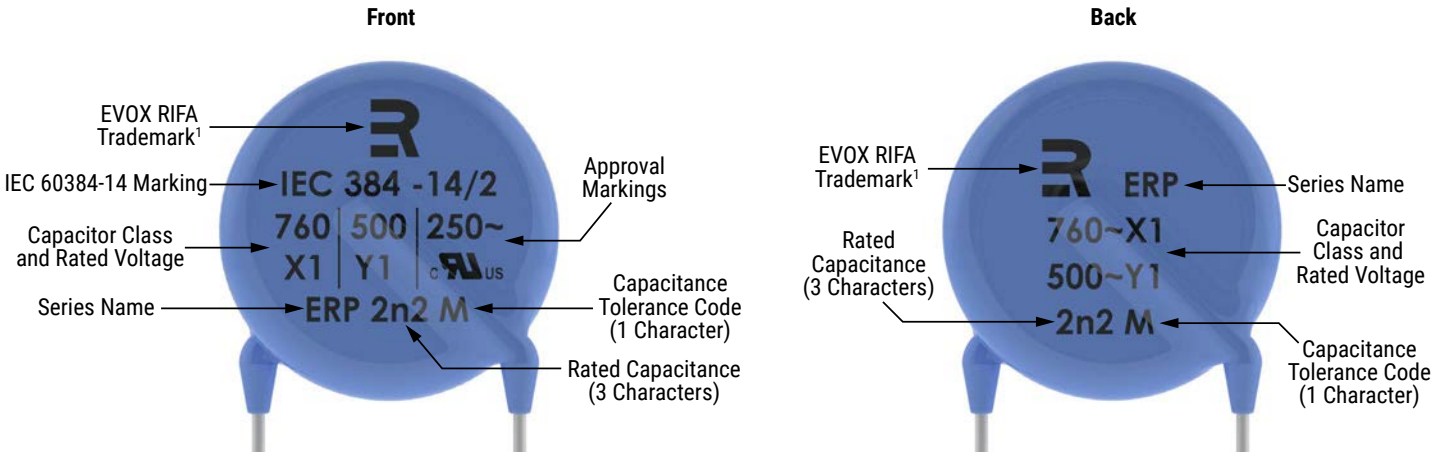

[1] EVOX RIFA and all associated products were acuired by KEMET in 2007. The EVOX RIFA trademark is still used on the capacitor marking.

Figure 1 - Ammo Pack Taping Format

TAPING P/T/U
COMPONENT PITCH 0.5 inch
LEAD SPACING 5.0 mm

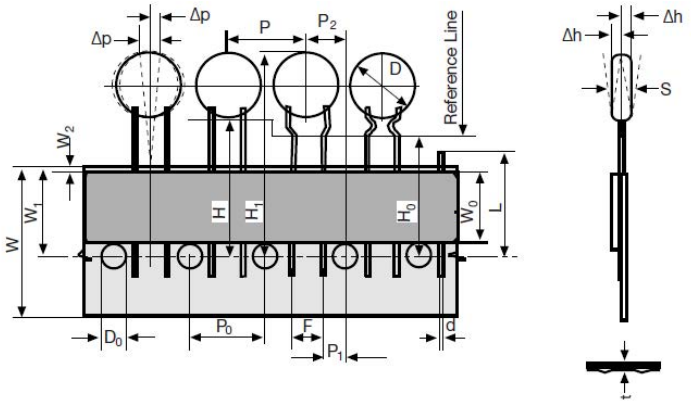

TAPING P/T/U
COMPONENT PITCH 0.5 inch
LEAD SPACING 7.5 mm

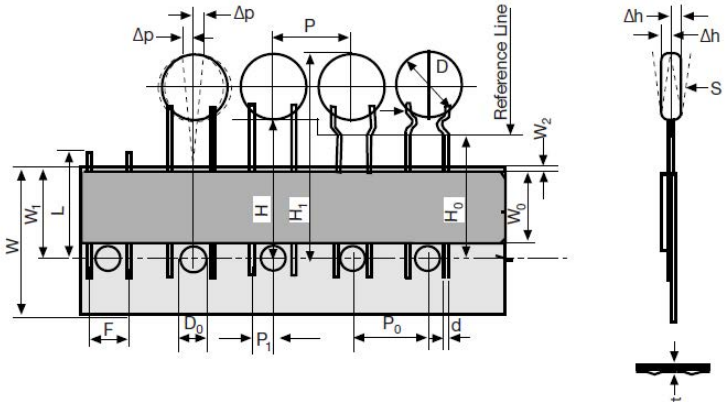

TAPING F
COMPONENT PITCH 1.0 inch
LEAD SPACING 5.0 mm, 7.5 mm, 10.0 mm, and 12.5 mm

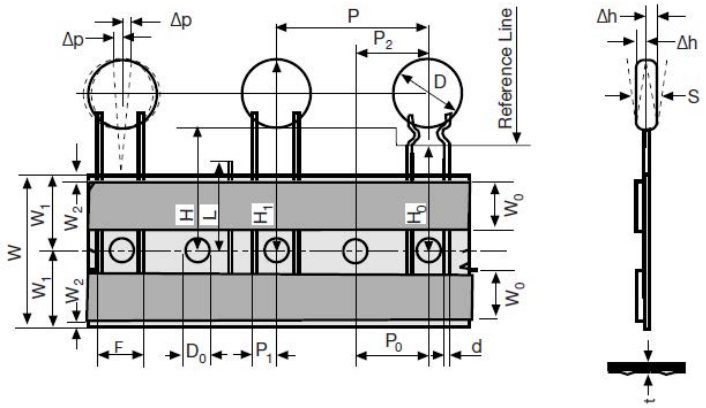

Table 3 – Ammo Pack Taping Specifications

Lead Style		TAPING P	TAPING T	TAPING U	TAPING F
Item	Symbol	Dimensions(mm)			
Pitch of component	P	12.7±1			25.4±1
Pitch of sprocket hole	P0	12.7±0.3			12.7±0.3
Distance, hole to lead	P1	3.85±0.7			(0.5F) ±0.7
Distance, hole to center of component	P2	6.35±1.3			12.7±1.3
Lead spacing	F	5.0/7.5+0.8/−0.2			5/7.5/10/12.5±0.8
Average deviation across tape	Δh	±2.0 Maximum			±3.0 Maximum
Average deviation in direction of reeling	Δp	±1.3 Maximum			±1.3 Maximum
Carrier tape width	W	18.0+1/−0.5			18.0+1/−0.5
Hold-down tape width	W0	6			6
Position of sprocket hole	W1	9.0+0.75/−0.5			9.0+0.75/−0.5
Distance of hold-down tape	W2	3.0 Maximum			3.0 Maximum
Distance between the abscissa and the bottom place of the component body (straight leads)	H	16.5±0.5	18.0+2/−0	20±1	16.5±0.5 18.0+2/−0 20.0±1
Distance between the abscissa and the bottom place of the component body (kinked leads)	H0	16.0±0.5			16.0±0.5
Length of cut leads	L	11.0 Maximum			11.0 Maximum
Diameter of sprocket hole	D0	4.0±0.2			4.0±0.2
Total tape thickness	t	0.9 Maximum			0.9 Maximum

[1] *Prefromed (crimped) lead configurations include vertical kink, outside kink and inside kink. See "Lead Configurations" and "Ordering Information" sections of this document for further details.*
[2] *Also referred to as "lead length" in this document.*

KEMET Electronic Corporation Sales Offices

For a complete list of our global sales offices, please visit www.kemet.com/sales.

Disclaimer

All product specifications, statements, information and data (collectively, the "Information") in this datasheet are subject to change. The customer is responsible for checking and verifying the extent to which the Information contained in this publication is applicable to an order at the time the order is placed.

All Information given herein is believed to be accurate and reliable, but it is presented without guarantee, warranty, or responsibility of any kind, expressed or implied.

Statements of suitability for certain applications are based on KEMET Electronics Corporation's ("KEMET") knowledge of typical operating conditions for such applications, but are not intended to constitute – and KEMET specifically disclaims – any warranty concerning suitability for a specific customer application or use. The Information is intended for use only by customers who have the requisite experience and capability to determine the correct products for their application. Any technical advice inferred from this Information or otherwise provided by KEMET with reference to the use of KEMET's products is given gratis, and KEMET assumes no obligation or liability for the advice given or results obtained.

Although KEMET designs and manufactures its products to the most stringent quality and safety standards, given the current state of the art, isolated component failures may still occur. Accordingly, customer applications which require a high degree of reliability or safety should employ suitable designs or other safeguards (such as installation of protective circuitry or redundancies) in order to ensure that the failure of an electrical component does not result in a risk of personal injury or property damage.

Although all product–related warnings, cautions and notes must be observed, the customer should not assume that all safety measures are indicted or that other measures may not be required.

KEMET is a registered trademark of KEMET Electronics Corporation.