molex
one company › a world of innovation

This document was generated on 05/21/2010

PLEASE CHECK WWW.MOLEX.COM FOR LATEST PART INFORMATION

Part Number: 0459841312

Status: Active

Overview: extreme_lphpower

Description: 1.27mm (.050"), 12.00mm (.472") Pitch, EXTreme LPHPower™ Receptacle Header, Right Angle, 10 Power Contacts, 12 Signal Contacts, Select Gold (Au) Plating, for 2.36mm (.093") Thick PC Board, with Press-fit Plastic Pegs

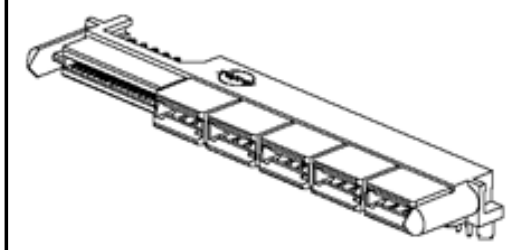

Series

image - Reference only

Documents:

3D Model
Drawing (PDF)
Product Specification PS-45984-001 (PDF)
RoHS Certificate of Compliance (PDF)

Agency Certification

CSA	LR 19980
UL	E29179

General

Product Family	PCB Receptacles
Series	45984
Application	Board-to-Board
Overview	extreme_lphpower
Product Name	EXTreme LPHPower™

Physical

Circuits (Loaded)	22
Circuits (maximum)	22
Circuits Detail	10 Power, 12 Signal
Color - Resin	Black
Durability (mating cycles max)	250
Flammability	94V-0
Glow-Wire Compliant	No
Guide to Mating Part	No
Keying to Mating Part	Yes
Lock to Mating Part	No
Material - Metal	High Performance Alloy (HPA), Phosphor Bronze
Material - Plating Mating	Gold
Material - Plating Termination	Tin
Material - Resin	High Temperature Thermoplastic
Number of Rows	2
Orientation	Right Angle
PC Tail Length (in)	0.142 In
PC Tail Length (mm)	3.60 mm
PCB Locator	Yes
PCB Retention	Yes
PCB Thickness Recommended (in)	0.093 In
PCB Thickness Recommended (mm)	2.36 mm
Packaging Type	Tray
Pitch - Mating Interface (in)	0.050 In, 0.472 In
Pitch - Mating Interface (mm)	1.27 mm, 12.00 mm
Plating min: Mating (µin)	30
Plating min: Mating (µm)	0.75
Plating min: Termination (µin)	150, 75
Plating min: Termination (µm)	1.875, 3.75
Polarized to Mating Part	Yes
Polarized to PCB	Yes
Stackable	No
Surface Mount Compatible (SMC)	Yes

EU RoHS
ELV and RoHS Compliant
REACH SVHC
Contains SVHC: No
Halogen-Free Status
Halogen-Free

China RoHS

Need more information on product environmental compliance?

Email productcompliance@molex.com
For a multiple part number RoHS Certificate of Compliance, click here

Please visit the Contact Us section for any non-product compliance questions.

Search Parts in this Series
45984Series

Mates With
45985 EXTreme LPHPower™ Headers, 1.57mm (.062") Card Edge

Temperature Range - Operating	-40°C to +105°C
Termination Interface: Style	Through Hole

Electrical

Current - Maximum per Contact	20A
Grounding to PCB	No
Voltage - Maximum	250V AC (RMS)/DC

Solder Process Data

Duration at Max. Process Temperature (seconds)	20
Lead-free Process Capability	Wave Capable (TH only)
Max. Cycles at Max. Process Temperature	3
Process Temperature max. C	260

Material Info

Reference - Drawing Numbers

Packaging Specification	PK-45984-001
Product Specification	PS-45984-001
Sales Drawing	SD-45984-100

This document was generated on 05/21/2010

PLEASE CHECK WWW.MOLEX.COM FOR LATEST PART INFORMATION

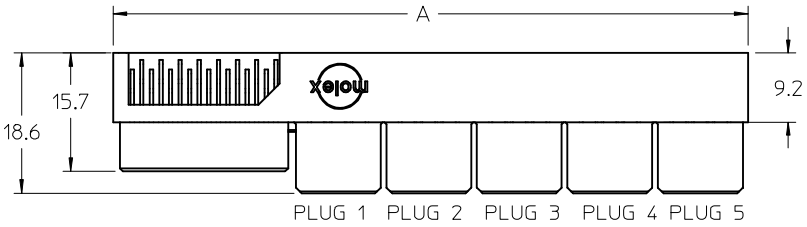

NOTES:

1. MATERIAL HOUSING: LCP, 94V-0, COLOR-BLACK.
   CONTACT: COPPER ALLOY.
2. FINISH: SELECT GOLD - .76 µM/30 MI MIN. CONTACT.
   SELECT TIN - 3.81 µM/150 MI MIN. TAIL.
   BOTH OVER NICKEL - 1.27 µM/50 MI MIN.
3. POWER TERMINALS LUBRICATED IN CONTACT AREA.
4. PRODUCT SPECIFICATION: PS-45984-001.
5. PACKAGING: TRAY PER PK-45984-001.
6. SEE SHEET 5 FOR CKT IDENTIFICATION.
7. PARTS ARE RoHS COMPLIANT.
8. PEG HOLES ARE OPTIONAL
9. MATES TO 1.57/.062 CARD EDGE OR
   MOLEX P/N 45985-1***

NO OF SIGNAL	MATERIAL NUMBER	DIM A	DIM P	PCB THK
12	45984-1111	71.5	4.50	3.18
16	45984-1121	74.0		
20	45984-1131	76.6		
24	45984-1141	79.1		
28	45984-1151	81.6		
32	45984-1161	84.2		
36	45984-1171	86.7		
40	45984-1181	89.3		
12	45984-1112	71.5	3.60	2.36
16	45984-1122	74.0		
20	45984-1132	76.6		
24	45984-1142	79.1		
28	45984-1152	81.6		
32	45984-1162	84.2		
36	45984-1172	86.7		
40	45984-1182	89.3		
12	45984-1113	71.5	2.90	1.57
16	45984-1123	74.0		
20	45984-1133	76.6		
24	45984-1143	79.1		
28	45984-1153	81.6		
32	45984-1163	84.2		
36	45984-1173	86.7		
40	45984-1183	89.3		

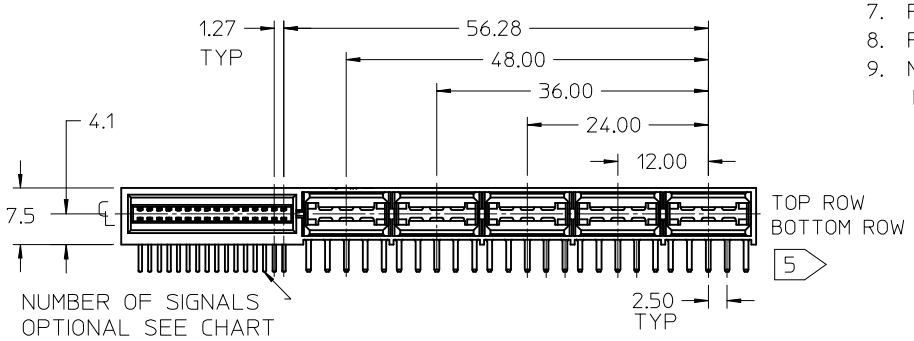

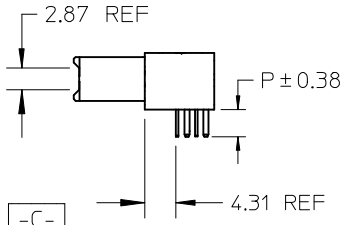

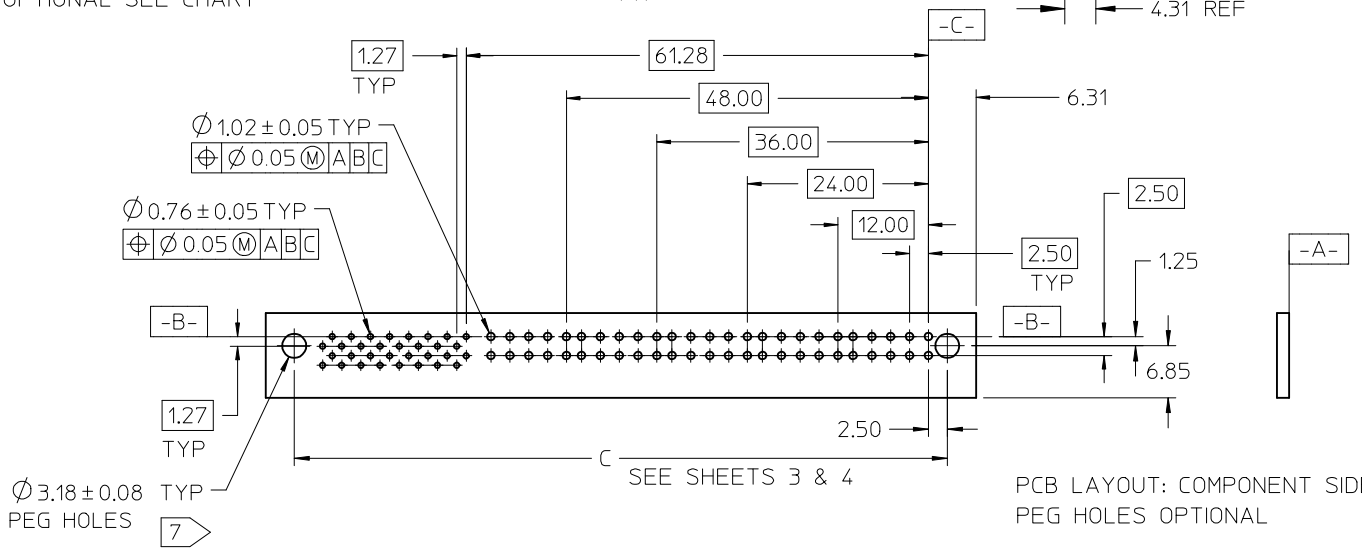

PCB LAYOUT: COMPONENT SIDE
PEG HOLES OPTIONAL

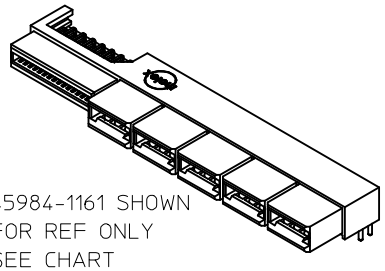

45984-1161 SHOWN
FOR REF ONLY
SEE CHART

REV	DESCRIPTION
E	REVISED EC NO: UCP2009-0971 2008/11/13 DRWN:MBANDURA 2008/11/14 CH'KD: 2008/11/17 APPR:APATEL

GENERAL TOLERANCES (UNLESS SPECIFIED)

	mm	INCH
4 PLACES	± ---	± ---
3 PLACES	± ---	± ---
2 PLACES	± 0.25	± ---
1 PLACE	± ---	± ---
ANGULAR ±1/2°		

DRAFT WHERE APPLICABLE MUST REMAIN WITHIN DIMENSIONS

DIMENSION STYLE: MM ONLY
SCALE: 1:1
DESIGN UNITS: METRIC
THIRD ANGLE PROJECTION

DRAWN BY: SAMIEC DATE: 2005/05/13
CHECKED BY: SAMIEC DATE: 2005/05/13
APPROVED BY: MARGULIS DATE: 2005/05/13

TITLE: LPH RECEPTACLE ASSEMBLY RT ANGLE 10 CIRCUIT POWER CONNECTOR

MOLEX INCORPORATED

MATERIAL NO.: SEE CHART
DOCUMENT NO.: SD-45984-100
SHEET NO.: 1 OF 5

SIZE: A

THIS DRAWING CONTAINS INFORMATION THAT IS PROPRIETARY TO MOLEX INCORPORATED AND SHOULD NOT BE USED WITHOUT WRITTEN PERMISSION

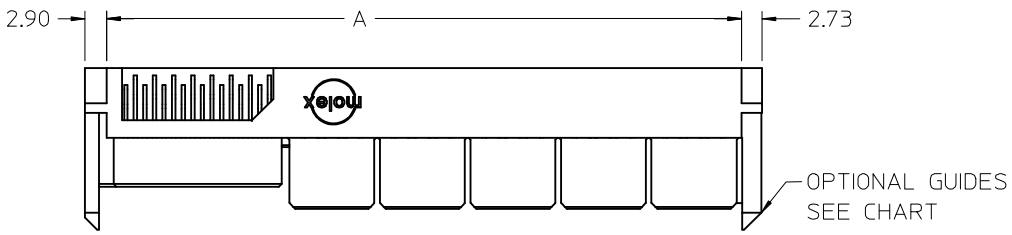

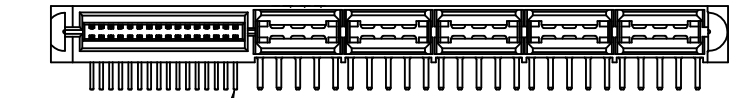

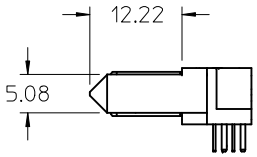

NO OF SIGNALS
OPTIONAL
SEE CHART

GUIDE POST OPTIONS

NO OF SIGNAL	MATERIAL NUMBER	DIM A	DIM P	PCB THK
12	45984-1211	71.5	4.50	3.18
16	45984-1221	74.0		
20	45984-1231	76.6		
24	45984-1241	79.1		
28	45984-1251	81.6		
32	45984-1261	84.2		
36	45984-1271	86.7		
40	45984-1281	89.3		
12	45984-1212	71.5	3.60	2.36
16	45984-1222	74.0		
20	45984-1232	76.6		
24	45984-1242	79.1		
28	45984-1252	81.6		
32	45984-1262	84.2		
36	45984-1272	86.7		
40	45984-1282	89.3		
12	45984-1213	71.5	2.90	1.57
16	45984-1223	74.0		
20	45984-1233	76.6		
24	45984-1243	79.1		
28	45984-1253	81.6		
32	45984-1263	84.2		
36	45984-1273	86.7		
40	45984-1283	89.3		

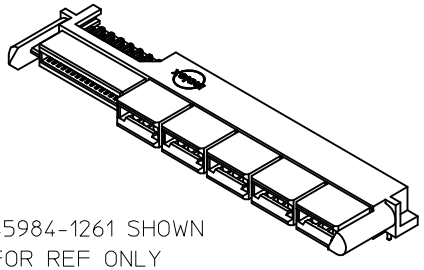

45984-1261 SHOWN
FOR REF ONLY
SEE CHART

REV	DESCRIPTION
E	REVISED EC NO: UCP2009-0971 DRWN:MBANDURA 2008/11/13 CH'KD: 2008/11/14 APPR:APATEL 2008/11/17

GENERAL TOLERANCES (UNLESS SPECIFIED)

	mm	INCH
4 PLACES	± ---	± ---
3 PLACES	± ---	± ---
2 PLACES	± 0.25	± ---
1 PLACE	± ---	± ---

ANGULAR ±1/2°

DRAFT WHERE APPLICABLE MUST REMAIN WITHIN DIMENSIONS

DIMENSION STYLE: MM ONLY
SCALE: 1:1
DESIGN UNITS: METRIC
THIRD ANGLE PROJECTION

DRAWN BY: SAMIEC DATE: 2005/05/13
CHECKED BY: SAMIEC DATE: 2005/05/13
APPROVED BY: MARGULIS DATE: 2005/05/13

TITLE: LPH RECEPTACLE ASSEMBLY RT ANGLE 10 CIRCUIT POWER CONNECTOR

MOLEX INCORPORATED

MATERIAL NO.: SEE CHART
DOCUMENT NO.: SD-45984-100
SHEET NO.: 2 OF 5
SIZE: A

THIS DRAWING CONTAINS INFORMATION THAT IS PROPRIETARY TO MOLEX INCORPORATED AND SHOULD NOT BE USED WITHOUT WRITTEN PERMISSION

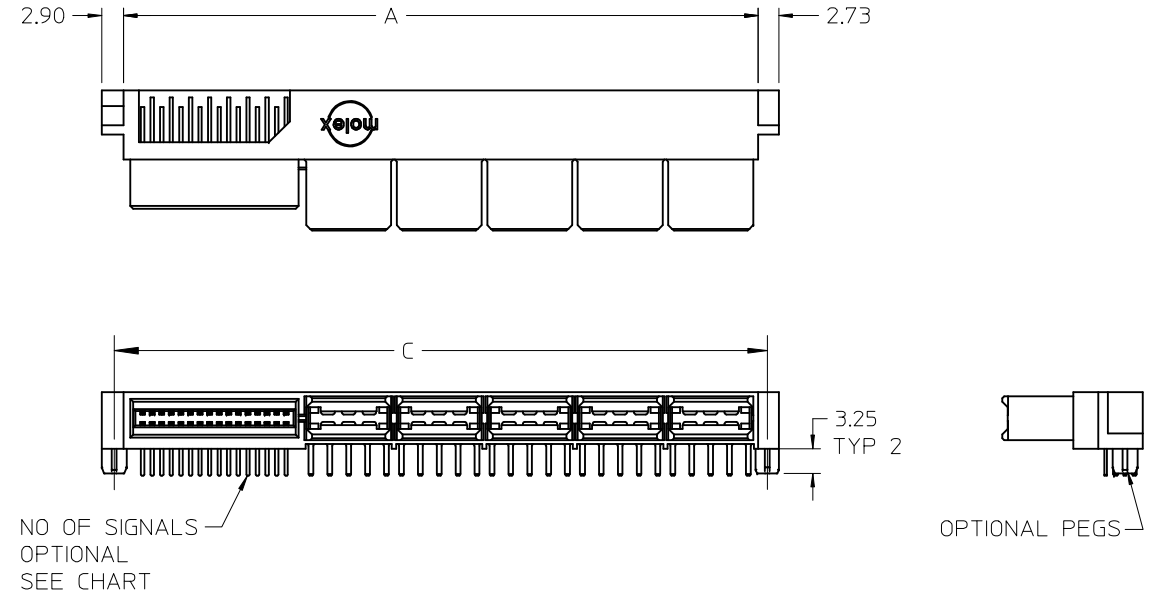

MOUNTING PEG OPTIONS

NO OF SIGNAL	MATERIAL NUMBER	DIM A	DIM C	DIM P	PCB THK
12	45984-1311	71.5	73.90	4.50	3.18
16	45984-1321	74.0	76.44		
20	45984-1331	76.6	78.98		
24	45984-1341	79.1	81.52		
28	45984-1351	81.6	84.06		
32	45984-1361	84.2	86.60		
36	45984-1371	86.7	89.14		
40	45984-1381	89.3	91.68		
12	45984-1312	71.5	73.90	3.60	2.36
16	45984-1322	74.0	76.44		
20	45984-1332	76.6	78.98		
24	45984-1342	79.1	81.52		
28	45984-1352	81.6	84.06		
32	45984-1362	84.2	86.60		
36	45984-1372	86.7	89.14		
40	45984-1382	89.3	91.68		
12	45984-1313	71.5	73.90	2.90	1.57
16	45984-1323	74.0	76.44		
20	45984-1333	76.6	78.98		
24	45984-1343	79.1	81.52		
28	45984-1353	81.6	84.06		
32	45984-1363	84.2	86.60		
36	45984-1373	86.7	89.14		
40	45984-1383	89.3	91.68		

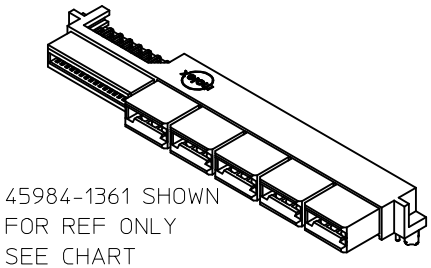

45984-1361 SHOWN
FOR REF ONLY
SEE CHART

REV	DESCRIPTION
E	REVISED EC NO: UCP2009-0971 DRWN:MBANDURA 2008/11/13 CH'KD: 2008/11/14 APPR:APATEL 2008/11/17

GENERAL TOLERANCES (UNLESS SPECIFIED)

	mm	INCH
4 PLACES	± ---	± ---
3 PLACES	± ---	± ---
2 PLACES	± 0.25	± ---
1 PLACE	± ---	± ---
ANGULAR ±1/2°		

DRAFT WHERE APPLICABLE MUST REMAIN WITHIN DIMENSIONS

DIMENSION STYLE: MM ONLY
SCALE: 1:1
DESIGN UNITS: METRIC
THIRD ANGLE PROJECTION

DRAWN BY: SAMIEC DATE: 2005/05/13
CHECKED BY: SAMIEC DATE: 2005/05/13
APPROVED BY: MARGULIS DATE: 2005/05/13

TITLE: LPH RECEPTACLE ASSEMBLY RT ANGLE 10 CIRCUIT POWER CONNECTOR

MOLEX INCORPORATED

MATERIAL NO.: SEE CHART
DOCUMENT NO.: SD-45984-100
SHEET NO.: 3 OF 5
SIZE: A

THIS DRAWING CONTAINS INFORMATION THAT IS PROPRIETARY TO MOLEX INCORPORATED AND SHOULD NOT BE USED WITHOUT WRITTEN PERMISSION

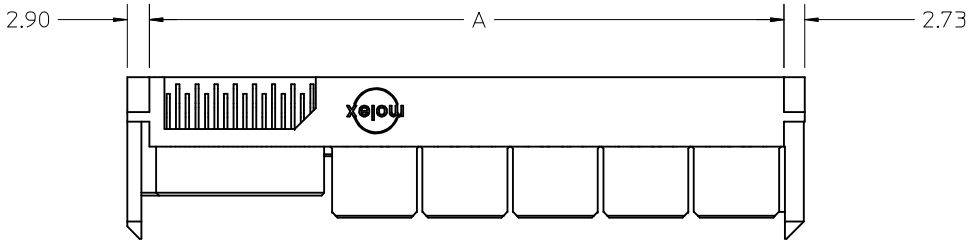

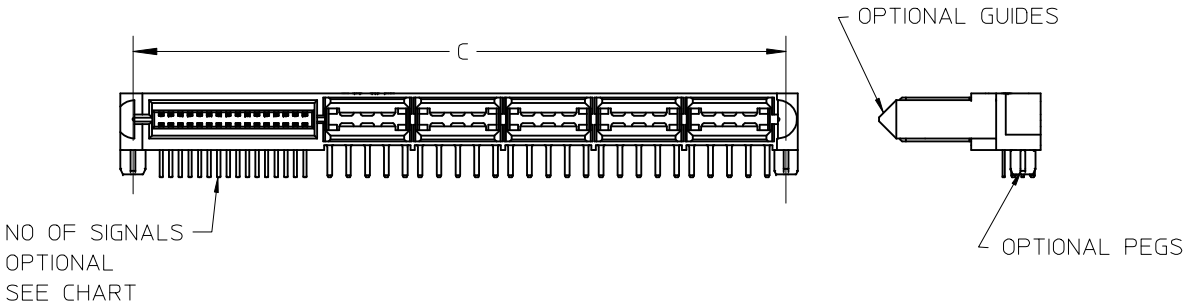

GUIDE POST & MOUNTING PEG OPTIONS

NO OF SIGNAL	MATERIAL NUMBER	DIM A	DIM C	DIM P	PCB THK
12	45984-1411	71.5	73.90	4.50	3.18
16	45984-1421	74.0	76.44		
20	45984-1431	76.6	78.98		
24	45984-1441	79.1	81.52		
28	45984-1451	81.6	84.06		
32	45984-1461	84.2	86.60		
36	45984-1471	86.7	89.14		
40	45984-1481	89.3	91.68		
12	45984-1412	71.5	73.90	3.60	2.36
16	45984-1422	74.0	76.44		
20	45984-1432	76.6	78.98		
24	45984-1442	79.1	81.52		
28	45984-1452	81.6	84.06		
32	45984-1462	84.2	86.60		
36	45984-1472	86.7	89.14		
40	45984-1482	89.3	91.68		
12	45984-1413	71.5	73.90	2.90	1.57
16	45984-1423	74.0	76.44		
20	45984-1433	76.6	78.98		
24	45984-1443	79.1	81.52		
28	45984-1453	81.6	84.06		
32	45984-1463	84.2	86.60		
36	45984-1473	86.7	89.14		
40	45984-1483	89.3	91.68		

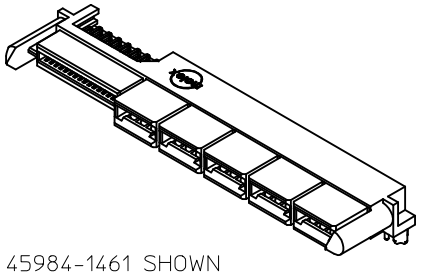

45984-1461 SHOWN
FOR REF ONLY
SEE CHART

REV	DESCRIPTION
E	REVISED EC NO: UCP2009-0971 DRWN:MBANDURA 2008/11/13 CH'KD: 2008/11/14 APPR:APATEL 2008/11/17

GENERAL TOLERANCES (UNLESS SPECIFIED)

	mm	INCH
4 PLACES	± ---	± ---
3 PLACES	± ---	± ---
2 PLACES	± 0.25	± ---
1 PLACE	± ---	± ---
ANGULAR ±1/2°		

DRAFT WHERE APPLICABLE MUST REMAIN WITHIN DIMENSIONS

DIMENSION STYLE: MM ONLY
SCALE: 1:1
DESIGN UNITS: METRIC
THIRD ANGLE PROJECTION

DRAWN BY: SAMIEC DATE: 2005/05/13
CHECKED BY: SAMIEC DATE: 2005/05/13
APPROVED BY: MARGULIS DATE: 2005/05/13

TITLE: LPH RECEPTACLE ASSEMBLY RT ANGLE 10 CIRCUIT POWER CONNECTOR

molex MOLEX INCORPORATED

MATERIAL NO.: SEE CHART
DOCUMENT NO.: SD-45984-100
SHEET NO.: 4 OF 5
SIZE: A

THIS DRAWING CONTAINS INFORMATION THAT IS PROPRIETARY TO MOLEX INCORPORATED AND SHOULD NOT BE USED WITHOUT WRITTEN PERMISSION

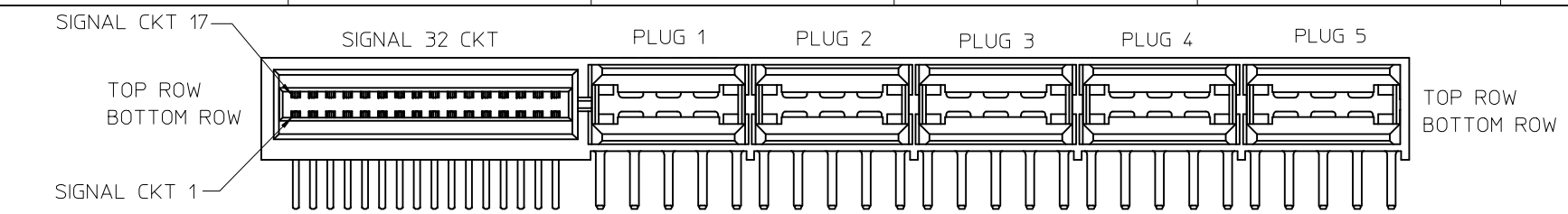

NO. OF SIGNAL	DIM. D
12	8.00
16	10.54
20	13.08
24	15.62
28	18.16
32	20.70
36	23.24
40	25.78

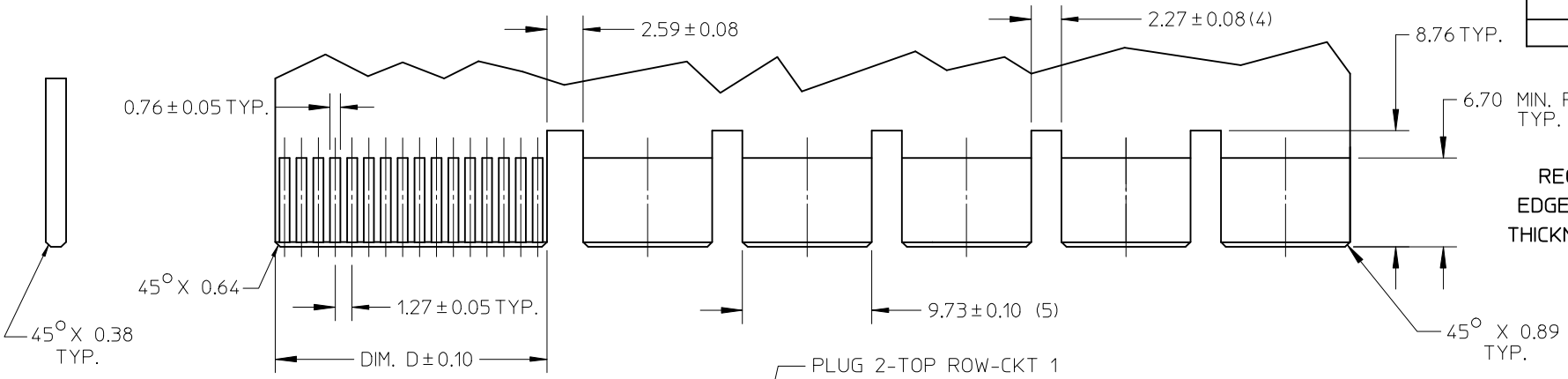

RECOMMENDED
EDGE CARD LAYOUT
THICKNESS: 1.57/.062

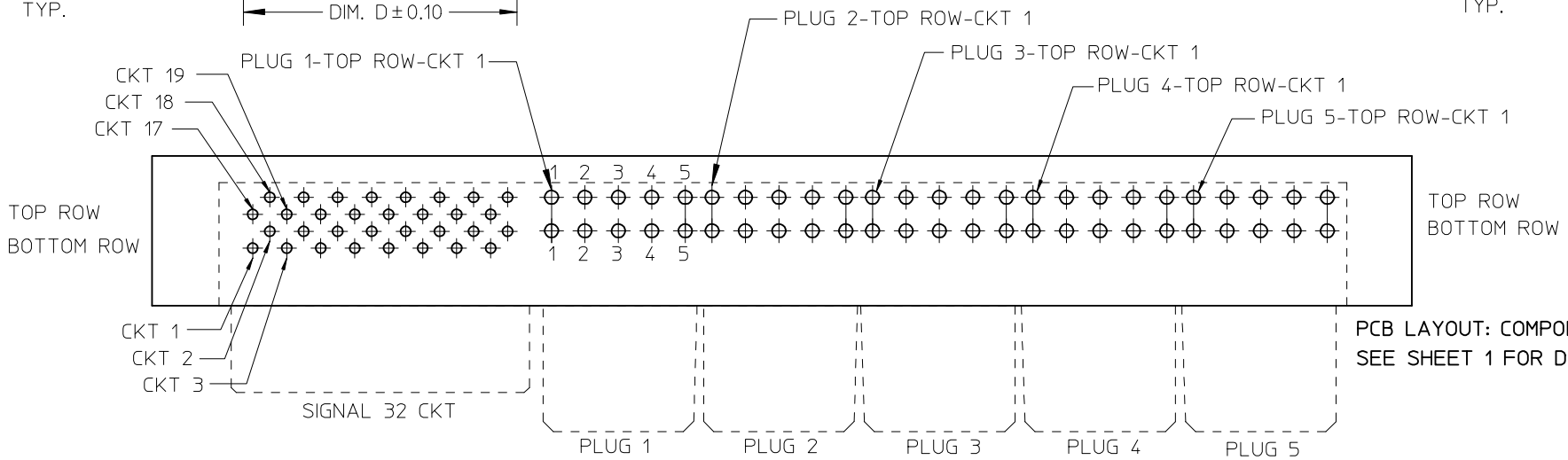

PCB LAYOUT: COMPONENT SIDE
SEE SHEET 1 FOR DIMENSIONS

REV	DESCRIPTION	
E	REVISED	
	EC NO: UCP2009-0971	2008/11/13
	DRWN:MBANDURA	2008/11/14
	CH'KD:	
	APPR:APATEL	2008/11/17

GENERAL TOLERANCES (UNLESS SPECIFIED)

	mm	INCH
4 PLACES	± ---	± ---
3 PLACES	± ---	± ---
2 PLACES	± 0.25	± ---
1 PLACE	± ---	± ---
ANGULAR ±1/2°		

DRAFT WHERE APPLICABLE MUST REMAIN WITHIN DIMENSIONS

DIMENSION STYLE: MM ONLY
SCALE: 2:1
DESIGN UNITS: METRIC
THIRD ANGLE PROJECTION

DRAWN BY	SAMIEC	DATE 2005/05/13
CHECKED BY	SAMIEC	DATE 2005/05/13
APPROVED BY	MARGULIS	DATE 2005/05/13
MATERIAL NO.		

TITLE: LPH RECEPTACLE ASSEMBLY RT ANGLE 10 CIRCUIT POWER CONNECTOR

molex MOLEX INCORPORATED

DOCUMENT NO. SD-45984-100

SHEET NO. 5 OF 5

SIZE A

THIS DRAWING CONTAINS INFORMATION THAT IS PROPRIETARY TO MOLEX INCORPORATED AND SHOULD NOT BE USED WITHOUT WRITTEN PERMISSION