One Cell Lithium-ion/Polymer Battery Protection IC

■ DESCRIPTION

The HM5464C series product is a high integration solution for lithium-ion/polymer battery protection. HM5464C contains advanced power MOSFET, high-accuracy voltage detection circuits and delay circuits. HM5464C is put into a small package and only one external component makes it an ideal solution in limited space of battery pack. HM5464C has all the protection functions required in the battery application including overcharging, over-discharging, overcurrent and load short circuiting protection etc. The accurate safe and full utilization charging. The low standby current drains little current from the cell while in storage. The device is only targeted for digital cellular phones, but also for any other Li-ion and Li-Poly battery-powered information appliance requiring long-term battery life.

■ FEATURE

- Protection of Battery Cell Reverse Connection
- Integrate MOSFET
- Over-temperature Protection
- Two-step Overcurrent Detection:
  - Over-discharge Current
  - Load Short Circuiting
- Charger Detection Function
- 0V Battery Charging Function
- High-accuracy Voltage Detection
- Low Current Consumption
- Operation Mode: 4uA typ
- Power-down Mode: 2.0uA typ

■ APPLICATIONS

- One-Cell Lithium-ion Battery Pack
- Lithium-Polymer Battery Pack

■ PIN CONFIGURATION

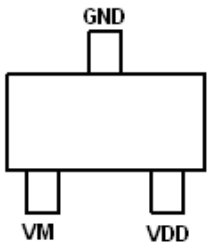

SOT23-3
TOP View

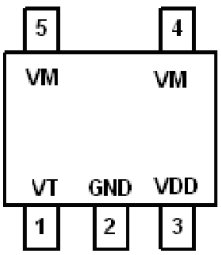

SOT23-5

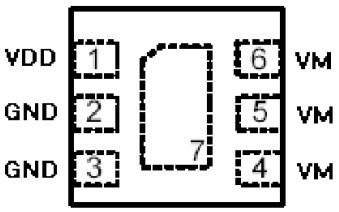

DFN2x2-6

■ PART NUMBER INFORMATION

HM5464C	X=Package Code VR: SOT23 MR: SOT23-5L D: DFN2X2-6L

■ ORDERING INFROMATION

Part Number	Overcharge Detection Voltage	Overcharge Release Voltage	Overdischarge Detection Voltage	Overdischarge Release Voltage	OverCurrent Detection Current
HM5464CMR	4.4	4.2	2.4	3.0	3.0
HM5464CVR	4.4	4.2	2.4	3.0	3.0
HM5464CD	4.4	4.2	2.4	3.0	3.0

■ ABSOLUTE MAXIMUM RATINGS (T_A = 25℃ Unless otherwise noted)

Symbol	Parameter	Typical	Unit
V_{DD}	Supply Voltage	-0.3~6	V
VM	Input Pin Voltage	-6~8	V
T_J	Operation Junction Temperature	150	℃
T_{STG}	Storage Temperature Range	-55~+125	℃
T_{OPR}	Operation Temperature	-40~+80	℃

Note: Absolute maximum ratings are those values beyond which the device could be permanently damaged. Absolute maximum ratings are stress rating only and functional device operation is not implied

■ THERMAL DATA

Symbol	Parameter	Package	Max	Unit
$R_{\theta JA}$	Thermal Resistance-Junction to Ambient	SOT23	500	℃/W
		SOT23-5L	200	℃/W
		DFN2X2-6L	200	℃/W
P_D	Power Dissipation	SOT23	0.2	W
		SOT23-5L	0.3	W
		DFN2X2-6L	0.5	W

■ ELECTRICAL CHARACTERISTICS(T_A=25℃ Unless otherwise noted)

Symbol	Parameter	Condition	Min	Typ	Max	Unit
Detection Voltage						
V_{CU}	Overcharge Detection Voltage		V_{CU}-0.05	V_{CU}	V_{CU}+0.05	V
V_{CL}	Overcharge Release Voltage		V_{CL}-0.05	V_{CL}	V_{CL}+0.05	V
V_{DL}	Overdischarge Detection Voltage		V_{DL}-0.1	V_{DL}	V_{DL}+0.1	V
V_{DR}	Overdischarge Release Voltage		V_{DR}-0.1	V_{DR}	V_{DR}+0.1	V
V_{CHA}	Charger Detection Voltage			-0.12		V
Detection Current						
I_{IOV}	Overdischarge Current Detection	V_{DD}=3.5V	2.1	3.0	3.9	A
I_{SHORT}	Load Short-Circuiting Detection	V_{DD}=3.5V	8	12	16	A
Current Consumption						
I_{OPE}	Current Consumption in Normal Operation	V_{DD}=3.5V VM=0V		4	6	uA
I_{PDN}	Current Consumption in Power Down	V_{DD}=2.0V VM pin floating		2	3.5	uA
VM Internal Resistance						
*R_{VMD}	Internal Resistance Between VM and VDD	V_{DD}=3.5V VM=1.0V		320		kΩ
*R_{VMS}	Internal Resistance Between VM and GND	V_{DD}=2.0V VM=1.0V		100		kΩ
FET on Resistance						
*$R_{SS(ON)}$	Equivalent FET on Resistance	V_{DD}=3.6V I_{VM}=1.0A	35	45	55	mΩ
Over Temperature Protection						
*T_{SHD+}	Over Temperature Protection			120		℃
*T_{SHD-}	Over Temperature Recovery Degree			100		℃
Detection Delay Time						
t_{CU}	Overcharge Voltage Detection Delay Time			150	200	mS
t_{DL}	Overdischarge Voltage Detection Delay Time			80	120	mS
*t_{IOV}	Overdischarge Current Detection Delay Time			10	20	mS
*t_{SHORT}	Load Short-Circuiting Detection Delay Time			150	200	uS

Note: * The parameter is guaranteed by design

■ FUNCTIONAL DESCRIPTION

The HM5464C the voltage and current of a battery and protects it from being damaged due to overcharge voltage, overdischarge voltage, overdischarge current, and short circuit conditions by disconnecting the battery from the load or charger. These functions are required in order to operate the battery cell within specified limits. The device requires only one external capacitor. The MOSFET is integrated and its $R_{SS(ON)}$ is as low as 45mΩ typical

Normal operating mode

If no exception condition is detected, charging and discharging can be carried out freely. This condition is called the normal operating mode.

Overcharge Condition

When the battery voltage becomes higher than the overcharge detection voltage (V_{CU}) during charging under normal condition and the state continues for the overcharge detection delay time (t_{CU}) or longer, the HM5464C turns the charging control FET off to stop charging. This condition is called the overcharge condition. The overcharge condition is released in the following two cases:

1. When the battery voltage drops below the overcharge release voltage (V_{CL}), the HM5464C turns the charging control FET on and returns to the normal condition.
2. When a load is connected and discharging starts, the HM5464C turns the charging control FET on and returns to the normal condition. The release mechanism is as follows: the discharging current flows through an internal parasitic diode of the charging FET immediately after a load is connected and discharging starts, and the VM pin voltage increases about 0.7V(forward voltage of the diode) from the GND pin voltage momentarily the HM5464C detects this voltage and releases the overcharge condition. Consequently, in the case that the battery voltage is equal to or lower than the overcharge detection voltage (V_{CU}), the HM5464C returns to the normal condition immediately, but in the case the battery voltage is higher than the overcharge detection voltage (V_{CU}), the chip does not return to the normal condition until the battery voltage drops below the overcharge detection voltage (V_{CU}) even if the load is connected. In addition. If the VM pin voltage is equal to or lower than the overcurrent 1 detection voltage when a load is connected and discharging starts, load is connected and discharging starts, the chip does not return to the normal condition

   Remark If the battery is charged to a voltage higher than the overcharge detection voltage (V_{CU}) and the battery voltage does not drop below the overcharge detection voltage (V_{CU}) even when a heavy load, which causes an overcurrent, is connected, the overcurrent 1 and overcurrent 2 do not work until the battery voltage drops below the overcharge detection voltage (V_{CU}). Since an actual battery has, however, an internal impedance of several dozens of mΩ, and the battery voltage drops immediately after a heavy load which causes an overcurrent is connected, the overcurrent 1 and overcurrent 2 work. Detection of load short-circuiting works regardless of the battery voltage.

   Overdischarge Condition

   When the battery voltage drops below the overdischarge detection voltage (V_{DL}) during discharging under normal condition and it continues for the overdischarge detection delay time (t_{DL}) or longer, the HM5464C turns the discharging condition. After the discharging control FET is turned off, the VM pin is pulled up by the R_{VMD} resistor between VM and VDD in HM5464C. meanwhile when VM is bigger than 1.5V (typ.) (the load short-circuiting detection voltage), the current of the chip reduced to the power-down current (I_{PDN}). This

condition is called power-down condition. The VM and VDD pins are shorted by the R_{VMD} resistor in the IC under the overdischarge and power-down conditions. The power-down condition is released when a charger is connected and the potential difference between VM and VDD becomes 1.3V (typ.) or higher (load short-circuiting detection voltage). At this time, the FET is still off. When the battery voltage becomes the overdischarge detection voltage (V_{DL}) or higher (see note), the HM5464C turns the FET on and changes to the normal condition from the overdischarge condition.

Remark If the VM pin voltage is no less than the charger detection voltage (V_{CHA}), the battery under overdischarge condition is connected to a charger, the overdischarge condition is released (the discharging control FET is turned on) as usual, provided that the battery voltage reaches the overdischarge release voltage (V_{DU}) or higher.

Overcurrent Condition

When the discharging current becomes equal to or higher than a specified value (the VM pin voltage is equal to or higher than the overcurrent detection voltage) during discharging under normal condition and the state continues for the overcurrent detection delay time or longer, the HM5464C turns off the discharging control FET to stop discharging. This condition is called overcurrent condition. (The overcurrent includes overcurrent or load short-circuiting). The VM and GND pins are shorted internally by the R_{VMS} resistor under the overcurrent condition. When a load is connected, the VM pin voltage equals the VDD voltage due to the load. The overcurrent condition returns to the normal condition when the load is released and the impedance between the B+ and B- pins becomes higher than the automatic recoverable impedance. When the load is removed, the VM pin goes back to the GND potential since the VM pin potential is lower than the overcurrent detection voltage (V_{IOV1}), the IC returns to the normal condition.

Abnormal Charge Current Detection

If the VM pin voltage drops below the charger detection voltage (V_{CHA}) during charging under the normal condition and it continues for the overcharge detection delay time (t_{CU}) or longer, the HM5464C turns the charging control FET off and stops charging. This action is called abnormal charge current detection. Abnormal charge current detection works when the discharging control FET is on and the VM pin voltage droops below the charger detection voltage (V_{CHA}). When an abnormal charge current flows into a battery in the overdischarge condition, the HM5464C consequently turns the charging control FET off and stops charging after the battery voltage becomes the overdischarge detection voltage and the overcharge detection delay time (t_{CU}) elapses. Abnormal charge current detection is released when the voltage difference between VM pin and GND pin becomes lower than the charger detection voltage (V_{CHA}) by separating the charger. Since the 0V battery charging function has higher priority than the abnormal charge current detection function, abnormal charge current may not be detected by the product with the 0V battery charging function while the battery voltage is low.

Load Short-circuiting Condition

If voltage of VM pin is equal or below short-circuiting protection voltage (V_{SHORT}), the HM5464C will stop discharging and battery is disconnected from load. The maximum delay time to switch current off is t_{SHORT}. This status is released when voltage of VM pin is higher than short protection voltage (V_{SHORT}), such as when disconnecting the load.

Delay Circuits

The detection delay time for overdischarge current 2 and load short-circuiting starts when overdischarge current 1 is detected. As soon as overdischarge current 2 or load short-circuiting is detected over detection delay time for overdischarge current 2 or load short-circuiting, the HM5464C stops discharging. When battery voltage falls below overdischarge detection voltage due to overdischarge current, the HM5464C stop discharging by overdischarge current detection. In this case the recovery of battery voltage is so slow that if battery voltage after overdischarge voltage detection delay time is still lower than overdischarge detection voltage, the HM5464C shifts to power-down.

0V Battery Charging Function [1 2 3]

This function enables the charging of a connected battery whose voltage is 0V by self-discharge. When a charger having 0V battery start charging charger voltage (V_{0CHA}) or higher is connected between B+ and B- pins, the charging control FET gate is fixed to VDD potential. When the voltage between the gate and the source of the charging control FET becomes equal to or higher than the turn-on voltage by the charger voltage, the charging control FET is turned on to start charging. At this time, the discharging control FET is off and the charging current flows through the internal parasitic diode in the discharging control FET. If the battery voltage becomes equal to or higher than the overdischarge release voltage (V_{DU}), the normal condition returns.

■ *TYPICAL APPLICATION*

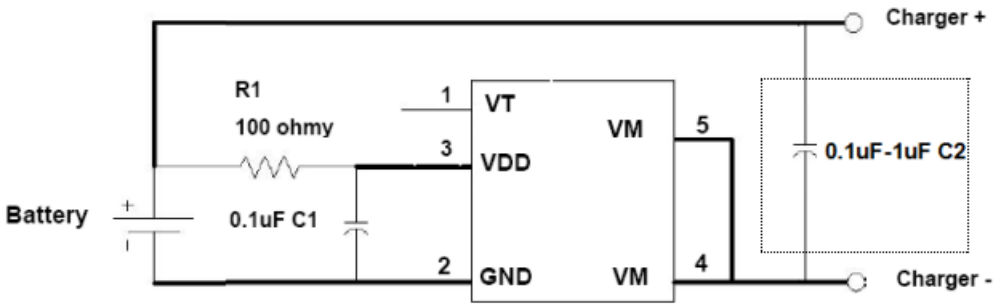

■ TIMING CHART

Overcharge and overdischarge detection

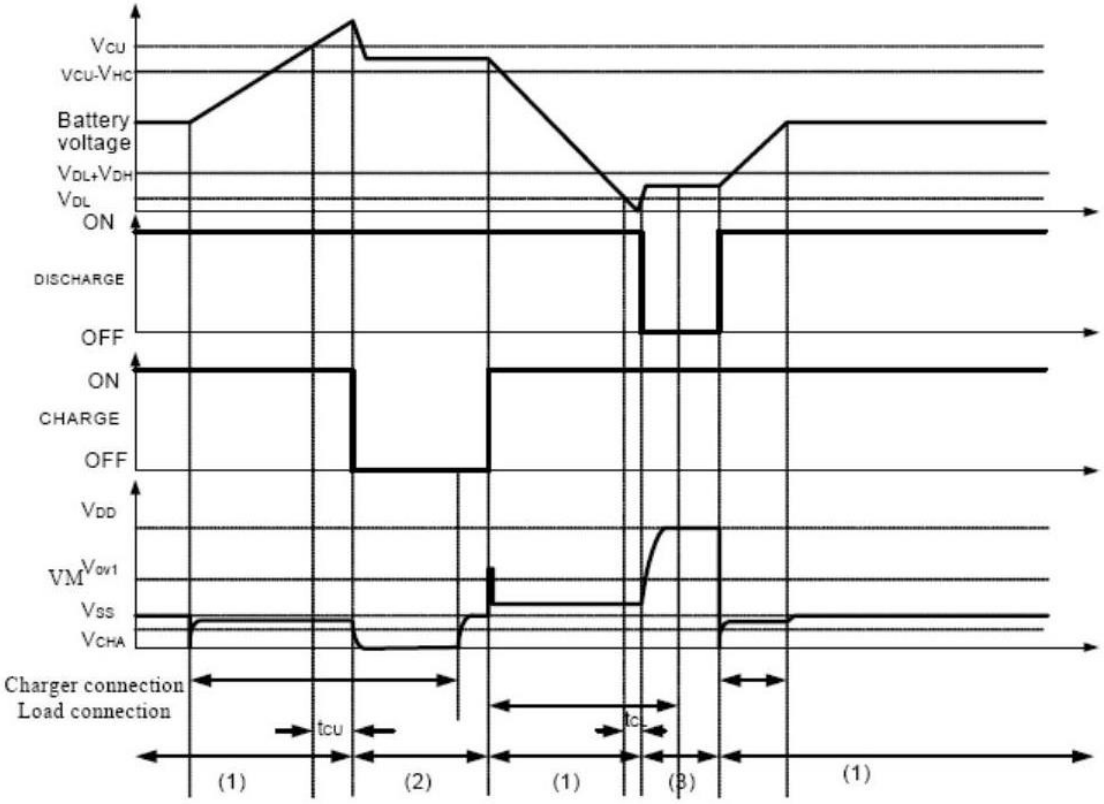

Overdischarge current detection

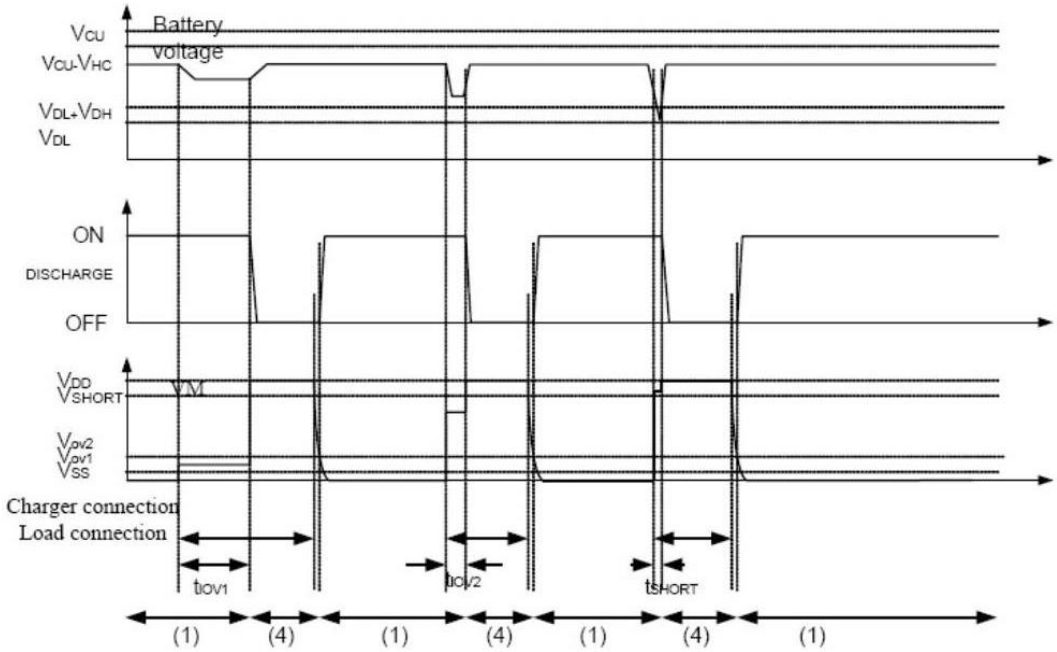

Charger Detection

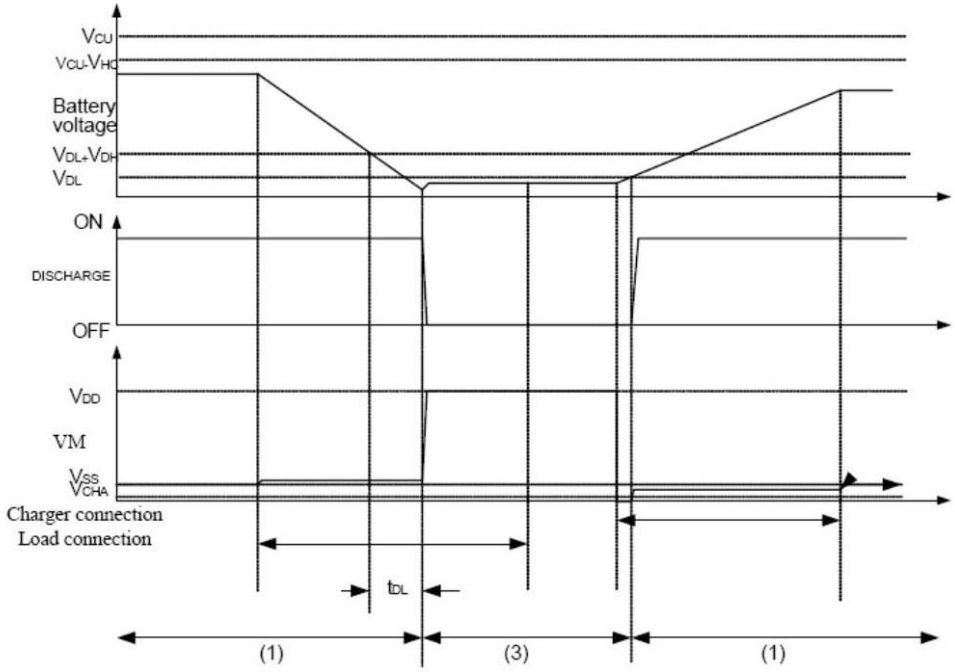

Abnormal Charger Detection

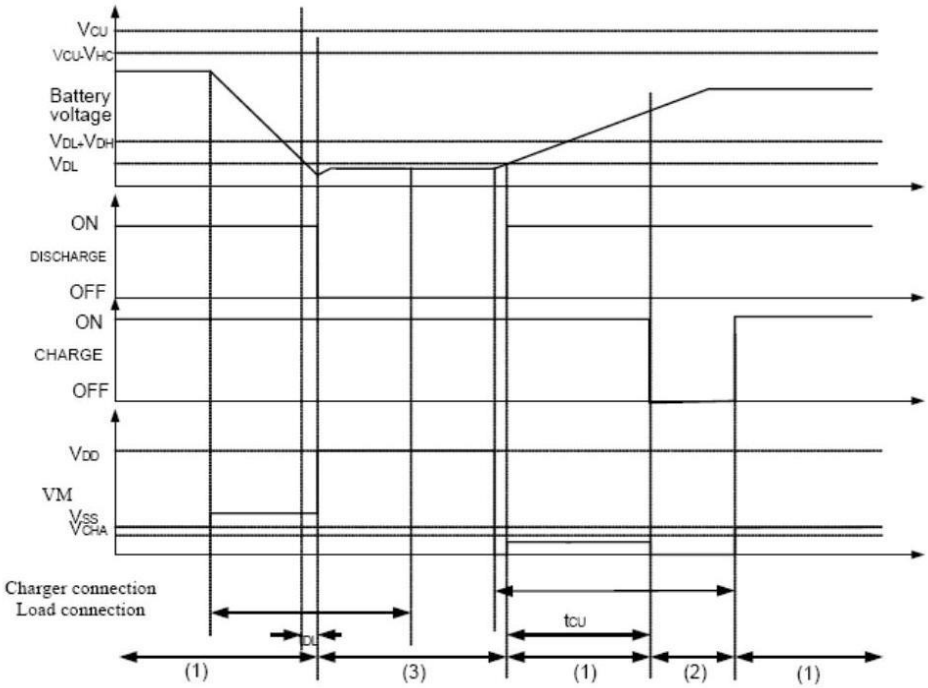

■ PACKAGE DIENSIONS

SOT-23 PACKAGE OUTLINE DIMENSIONS

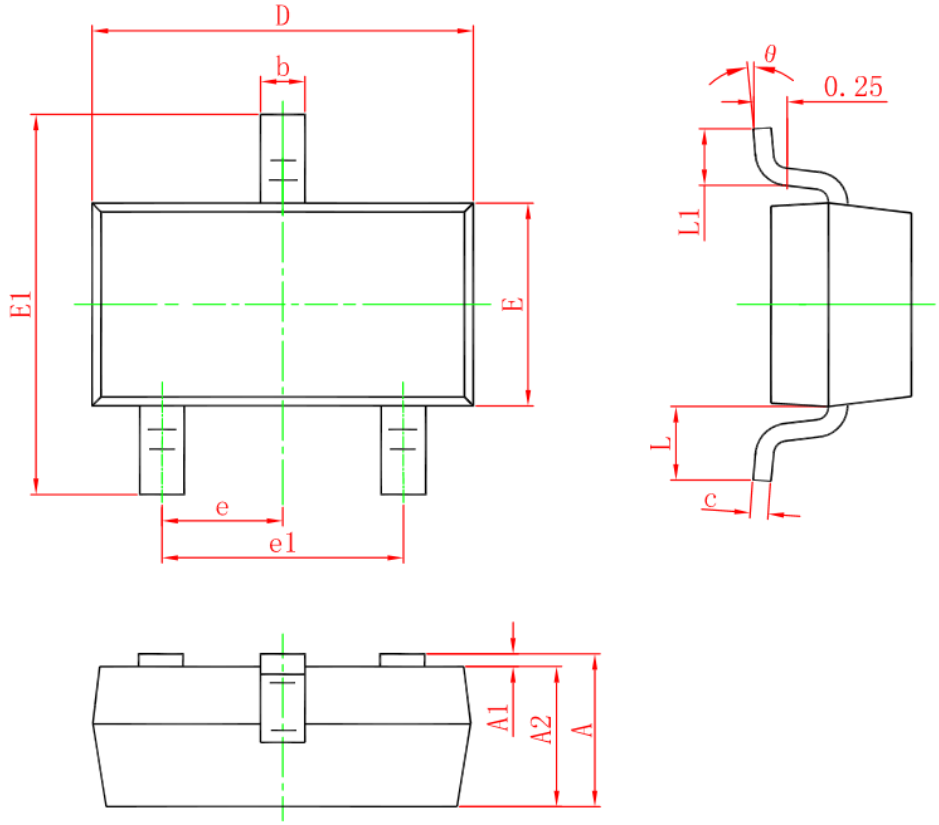

Symbol	Dimensions In Millimeters		Dimensions In Inches	
	Min.	Max.	Min.	Max.
A	0.900	1.150	0.035	0.045
A1	0.000	0.100	0.000	0.004
A2	0.900	1.050	0.035	0.041
b	0.300	0.500	0.012	0.020
c	0.080	0.150	0.003	0.006
D	2.800	3.000	0.110	0.118
E	1.200	1.400	0.047	0.055
E1	2.250	2.550	0.089	0.100
e	0.950 TYP.		0.037 TYP.	
e1	1.800	2.000	0.071	0.079
L	0.550 REF.		0.022 REF.	
L1	0.300	0.500	0.012	0.020
θ	0°	8°	0°	8°

TSOT-23-5L PACKAGE OUTLINE DIMENSIONS

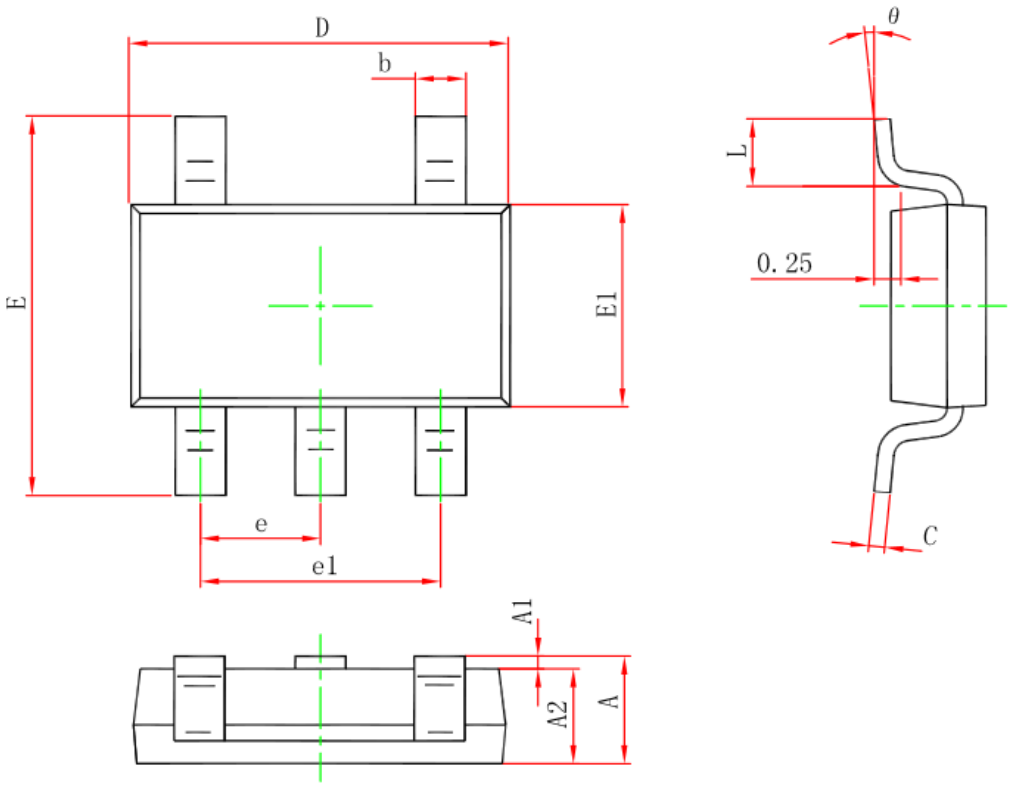

Symbol	Dimensions In Millimeters		Dimensions In Inches	
	Min	**Max**	**Min**	**Max**
A	---	0.900	---	0.035
A1	0.020	0.090	0.001	0.004
A2	0.700	0.800	0.028	0.031
b	0.350	0.500	0.014	0.020
c	0.080	0.200	0.003	0.008
D	2.820	3.020	0.111	0.119
E1	1.600	1.700	0.063	0.067
E	2.650	2.950	0.104	0.116
e	0.95（BSC）		0.037(BSC)	
e1	1.90（BSC）		0.075(BSC)	
L	0.300	0.600	0.012	0.024
θ	0°	8°	0°	8°

DFNWB2×2-6L-F(P0.65T0.50/0.55/0.60) PACKAGE OUTLINE DIMENSIONS

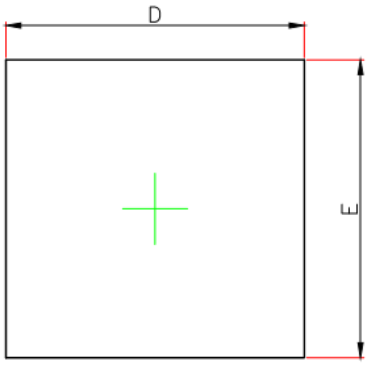

TOP VIEW

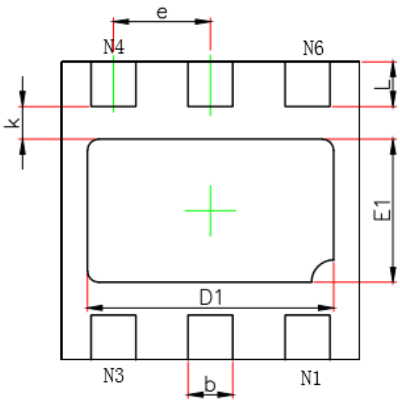

BOTTOM VIEW

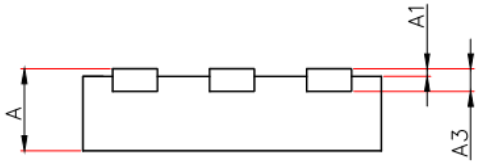

SIDE VIEW

Symbol	Dimensions In Millimeters		Dimensions In Inches	
	Min.	Max.	Min.	Max.
A	0.450/0.500/0.550	0.550/0.600/0.650	0.018/0.020/0.022	0.022/0.024/0.026
A1	0.000	0.050	0.000	0.002
A3	0.700	0.800		
A3	0.152REF.		0.006REF.	
D	1.924	2.076	0.076	0.082
E	1.924	2.076	0.075	0.083
D1	1.550	1.750	0.061	0.069
E1	0.860	1.060	0.034	0.042
k	0.200MIN.		0.008MIN.	
b	0.250	0.350	0.007	0.012
e	0.650TYP.		0.026TYP.	
L	0.224	0.376	0.009	0.015

■ SOLDERING METHODS FOR UNIVERCHIP

Storage environment Temperature=10℃~35℃ Humidity=65%±15%

Reflow soldering of surface mount device

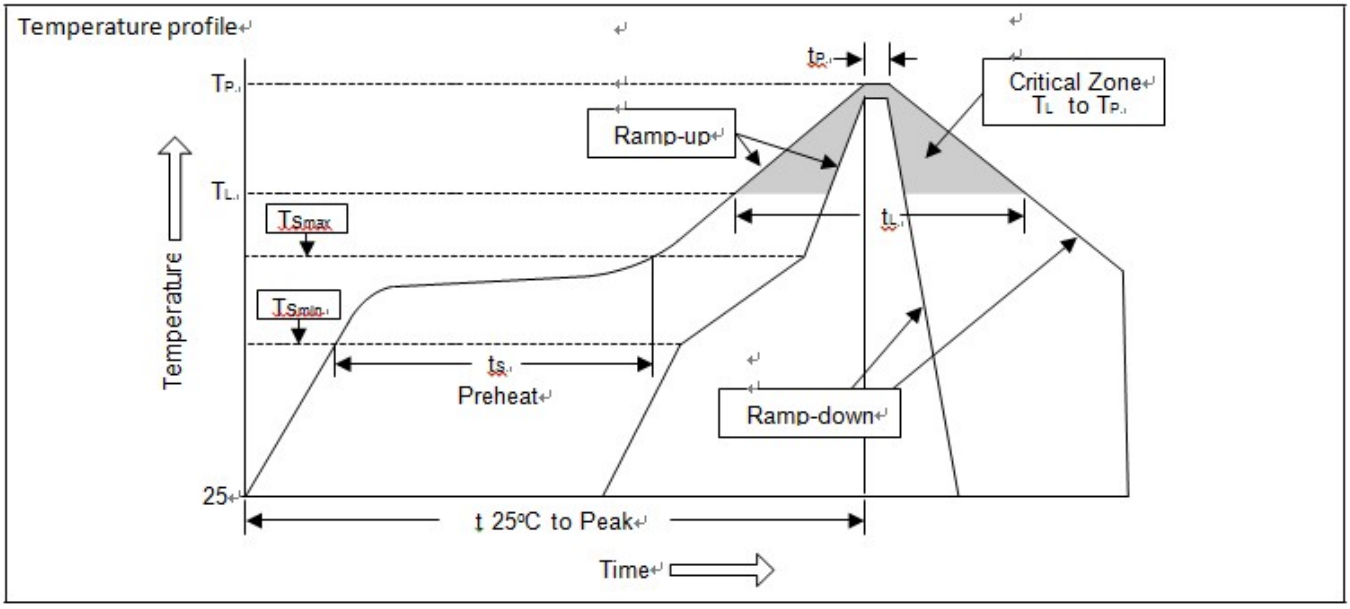

Profile Feature	Sn-Pb Eutectic Assembly	Pb free Assembly
Average ramp-up rate (T_L to T_P)	<3℃/sec	<3℃/sec
Preheat -Temperature Min (Ts_{min}) -Temperature Max (Ts_{max}) -Time (min to max) (ts)	 100℃ 150℃ 60~120 sec	 150℃ 200℃ 60~180 sec
Tsmax to T_L -Ramp-up Rate	<3℃/sec	<3℃/sec
Time maintained above -Temperature (T_L) -Time (t_L)	 183℃ 60~150 sec	 217℃ 60~150 sec
Peak Temperature (T_P)	240℃+0/-5℃	260℃+0/-5℃
Time within 5℃ of actual Peak Temperature (t_P)	10~30 sec	20~40 sec
Ramp-down Rate	<6℃/sec	<6℃/sec
Time 25℃ to Peak Temperature	<6 minutes	<6 minutes

Flow (wave) soldering (solder dipping)

Product	Peak Temperature	Dipping Time
Pb device	245℃±5 ℃	5sec±1sec
Pb-Free device	260℃+0/-5℃	5sec±1sec

This integrated circuit can be damaged by ESD UniverChip Corporation recommends that all integrated circuits be handled with appropriate precautions. Failure to observe proper handling and installation procedure can cause damage. ESD damage can range from subtle performance degradation to complete device failure. Precision integrated circuits may be more susceptible to damage because very small parametric changes could cause the device not to meet its published specifications.