Leiditech

MKT3412AB

1-Line Bi-directional TVS Diode

Features

- Ultra small package: 1.0x0.6x0.5mm
- Ultra low capacitance: 15pF typical
- Ultra low leakage: nA level
- Low operating voltage: 5V
- Low clamping voltage
- 2-pin leadless package
- Complies with following standards:
  - IEC 61000-4-2 (ESD) immunity test
    - Air discharge: ±30kV
    - Contact discharge: ±30kV
  - IEC61000-4-5 (Lightning) 6A (8/20μs)
- RoHS Compliant

Dimensions DFN1006

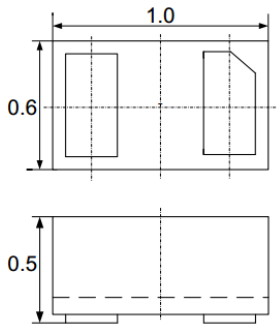

Pin Configuration

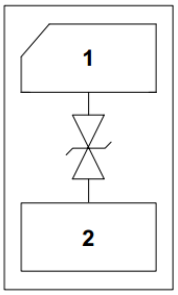

Applications

- Cellular Handsets and Accessories
- Personal Digital Assistants
- Notebooks and Handhelds
- Portable Instrumentation
- Digital Cameras
- Peripherals
- Audio Players
- Keypads, Side Keys, LCD Displays

Mechanical Characteristics

- Package: DFN1006
- Lead Finish: Lead Free
- UL Flammability Classification Rating 94V-0
- Quantity Per Reel:10,000pcs
- Reel Size:7 inch

Absolute Maximum Ratings(Tamb=25°C unless otherwise specified)

Parameter	Symbol	Value	Unit
Peak Pulse Power (8/20μs)	Ppp	80	W
ESD per IEC 61000−4−2 (Air)	V_{ESD}	±30	Kv
ESD per IEC 61000−4−2 (Contact)		±30	
Operating Temperature Range	T_J	-55 to +125	℃
Storage Temperature Range	T_{STJ}	-55 to +150	℃

Download from alldatasheet.com

Electrical Characteristics(TA=25°C unless otherwise specified)

Part Number	Device Marking	V_{RWM} (V)	V_{BR} (V)	I_T (mA)	V_C @1A	Vc		I_R μA (Max)	C (Pf) (Typ.)
						(Max)	(@A)		
MKT3412AB	B2	5	6	1	7.5	12.5	6	0.5	15

Download from alldatasheet.com

Typical Performance Characteristics (T_A=25°C unless otherwise Specified)

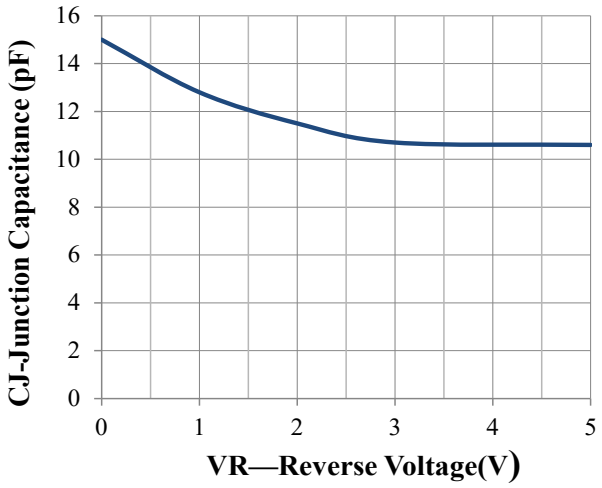

Junction Capacitance vs. Reverse Voltage

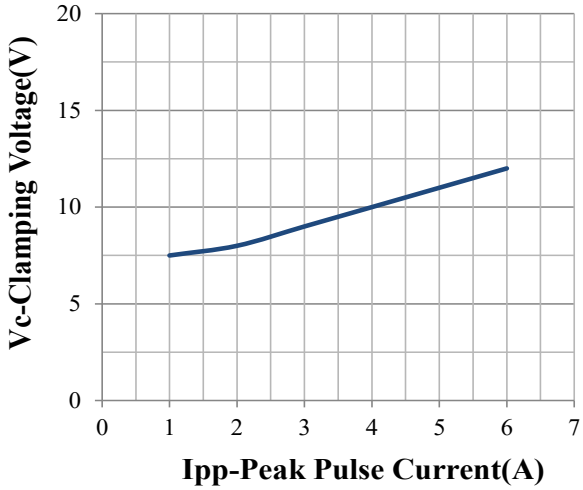

Clamping Voltage vs. Peak Pulse Current

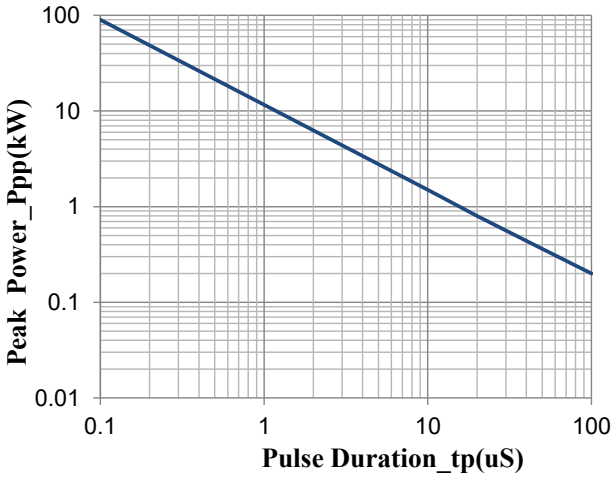

Peak Pulse Power vs. Pulse Time

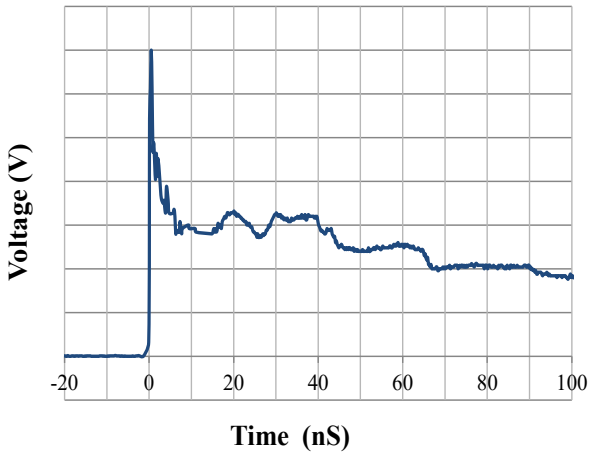

IEC61000−4−2 Pulse Waveform

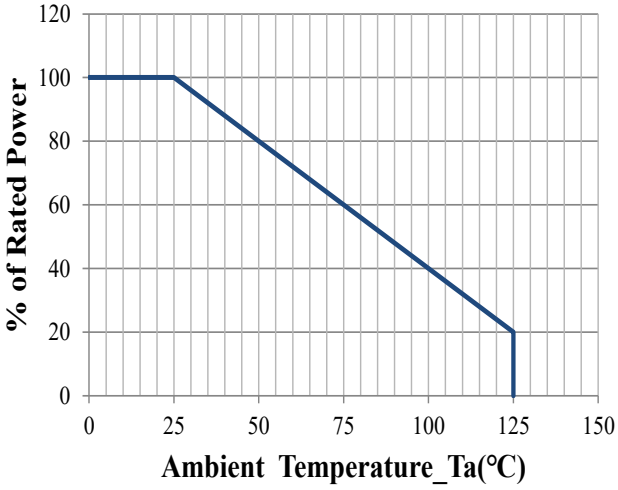

Power Derating Curve

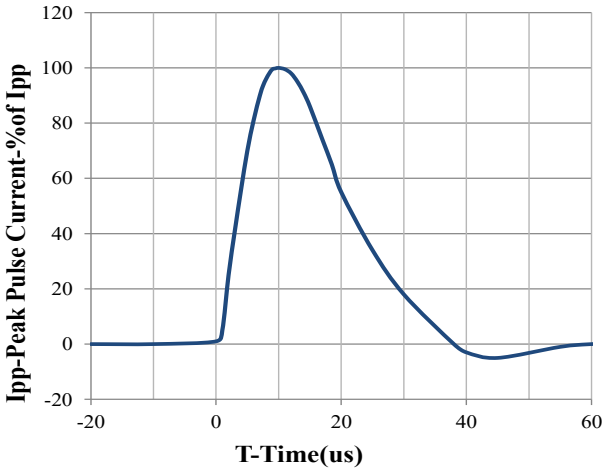

8 X 20us Pulse Waveform

Download from alldatasheet.com

DFN1006 Package Outline Drawing

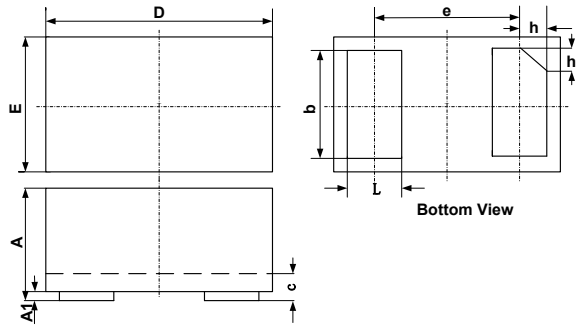

SYM	DIMENSIONS					
	MILLIMETERS			INCHES		
	MIN	NOM	MAX	MIN	NOM	MAX
A	0.45	0.50	0.55	0.018	0.020	0.022
A1	0.00	0.02	0.05	0.000	0.001	0.002
b	0.45	0.50	0.55	0.018	0.020	0.022
c	0.12	0.15	0.18	0.005	0.006	0.007
D	0.95	1.00	1.05	0.037	0.039	0.041
e	0.65 BSC			0.026 BSC		
E	0.55	0.60	0.65	0.022	0.024	0.026
L	0.20	0.25	0.30	0.008	0.010	0.012
h	0.07	0.12	0.17	0.003	0.005	0.007

Suggested Land Pattern

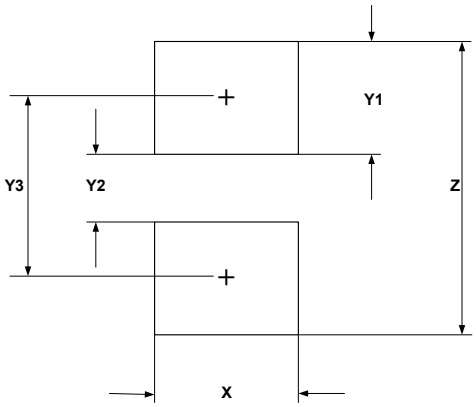

SYM	DIMENSIONS	
	MILLIMETERS	INCHES
X	0.60	0.024
Y1	0.50	0.020
Y2	0.30	0.012
Y3	0.80	0.032
Z	1.30	0.052

Shanghai Leiditech Electronic Co.,Ltd
Email: sale1@leiditech.com
Tel : +86- 021 50828806
Fax : +86- 021 50477059

Download from alldatasheet.com