LM2576/LM2576HV Series
SIMPLE SWITCHER® 3A Step-Down Voltage Regulator

General Description

The LM2576 series of regulators are monolithic integrated circuits that provide all the active functions for a step-down (buck) switching regulator, capable of driving 3A load with excellent line and load regulation. These devices are available in fixed output voltages of 3.3V, 5V,12V,15V and an adjustable output version.

Requiring a minimum number of external components, these regulators are simple to use and include internal frequency compensation and a fixed-frequency oscillator.
The LM2576 series offers a high-efficiency replacement for popular three-terminal linear regulators. It substantially reduces the size of the heat sink, and in some cases no heat sink is required.

A standard series of inductors optimized for use with the LM2576 are available from several different manufacturers. The feature greatly simplifies the design of switch- mode power supplies.

Other features include a guaranteed ±4% tolerance on output voltage within specified input voltages and output load conditions, and ±10% on the oscillator frequency. External shutdown is included, featuring 50 μA (typical) standby current. The output switch includes cycle-by-cycle current limiting, as well as thermal shutdown for full protection under fault conditions.

Features

- 3.3V, 5V, 12V, 15V, and adjustable output versions
- Adjustable version output voltage range,1.23V to 37V (57V for HV version) ±4% max over line and load conditions
- Guaranteed 3A output current
- Wide input voltage range, 40V up to 60V for HV version
- Requires only 4 external components
- 52 KHz fixed frequency internal oscillator
- TTL shutdown capability, low power standby mode
- High efficiency
- Uses readily available standard inductors
- Thermal shutdown and current limit protection
- P+ Product Enhancement tested

Applications

- Simple high-efficiency step-down (buck) regulator
- Efficient pre-regulator for linear regulators
- On-card switching regulators
- Positive to negative converter (Buck-Boost)

Typical Application (Fixed Output Voltage Versions)

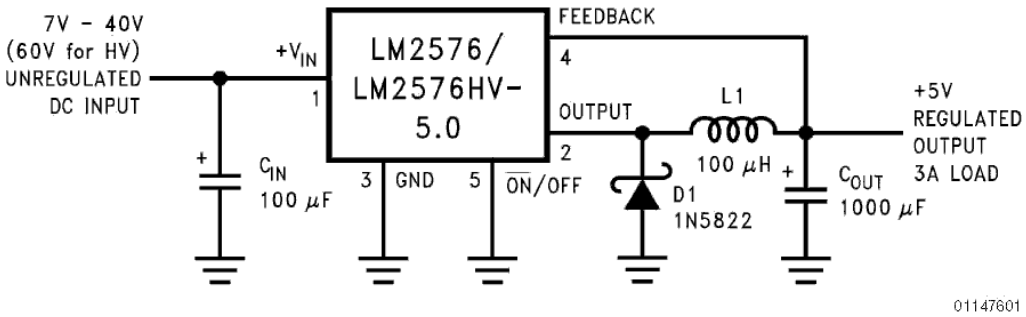

FIGURE 1.

Block Diagram

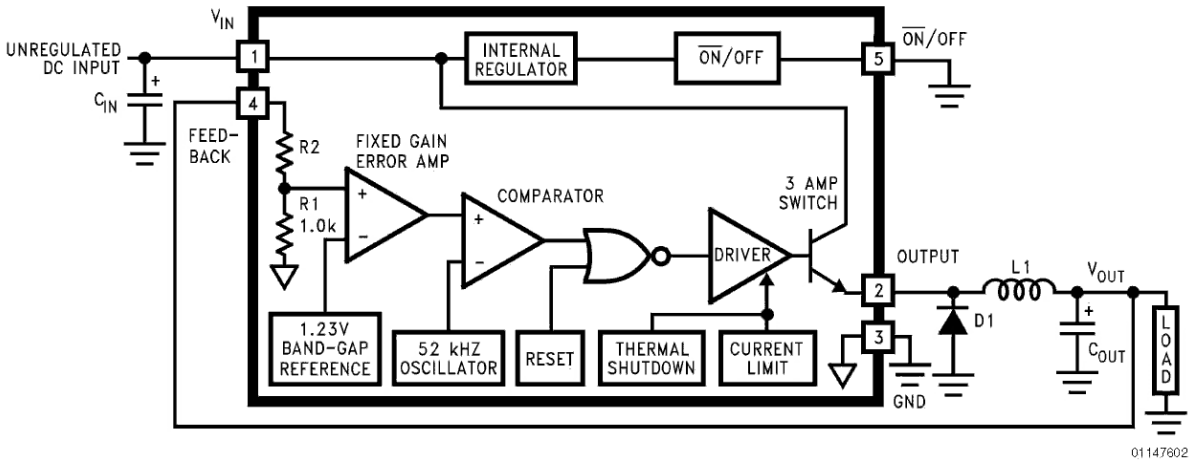

3.3V R2=1.7K
5V, R2=3.1K
12V, R2=8.84K
15V, R2=11.3K
For ADJ. Version
R1=Open, R2=0Ω
Patent Pending

Ordering Information

Temperature Range	Output Voltage					NS Package Number	Package Type
	3.3	5.0	12	15	ADJ		
-40°C ≤ T_A ≤125°C	LM2576HVS-3.3	LM2576HVS-5.0	LM2576HVS-12	LM2576HVS-15	LM2576HVS-ADJ	TS5B	TO-263
	LM2576S-3.3	LM2576S-5.0	LM2576S-12	LM2576S-15	LM2576S-ADJ		
	LM2576HVSX-3.3	LM2576HVSX-5.0	LM2576HVSX-12	LM2576HVSX-15	LM2576HVSX-ADJ	TS5B Tape & Reel	
	LM2576SX-3.3	LM2576SX-5.0	LM2576SX-12	LM2576SX-15	LM2576SX-ADJ		
	LM2576HVT-3.3	LM2576HVT-5.0	LM2576HVT-12	LM2576HVT-15	LM2576HVT-ADJ	T05A	TO-220
	LM2576T-3.3	LM2576T-5.0	LM2576T-12	LM2576T-15	LM2576T-ADJ		
	LM2576HVT-3.3 Flow LB03	LM2576HVT-5.0 Flow LB03	LM2576HVT-12 Flow LB03	LM2576HVT-15 Flow LB03	LM2576HVT-ADJ Flow LB03	T05D	
	LM2576T-3.3 Flow LB03	LM2576T-5.0 Flow LB03	LM2576T-12 Flow LB03	LM2576T-15 Flow LB03	LM2576T-ADJ Flow LB03		

Absolute Maximum Ratings (Note 1)

If Military/Aerospace specified devices are required, please contact the National Semiconductor Sales Office/Distributors for availability and specifications.

Maximum Supply Voltage	
LM2576	45V
LM2576HV	63V
$\overline{ON}$/OFF Pin Input Voltage	$-0.3V \leq V \leq +V_{IN}$
Output Voltage to Ground (Steady State)	-1V
Power Dissipation	Internally Limited
Storage Temperature Range	-65°C to +150°C
Maximum Junction Temperature	150°C
Minimum ESD Rating (C =100pF, R=1.5KΩ)	2KV
Lead Temperature (Soldering, 10 Seconds)	260°C

Operating Ratings

Temperature Range	
LM2576/LM2576HV	$-40°C \leq T_J \leq +125°C$
Supply Voltage	
LM2576	40V
LM2576HV	60V

LM2576-3.3, LM2576HV-3.3
Electrical Characteristics

Specifications with standard type face are for T_J=25°C, and those with boldface type apply over full Operating Temperature Range.

Symbol	Parameter	Conditions	LM2576-3.3 LM2576HV-3.3		Units(limits)
			Typ	Limit (Note 2)	
SYSTEM PARAMETERS (Note 3) Test Circuit Figure 2					
V_{OUT}	Output Voltage	V_{IN}=12V, I_{LOAD}=0.5A Circuit of *Figure 2*	3.3	 3.234 3.366	V V(Min) V(Max)
V_{OUT}	Output Voltage LM2576	$6V \leq V_{IN} \leq 40V$,$0.5A \leq I_{LOAD} \leq 3A$ Circuit of *Figure 2*	3.3	 3.168/3.135 3.432/3.465	V V(Min) V(Max)
V_{OUT}	Output Voltage LM2576HV	$6V \leq V_{IN} \leq 60V$, $0.5A \leq I_{LOAD} \leq 3A$ Circuit of *Figure 2*	3.3	 3.168/3.135 3.450/3.482	V V(Min) V(Max)
η	Efficiency	V_{IN}=12V, I_{LOAD}=3A	75		%

LM2576-5.0, LM2576HV-5.0
Electrical Characteristics

Specifications with standard type face are for T_J=25°C, and those with *Figure 2* boldface type apply over full Operating Temperature Range.

Symbol	Parameter	Conditions	LM2576-5.0 LM2576HV-5.0		Units(limits)
			Typ	Limit (Note 2)	
SYSTEM PARAMETERS (Note 3) Test Circuit Figure 2					
V_{OUT}	Output Voltage	V_{IN}=12V, I_{LOAD}=0.5A Circuit of *Figure 2*	5.0	 4.900 5.100	V V(Min) V(Max)
V_{OUT}	Output Voltage LM2576	$0.5A \leq I_{LOAD} \leq 3A$, $8V \leq V_{IN} \leq 40V$ Circuit of *Figure 2*	5.0	 4.800/4.750 5.200/5.250	V V(Min) V(Max)
V_{OUT}	Output Voltage LM2576HV	$0.5A \leq I_{LOAD} \leq 3A$, $8V \leq V_{IN} \leq 60V$ Circuit of *Figure 2*	5.0	 4.800/4.750 5.225/5.275	V V(Min) V(Max)
η	Efficiency	V_{IN}=12V, I_{LOAD}=3A	77		%

LM2576-12, LM2576HV-12
Electrical Characteristics
Specifications with standard type face are for T_J=25°C, and those with boldface type apply over full Operating Temperature Range.

Symbol	Parameter	Conditions	LM2576-12 LM2576HV-12		Units(limits)
			Typ	Limit(Note2)	
SYSTEM PARAMETERS (Note 3) Test Circuit Figure 2					
V_{OUT}	Output Voltage	V_{IN}=25V, I_{LOAD}=0.5A Circuit of *Figure 2*	12	 11.76 12.24	V V(Min) V(Max)
V_{OUT}	Output Voltage LM2576	0.5A≤I_{LOAD}≤3A 15V≤V_{IN}≤40V Circuit of *Figure 2*	12	 11.52/11.40 12.48/12.60	V V(Min) V(Max)
V_{OUT}	Output Voltage LM2576HV	0.5A≤I_{LOAD}≤3A, 15V≤V_{IN}≤60V Circuit of *Figure 2*	12	 11.54/11.40 12.54/12.66	V V(Min) V(Max)
η	Efficiency	V_{IN}=15V, I_{LOAD}=3A	88		%

LM2576-15, LM2576HV-15
Electrical Characteristics
Specifications with standard type face are for T_J=25°C, and those with boldface type apply over full Operating Temperature Range.

Symbol	Parameter	Conditions	LM2576-15 LM2576HV-15		Units(limits)
			Typ	Limit(Note2)	
SYSTEM PARAMETERS (Note 3) Test Circuit Figure 2					
V_{OUT}	Output Voltage	V_{IN}=25V, I_{LOAD}=0.5A Circuit of *Figure 2*	15	 14.70 15.30	V V(Min) V(Max)
V_{OUT}	Output Voltage LM2576	0.5A≤I_{LOAD}≤3A 18V≤V_{IN}≤40V Circuit of *Figure 2*	15	 14.40/14.25 15.60/15.75	V V(Min) V(Max)
V_{OUT}	Output Voltage LM2576HV	0.5A≤I_{LOAD}≤3A, 18V≤V_{IN}≤60V Circuit of *Figure 2*	15	 14.40/14.25 15.68/15.83	V V(Min) V(Max)
η	Efficiency	V_{IN}=18V, I_{LOAD}=3A	88		%

LM2576-ADJ, LM2576HV-ADJ
Electrical Characteristics

Specifications with standard type face are for T_J=25°C, and those with boldface type apply over full Operating Temperature Range.

Symbol	Parameter	Conditions	LM2576-ADJ LM2576HV-ADJ		Units(limits)
			Typ	Limit(Note2)	
SYSTEM PARAMETERS (Note 3) Test Circuit Figure 2					
V_{OUT}	Feedback Voltage	V_{IN}=12V, I_{LOAD}=0.5A V_{OUT}=5V Circuit of *Figure 2*	1.230	 1.217 1.243	V V(Min) V(Max)
V_{OUT}	Feedback Voltage LM2576	0.5A≤I_{LOAD}≤3A 8V≤V_{IN}≤40V V_{OUT}=5V,Circuit of *Figure 2*	1.230	 1.193/1.180 1.267/1.280	V V(Min) V(Max)
V_{OUT}	Feedback Voltage LM2576HV	0.5A≤I_{LOAD}≤3A, 8V≤V_{IN}≤60V V_{OUT}=5V,Circuit of *Figure 2*	1.230	 1.193/1.180 1.273/1.286	V V(Min) V(Max)
η	Efficiency	V_{IN}=12V, I_{LOAD}=3A, V_{OUT}=5V	77		%

All Output Voltage Versions
Electrical Characteristics

Specifications with standard type face are for T_J=25°C, and those with boldface type apply over full Operating Temperature Range. Unless otherwise specified, V_{IN}=12V for the 3.3V, 5V, and Adjustable version, V_{IN}=25V for the 12V version, and V_{IN}=30V for the 15V version. I_{LOAD}=500mA

Symbol	Parameter	Conditions	LM2576-XX LM2576HV-XX		Units(limits)
			Typ	Limit(Note2)	
DEVICE PARAMETERS					
I_b	Feedback Bias Current	V_{OUT}=5V(Adjustable Version Only)	50	100/500	nA
f_O	Oscillator Frequency	(Note 11)	52	 47/42 58/63	kHz kHz (Min) kHz (Max)
V_{SAT}	Saturation Voltage	I_{OUT}=3A (Note 4)	1.4	 1.8/2.0	V V(Max)
DC	Max Duty Cycle (ON)	(Note 5)	98	 93	% %(Min)
I_{CL}	Current Limit	(Note 4,11)	5.8	 4.2/3.5 6.9/7.5	A A(Min) A(Max)
I_L	Output Leakage Current	(Note 6,7); Output = 0V Output=-1V Output=-1V	 7.5	2 30	mA(Max) mA mA(Max)
I_Q	Quiescent Current	(Note 6)	5	 10	mA mA(Max)
I_{STBY}	Standby Quiescent Current	$\overline{ON}$/OFF Pin =5V(OFF)	50	 200	μA μA(Max)
θ_{JA} θ_{JA} θ_{JC} θ_{JA}	Thermal Resistance	T Package, Junction to Ambient (Note 8) T Package, Junction to Ambient (Note 9) T Package, Junction to Case S Package, Junction to Ambient (Note 10)	65 45 2 50		°C/W
$\overline{ON}$/OFF CONTROL Test Circuit *Figure2*					
V_{IH}	$\overline{ON}$/OFF Pin Logic Input Level	V_{OUT}=30V	1.4	2.2/2.4	V(Min)
V_{IL}		V_{OUT}=Nominal Output Voltage	1.2	1.0/0.8	V(Max)
I_{IH}	$\overline{ON}$/OFF Pin Input Current	$\overline{ON}$/OFF Pin=5V (OFF)	12	 30	μA μA(Max)
I_{IL}		$\overline{ON}$/OFF Pin=0V (ON)	0	 10	μA μA(Max)

Note 1: Absolute maximum Ratings indicate limits beyond which damage to the device may occur. Operating Ratings indicate conditions for which the device is intended to be functional, but do not guarantee specific performance limits. For guaranteed specifications and test conditions, see the Electrical Characteristics.

Note 2: All limits guaranteed at room temperature (standard type face) and at temperature extremes (bold type face). All room temperature limits are 100% production tested. All limits at temperature extremes are guaranteed via correlation using standard Statistical Quality Control (SQC) methods.

Note 3: External components such as the catch diode, inductor, input and output capacitors can affect switching regulator system performance. When the Lm2576/LM2576HV is used as shown in the Figure 2 test circuit, system performance will be as shown in system parameters section of Electrical Characteristics.

Note 4: Output pin sourcing current. No diode , inductor or capacitor connected to output.

Note 5: Feedback pin removed from output and connected to 0V.

Note 6: Feedback pin removed from output and connected to +12V for the Adjustable, 3.3V, and 5V versions, and +25V for the 12V and 15V versions, to force the output transistor OFF.

Note 7: V_{IN}=40V (60V for high voltage version).

Note 8: Junction to ambient thermal resistance (no external heat sink) for the 5 lead TO-220 package mounted vertically, with $^1/_2$ inch leads in a socket, or on a PC board with minimum copper area.

Note 9: Junction to ambient thermal resistance (no external heat sink) for the 5 lead TO-220 package mounted vertically, with $^1/_4$ inch leads soldered to a PC board containing approximately 4 square inches of copper area surrounding the leads.

Note 10: If the TO-263 package is used, the thermal resistance can be reduced by increasing the PC board copper area thermally connected to the package. Using 0.5 square inches of copper area, θ_{JA} is 50°C/W, with 1 square inch of copper area, θ_{JA} is 37°C/W, and with 1.6 or more square inches of copper area, θ_{JA} is 32°C/W.

Note 11: The oscillator frequency reduces to approximately 11KHz in the event of and output short or an overload which causes the regulated output voltage to drop approximately 40% from the nominal output voltage. This self protection feature lowers the average power dissipation of the IC by lowering the minimum duty cycle from 5% down to approximately 2%.

Typical Performance Characteristics

(Circuit of Figure 2)

Normalized Output Voltage

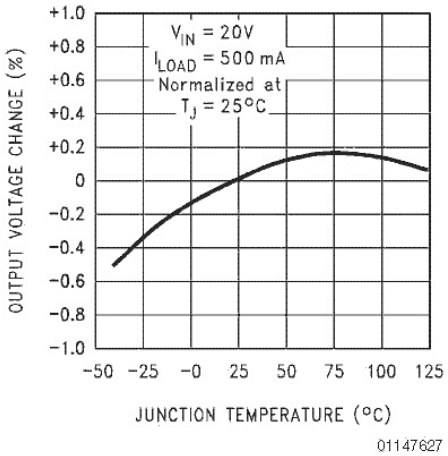

Line Regulation

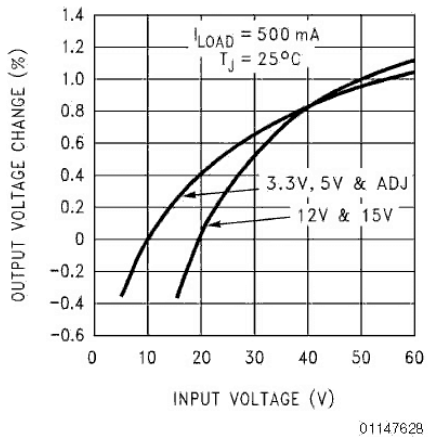

Typical Performance Characteristics (Circuit of Figure 2) (Continued)

Dropout Voltage

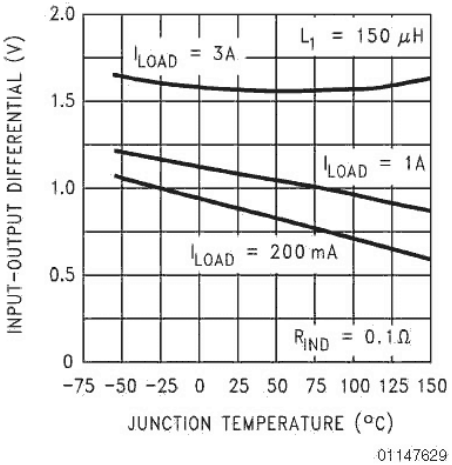

Current Limit

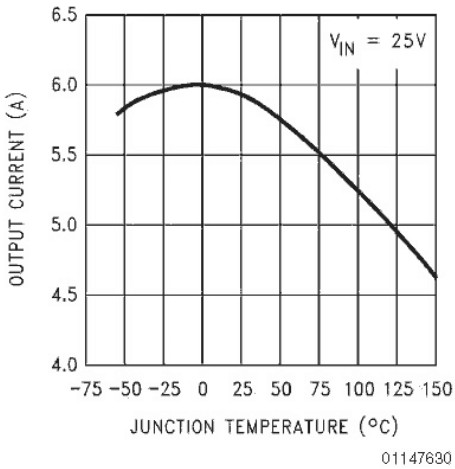

Quiescent Current

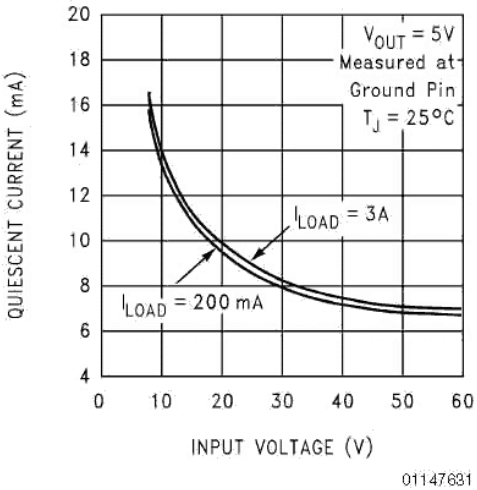

Standby Quiescent Current

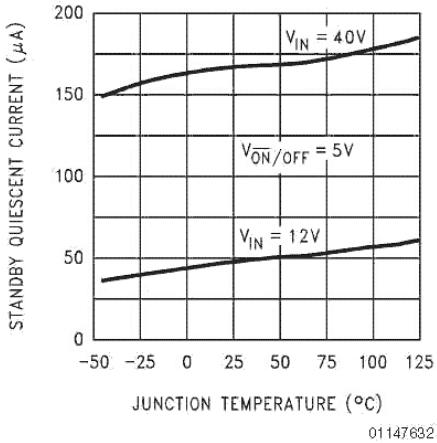

Oscillator Frequency

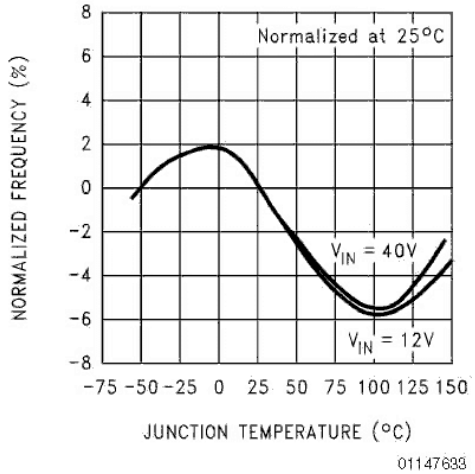

Switch Saturation Voltage

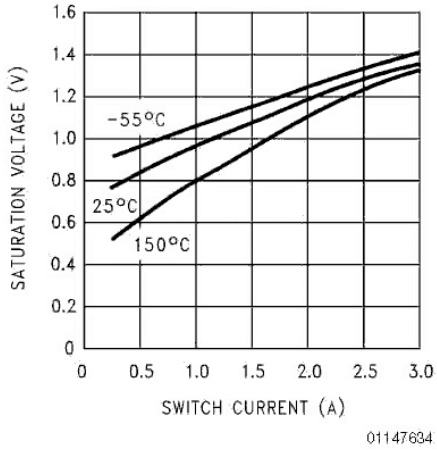

Typical Performance Characteristics (Circuit of Figure 2) (Continued)

Efficiency

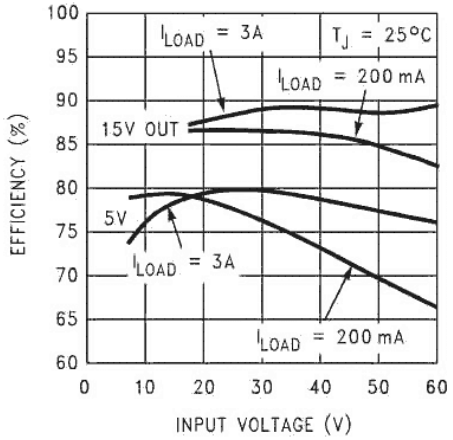

Minimum Operating Voltage

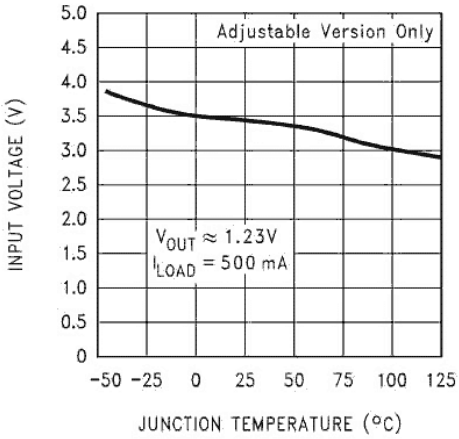

Quiescent Current vs Duty Cycle

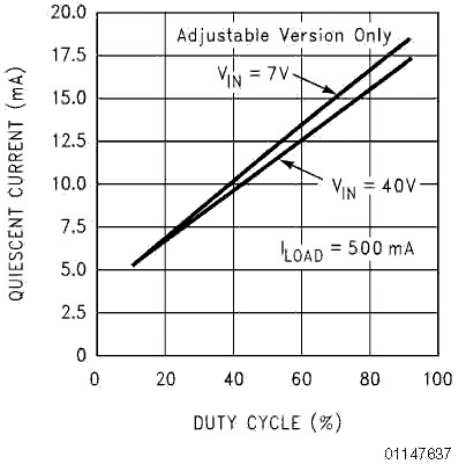

Feedback Voltage vs Duty Cycle

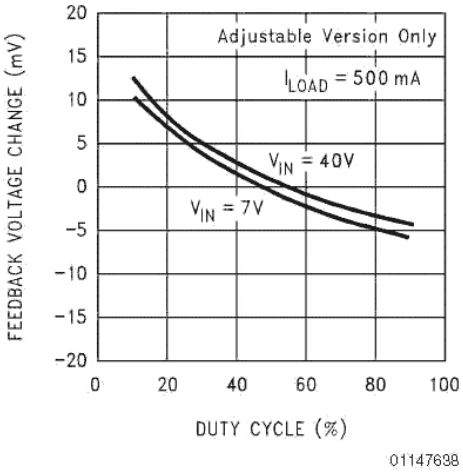

Minimum Operating Voltage

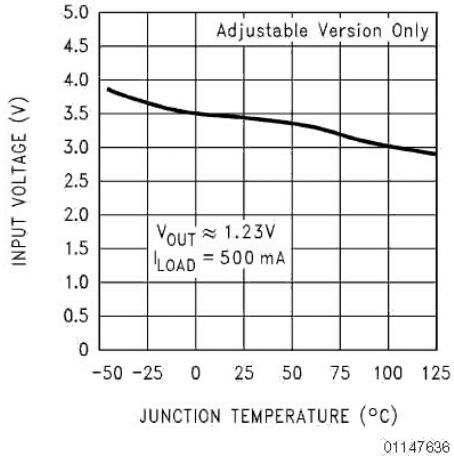

Quiescent Current vs Duty Cycle

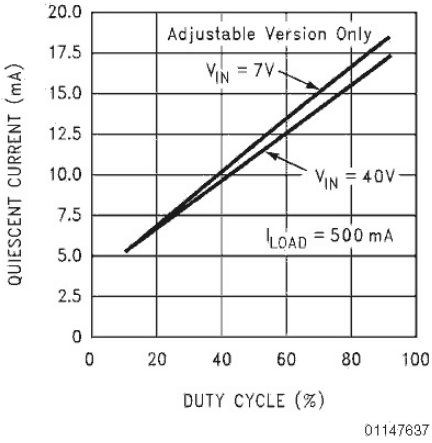

Typical Performance Characteristics (Circuit of *Figure 2*) (Continued)

Feedback Voltage Vs Duty Cycle

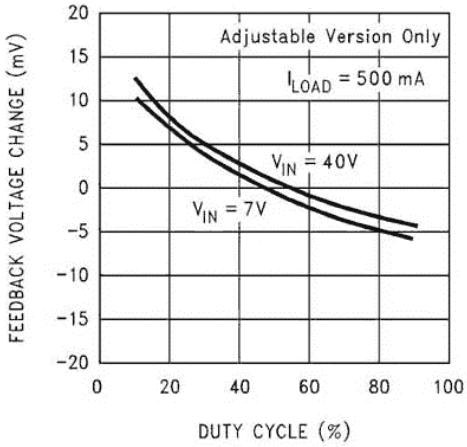

01147638

Feedback Pin Current

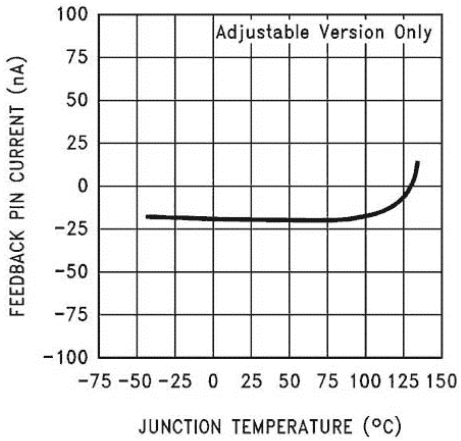

01147604

Maximum Power Dissipation (TO-263) (See Note 10)

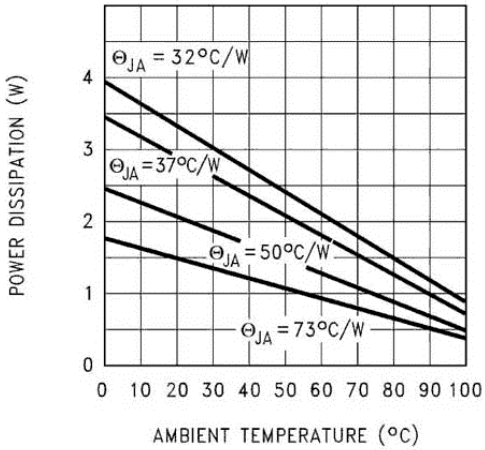

01147624

Switching Waveforms

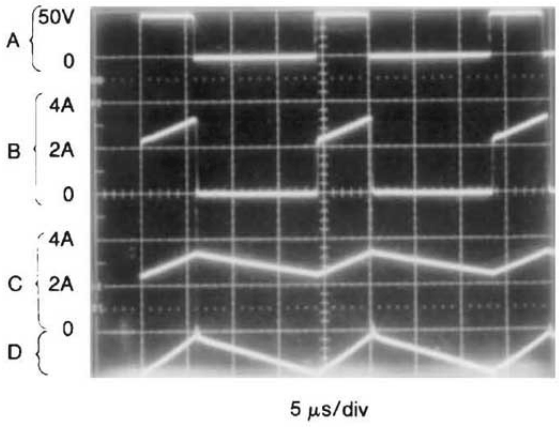

01147606

V_{OUT}=15V
A: Output Pin Voltage, 50V/div
B: Output Pin Current, 2A/div
C: Inductor Current, 2A/div
D: Output Ripple Voltage, 50mV/div.
AC-Coupled.
Horizontal Time Base: 5 µs/div

Load Transient Response

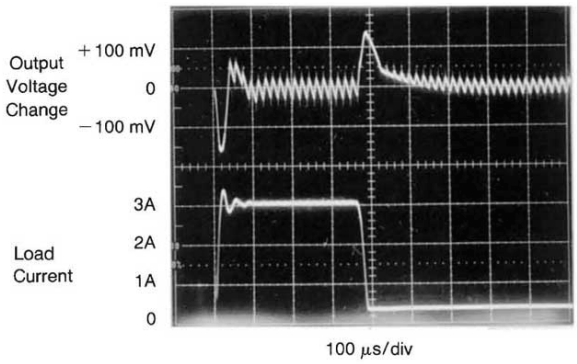

01147605

Test Circuit and Layout Guidelines

As in any switching regulator, layout is very important. Rapidly switching currents associated with wiring inductance generate voltage transients which can cause problems. For minimal inductance and ground loops, the length of the leads indicated by heavy lines should be kept as short as possible. Single-point grounding (as indicated) or ground plane construction should be used for best results. When using the Adjustable version. Physically locate the programming resistors near the regulator, to keep the sensitive feedback wiring short.

Fixed Output Voltage Versions

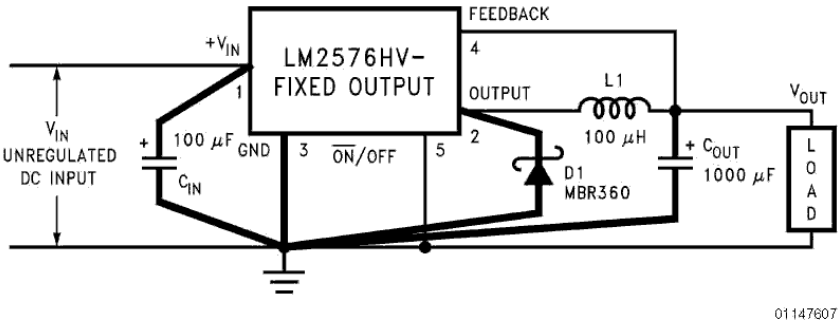

C_{IN} -----100 µ F, 75V, Aluminum Electrolytic
C_{OUT} -----1000 µ F, 25V, Aluminum Electrolytic
D_1 ----- Schottky, MBR360
L_1 ----- 100 µ H, Pulse Eng. PE-92108
R_1 ----- 2K, 0.1%
R_2 ----- 6.12K, 0.1%

Adjustable Output Voltage Version

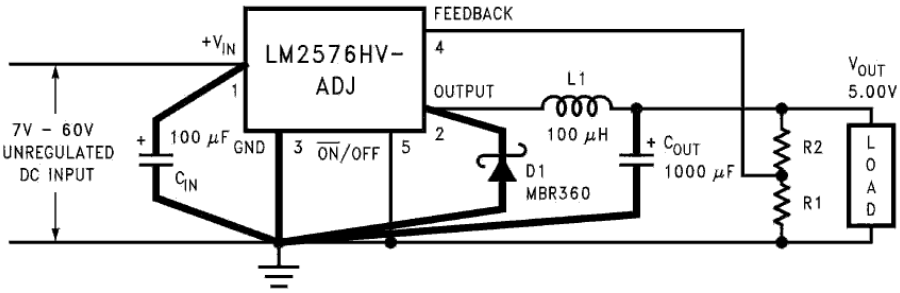

$$V_{OUT} = V_{REF}\left(1 + \frac{R_2}{R_1}\right)$$

$$R_2 = R_1\left(\frac{V_{OUT}}{V_{REF}} - 1\right)$$

where V_{REF} = 1.23V, R1 between 1K and 5K.

FIGURE2

LM2576 Series Buck Regulator Design Procedure	
PROCEDURE (Fixed Output Voltage versions)	**EXAMPLE (Fixed Output Voltage Versions)**
Given: V_{OUT} = Regulated Output Voltage (3.3V, 5V, 12V, or 15V) V_{IN}(Max) = Maximum Input Voltage L_{LOAD}(Max)=Maximum Load Current 1. **Inductor Selection (L1) A.** Select the correct Inductor value selection guide from *Figures 3,4,5 or Figure 6*.(Output voltages of 3.3V, 5V, 12V or 15V respectively). For other output voltages, see the design procedure for the adjustable version. **B.** From the inductor value selection guide, identify the inductance region intersected by V_{IN}(Max) and L_{LOAD}(Max), and note the inductor code for that region. **C.** Identify the inductor value from the inductor code, and select an appropriate inductor from the table shown in *Figure3*. Part numbers are listed for three inductor manufacturers. The inductor chosen must be rated for operation at the LM2576 switching frequency (52 KHz) and for a current rating of 1.15 X L_{LOAD}. For additional inductor information, see the inductor section in the Application Hints section of this data sheet. 2. **Output Capacitor Selection (C_{OUT}) A.** The value of the output capacitor together with the inductor defines the dominate pole-pair of the switching regulator loop. For stable operation and an acceptable output ripple voltage, (approximately 1% of the output voltage) a value between 100μF and 470μF is recommended. **B.** The capacitor's voltage rating should be at least 1.5 times greater than the output voltage. For a 5V regulator, a rating of at least 8V is appropriate, and a 10V or 15V rating is recommended. Higher voltage electrolytic capacitors generally have lower ESR numbers, and for this reason it may be necessary to select a capacitor rated for a higher voltage than would normally be needed. 3. **Catch Diode Selection (D1) A.** The catch-diode current rating must be at least 1.2 times greater than the maximum load current. Also, if the power supply design must withstand a continuous output short, the diode should have a current rating equal to the maximum current limit of the LM2576. The most stressful condition for this diode is an overload or shorted output condition. **B.** The reverse voltage rating of the diode should be at least 1.25 times the maximum input voltage. 4. **Input Capacitor (C_{IN})** An aluminum or tantalum electrolytic bypass capacitor located close to the regulator is needed for stable operation.	**Given:** V_{OUT} =5V V_{IN}(Max) =15V L_{LOAD}(Max)=3A 1. **Inductor Selection (L1) A**. Use the selection guide shown in *Figure 4*, B. From the selection guide, the inductance area intersected by the 15V line and 3A line is L100. C. Inductor value required is 100μH. From the table in Figure 3. Choose AIE 415-0930. Pulse Engineering PE92108, or Renco RL2444. 2. **Output Capacitor Selection (C_{OUT}) A.** C_{OUT}=680μF to 2000μF standard aluminum electrolytic. **B.** Capacitor voltage rating=20V. 3. **Catch Diode Selection (D1) A.** For this example, a 3A current rating is adequate. B. Use a 20V 1N5823 or SR302 Schottky diode, or any of the suggested fast-recoverv diodes shown in *Figure8.* 4. **Input Capacitor (C_{IN})** A 100μF, 25V aluminum electrolytic capacitor located near the input and ground pins provides sufficient bypassing.

LM25756 Series Buck Regulator
Design Procedure (Continued)
INDUCTOR VALUE SELECTION GUIDES (For Continuous Mode Operation)

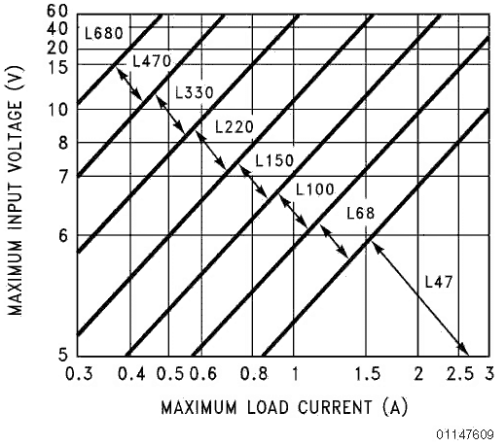

FIGURE 3. LM2576(HV) -3.3

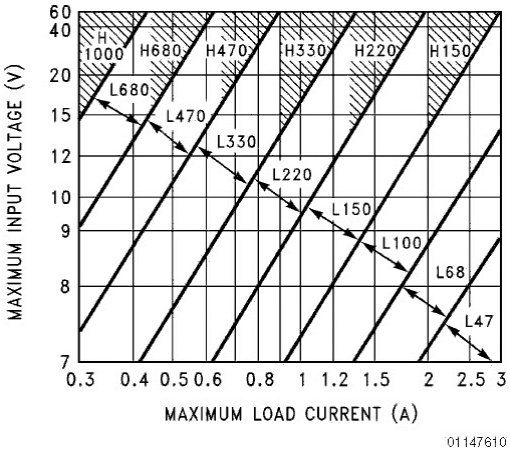

FIGURE 4. LM2576(HV)-5.0

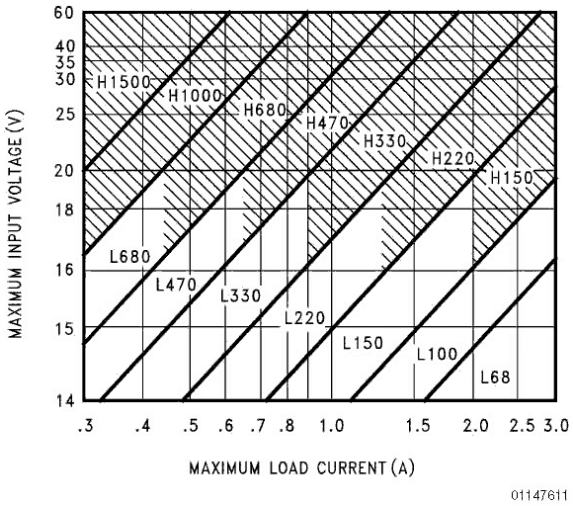

FIGURE 5. LM2576(HV)-12

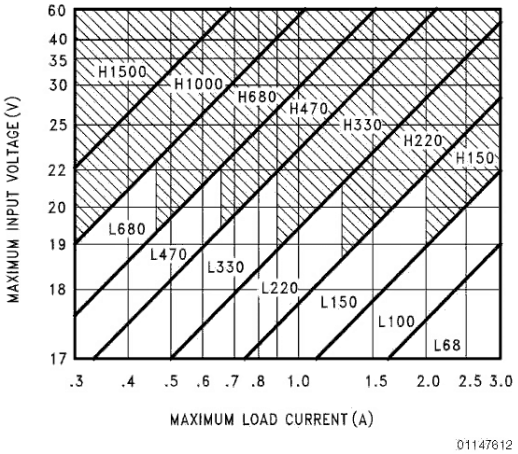

FIGURE 6. LM2576(HV)-15

LM2576 Series Buck Regulator Design Procedure (Continued)

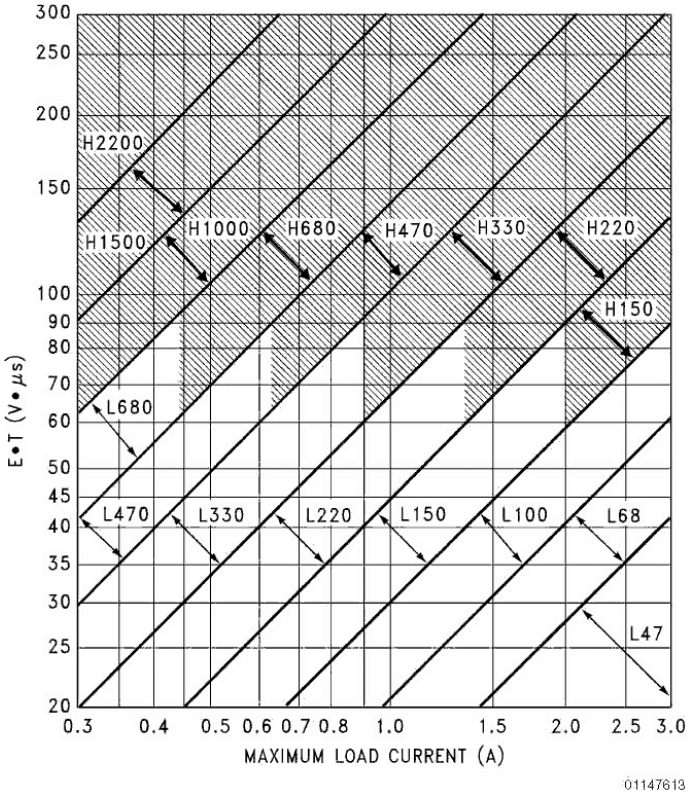

FIGURE 7. LM2576(HV)-ADJ

PROCEDURE (Adjustable Output Voltage Versions)	EXAMPLE (Adjustable Output Voltage Versions)
Given: V_{OUT} =Regulated Output Voltage V_{IN}(Max) =Maximum Input Voltage L_{LOAD}(Max)=Maximum Load Current F=Switching Frequency (Fixed at 52KHz) 1. **Programming Output Voltage** (Selecting R1 and R2, as shown in Figure 2) Use the following formula to select the appropriate resistor values. $V_{OUT} = V_{REF}\left(1 + \frac{R_2}{R_1}\right)$ where $V_{REF} = 1.23V$ R_1 can be between 1K and 5K. (For best temperature coefficient and stability with time, use 1% metal film resistors) $R_2 = R_1\left(\frac{V_{OUT}}{V_{REF}} - 1\right)$	**Given:** V_{OUT} =10V V_{IN}(Max) =25V I_{LOAD}(Max)=3A F=52KHz **1. Programming Output Voltage** (Selecting R1 and R2) $V_{OUT} = 1.23\left(1 + \frac{R_2}{R_1}\right)$ Select R1 = 1k $R_2 = R_1\left(\frac{V_{OUT}}{V_{REF}} - 1\right) = 1k\left(\frac{10V}{1.23V} - 1\right)$ R_2 = 1K (8.13 -1) = 7.13k, closest 1% value is 7.15k

LM2576 Series Buck Regulator Design Procedure (Continued)

PROCEDURE (Adjustable Output Voltage Versions)	EXAMPLE (Adjustable Output Voltage Versions)
2. Inductor Selection (L1) A. Calculate the inductor Volt ● Microsecond constant, E• T (V• μ S), from the following formula: $E \bullet T = (V_{IN} - V_{OUT}) \frac{V_{OUT}}{V_{IN}} \bullet \frac{1000}{F\ (in\ kHz)} (V \bullet \mu s)$ **B.** Use the E• T value from the previous formula and match it with E• T number on the vertical axis of the Inductor Value Selection Guide shown in *Figure 7*. **C.** On the horizontal axis, select the maximum load current. **D.** Identify the inductance region intersected by the E• T value and the maximum load current value, and note the inductor code for that region. E. Identify the inductor value from the table shown in *Figure 9.* Part numbers are listed for three inductor manufacturers. The inductor chosen must be rated for operation at the LM2576 switching frequency (52KHz) and for a current rating of 1.15 X L_{LOAD}. For additional inductor information, see the inductor section in the application hints section of this data sheet.	**2.Inductor Selection (L1) A.** Calculate E• T(V • μ S) $E \bullet T = (25 - 10) \bullet \frac{10}{25} \bullet \frac{1000}{52} = 115\ V \bullet \mu s$ **B.** E• T=115 V • μ s **C.** I_{LOAD}(Max)=3A **D.** Inductance Region = H150 **E.** Inductor Value = 150 μ H Choose from AIE part #415-0936 Pulse Engineering part #PE-531115, or Renco part #RL2445.
3. Output Capacitor Selection (C_{OUT}) A. The value of the output capacitor together with the inductor defines the dominate pole-pair of the switching regulator loop. For stable operation, the capacitor must satisfy the following requirement: $C_{OUT} \geq 13{,}300 \frac{V_{IN}(Max)}{V_{OUT} \bullet L(\mu H)} (\mu F)$ The above formula yields capacitor values between 10 μ F and 2200 μ F that will satisfy the loop requirements for stable operation. But to achieve an acceptable output ripple voltage, (approximately 1% of the output voltage) and transient response, the output capacitor may need to be several times larger than the above formula yields. **B.** The capacitor's voltage rating should be at last 1.5 times greater than the output voltage. For a 10V regulator, a rating of at least 15V or more is recommended. Higher voltage electrolytic capacitors generally have lower ESR numbers, and for this reason it may be necessary to select a capacitor rate for a higher voltage than would normally be needed.	**3.Output Capacitor Selection (C_{OUT})** $C_{OUT} > 13{,}300 \frac{25}{10 \bullet 150} = 22.2\ \mu F$ However, for acceptable output ripple voltage select $C_{OUT} \geq 680$ μ F C_{OUT}=680 μ F electrolytic capacitor
4.Catch Diode Selection (D1) A. The catch-diode current rating must be at least 1.2 times greater than the maximum load current. Also, if the power supply design must withstand a continuous output short, the diode should have a current rating equal to the maximum current limit of the LM2576. The most stressful condition for this diode is and overload or shorted output. See diode selection guide in *Figure 8*. **B.** The reverse voltage rating of the diode should be at least 1.25 times the maximum input voltage.	**4.Catch Diode Selection (D1) A.** For this example, a 3.3A current rating is adequate. **B.** Use a 30V 31DQ03 Schottky diode, or any of the suggested fast-recovery diodes in *Figure8*.
5.Input Capacitor (C_{IN}) An aluminum or tantalum electrolytic bypass capacitor located close to the regulator is needed for stable operation.	**5.Input Capacitor** (C_{IN}) A 100 μ F aluminum electrolytic capacitor located near the input and ground pins provides sufficient bypassing.

V_R	Schottky		Fast Recovery	
	3A	4A-6A	3A	4A-6A
20V	1N5820 MBR320P SR302	1N5823	The following diodes are all rated to 100V 31DF1 HER302	The following diodes are all rated to 100V 50WF10 MUR410 HER602
30V	1N5821 MBR330 31DQ03 SR303	50WQ03 1N5824		
40V	1N5822 MBR340 31DQO4 SR304	MBR340 50WQ04 1N5825		
50V	MBR350 31DQ05 SR305	50WQ05		
60V	MBR360 DQ06 SR306	50WR06 50SQ060		

FIGURE 8. Diode Selection Guide

Inductor Code	Inductor Value	Schott (Note 12)	Pulse Eng. (Note 13)	Renco (Note 14)
L47	47 µ H	671 26980	PE-53112	RL2442
L68	68 µ H	671 26990	PE-92114	RL2443
L100	100 µ H	671 27000	PE-92108	RL2444
L150	150 µ H	671 27010	PE-53113	RL1954
L220	220 µ H	671 27020	PE-52626	RL1953
L330	330 µ H	671 27030	PE-52627	RL1952
L470	470 µ H	671 27040	PE-53114	RL1951
L680	680 µ H	671 27050	PE-52629	RL1950
H150	150 µ H	671 27060	PE-53115	RL2445
H220	220 µ H	671 27070	PE-53116	RL2446
H330	330 µ H	671 27080	PE-53117	RL2447
H470	470 µ H	671 27090	PE-53118	RL1961
H680	680 µ H	671 27100	PE-53119	RL1960
H1000	1000 µ H	671 27110	PE-53120	RL1959
H1500	1500 µ H	671 27120	PE-53121	RL1958
H2200	2200 µ H	671 27130	PE-53122	RL2448

Note 12: Schott Corporation, (612) 475 -1173, 1000 Parkers Lake Road, Wayzata, MN 55391.
Note 13: Pulse Engineering, (619) 674-8100, P.O. Box 12235, San Diego, CA 92112.
Note 14: Renco Electronics Incorporated, (516) 586-5566, 60 Jeffryn Blvd. East, Deer Park, NY 11729.

FIGURE 9. Inductor Selection by Manufacturer's Part Number

Application Hints

INPUT CAPACITOR (C_{IN})

To maintain stability, the regulator input pin must be by-passed with at least a 100 µ F electrolytic capacitor. The capacitor's leads must be kept short, and located near the regulator. If the operating temperature range includes temperatures below -25°C, the input capacitor value may need to be larger. With most electrolytic capacitors, the capacitance value decreases and the ESR increases with lower temperatures and age. Paralleling a ceramic or solid tantalum capacitor will increase the regulator stability at cold temperatures. For maximum capacitor operating lifetime, the capacitor's RMS ripple current rating should be greater than

Application Hints(Continued)

$$1.2 \times \left(\frac{t_{ON}}{T}\right) \times I_{LOAD}$$

where $\frac{t_{ON}}{T} = \frac{V_{OUT}}{V_{IN}}$ for a buck regulator

and $\frac{t_{ON}}{T} = \frac{|V_{OUT}|}{|V_{OUT}| + V_{IN}}$ for a buck-boost regulator.

INDUCTOR SELECTION

All switching regulators have two basic modes of operation: continuous and discontinuous. The difference between the two types relates to the inductor current, whether it is flowing continuously, or if it drops to zero for a period of time in the normal switching cycle. Each mode has distinctively different operating characteristics, which can affect the regulator performance and requirements.

The LM2576 (or any of the SIMPLE SWITCHER family) can be used for both continuous and discontinuous modes of operation.

The inductor value selection guides in *Figure 3* through *Figure 7* were designed for buck regulator designs of the continuous inductor current type. When using inductor values shown in the inductor selection guide, the peak-to-peak inductor ripple current will be approximately 20% to 30% of the maximum DC current. With relatively heavy load currents, the circuit operates in the continuous mode (inductor current always flowing), but under light load conditions, the circuit will be forced to the discontinuous mode (inductor current falls to zero for a period of time). This discontinuous mode of operation is perfectly acceptable. For light loads (less than approximately 300mA) it may be desirable to operate the regulator in the discontinuous mode, primarily because of the lower inductor values required for the discontinuous mode.

The selection guide chooses inductor values suitable for continuous mode operation, but if the inductor value chosen is prohibitively high, the designer should investigate the possibility of discontinuous operation. The computer design software ***Switchers Made Simple*** will provide all component values for discontinuous (as well as continuous) mode of operation.

Inductors are available in different styles such as pot core, toriod, E-frame, bobbin core, etc., as well as different core materials, such as ferrites and powdered iron. The least expensive, the bobbin core type, consists of wire wrapped on a ferrite rod core. This type of construction makes for an inexpensive inductor, but since the magnetic flux is not completely contained within the core, it generates more electromagnetic interference (EMI). This EMI can cause problems in sensitive circuits, or can give incorrect scope readings because of induced voltages in the scope probe.

The inductors listed in the selection chart include ferrite pot core construction for AIE, powdered iron toroid for Pulse Engineering, and ferrite bobbin core for Renco.

An inductor should not be operated beyond its maximum rated current because it may saturate. When an inductor begins to saturate, the inductance decreases rapidly and the inductor begins to look mainly resistive (the DC resistance of winding). This will cause the switch current to rise very rapidly. Different inductor types have different saturation characteristics, and this should be kept in mind when selecting an inductor.

The inductor manufacturer's data sheets include current and energy limits to avoid inductor saturation.

INDUCTOR RIPPLE CURRENT

When the switcher is operating in the continuous mode, the inductor current waveform ranges from a triangular to a sawtooth type of waveform (depending on the input voltage). For a given input voltage and output voltage, the peak-to-peak amplitude of this inductor current waveform remains constant. As the load current rises or falls, the entire sawtooth current waveform also rises or falls. The average DC value of this waveform is equal to the DC load current (in the buck regulator configuration).

If the load current drops to a low enough level, the bottom of the sawtooth current waveform will reach zero, and the swithcher will change to a discontinuous mode of operation. This is a perfectly acceptable mode of operation. Any buck switching regulator (no matter how large the inductor value is) will be forced to run discontinuous if the load current is light enough.

OUTPUT CAPACITOR

An output capacitor is required to filter the output voltage and is needed for loop stability. The capacitor should be located near the LM2576 using short pc board traces. Standard aluminum electrolytics are usually adequate, but low ESR types are recommended for low output ripple voltage and good stability. The ESR of a capacitor depends on many factors, some which are: the value, the voltage rating, physical size and the type of construction. In general, low value or low voltage (less than 12V) electrolytic capacitors usually have higher ESR numbers.

The amount of output ripple voltage is primarily a function of the ESR (Equivalent Series Resistance) of the output capacitor and the amplitude of the inductor ripple current ($\triangle I_{IND}$). See the section on inductor ripple current in Application Hints.

The lower capacitor values (220 μF - 1000 μF) will allow typically 50mV to 150mV of output ripple voltage, while larger-value capacitors will reduce the ripple to approximately 20 mV to 50Mv.

Output Ripple Voltage =($\triangle I_{IND}$) (ESR of C_{OUT})

To further reduce the output ripple voltage, several standard electrolytic capacitors may be paralleled, or a higher-grade capacitor may be used. Such capacitors are often called "high-frequency," "low-inductance," or "low-ESR." These will reduce the output ripple to 10mV or 20Mv. However, when operating in the continuous mode, reducing the ESR below 0.03 Ω can cause instability in the regulator.

Tantalum capacitors can have a very low ESR, and should be carefully evaluated if it is the only output capacitor. Because of their good low temperature characteristics, a tantalum can be used in parallel with aluminum electrolytics, with the tantalum making up 10% or 20% of the total capacitance.

The capacitor's ripple current rating at 52kHz should be at least 50% higher than the peak-to-peak inductor ripple current.

Application Hints (Continued)

CATCH DIODE

Buck regulators require a diode to provide a return path for the inductor current when the switch is off. This diode should be located close to the LM2576 using short leads and short printed circuit traces.

Because of their fast switching speed and low forward voltage drop. Schottky diodes provide the best efficiency, especially in low output voltage switching regulators (less than 5V). Fast-Recovery, High-Efficiency, or Ultra-Fast Recovery diodes are also suitable, but some types with an abrupt turn-off characteristic may cause instability and EMI problems, A fast-recovery diode with soft recovery characteristics is a better choice. Standard 60Hz diodes (e.g., 1N4001 or 1N5400, etc.) are also not suitable. See *Figure 8* for Schottky and "soft" fast-recovery diode selection guide.

OUTPUT VOLTAGE RIPPLE AND TRANSIENTS

The output voltage of a switching power supply will contain a sawtooth ripple voltage at the switcher frequency, typically about 1% of the output voltage, and may also contain short voltage spikes at the peaks of the sawtooth waveform.

The output ripple voltage is due mainly to the inductor sawtooth ripple current multiplied by the ESR of the output capacitor. (See the inductor selection in the application hints.)

The voltage spikes are present because of the fast switching action of the output switch, and the parasitic inductance of the output filter capacitor. To minimize these voltage spikes, special low inductance capacitors can be used, and their lead lengths must be kept short. Wiring inductance, stray capacitance, as well as the scope probe used to evaluate these transients, all contribute to the amplitude of these spikes.

An additional small LC filter (20μH&100 μF) can be added to the output (as shown in *Figure 15*) to further reduce the amount of output ripple and transients. A 10X reduction in output ripple voltage and transients is possible with this filter.

FEEDBACK CONNECTION

The LM2576 (fixed voltage versions) feedback pin must be wired to the output voltage point of the switching power supply. When using the adjustable version, physically locate both output voltage programming resistors near the LM2576 to avoid picking up unwanted noise. Avoid using resistors greater than 100kΩ because of the increased chance of noise pickup.

$\overline{ON}$/OFF INPUT

For normal operation, the $\overline{ON}$/OFF pin should be grounded or driven with a low-level TTL voltage (typically below 1.6V). To put the regulator into standby mode, drive this pin with a high-level TTL or CMOS signal. The $\overline{ON}$/OFF pin can be safely pulled up to $+V_{IN}$ without a resistor in series with it. The $\overline{ON}$/OFF pin should not be left open.

GROUNDING

To maintain output voltage stability, the power ground connections must be low-impedance (see Figure 2). For the 5-lead TO-220 and To-263 style package, both the tab and pin 3 are ground and either connection may be used, as they are both part of the same copper lead frame.

HEAT SINK/THERMAL CONSIDERATIONS

In many cases, only a small heat sink is required to keep the LM2576 junction temperature within the allowed operating range. For each application, to determine whether or not a heat sink will be required, the following must be identified:

1. Maximum ambient temperature (in the application).
2. Maximum regulator power dissipation (in application).
3. Maximum allowed junction temperature (125°C for the LM2576). For a safe, conservative design, a temperature approximately 15 °C cooler than the maximum temperatures should be selected.
4. Lm2576 package thermal resistances θ_{JA} and θ_{JC}.

Total power dissipated by the LM2576 can be estimated as follows:

$P_D = (V_{IN})(I_Q)+(V_O/V_{IN})(I_{LOAD})(V_{SAT})$

Where I_Q (quiescent current) and V_{SAT} can be found in the Characteristic Curves shown previously, V_{IN} is the applied minimum input voltage, V_O is the regulated output voltage, and I_{LOAD} is the load current. The dynamic losses during turn-on and turn-off are negligible if a Schottky type catch diode is used.

When no heat sink is used, the junction temperature rise can be determined by the following:

$\triangle T_J = (P_D)(\theta_{JA})$

To arrive at the actual operating junction temperature, add the junction temperature rise to the maximum ambient temperature.

$T_J = \triangle T_J + T_A$

If the actual operating junction temperature is greater than the selected safe operating junction temperature determined in step 3, then a heat sink is required.

When using a heat sink, the junction temperature rise can be determined by the following:

$\triangle T_J = (P_D)(\theta_{JC} + \theta_{interface} + \theta_{Heat\ sink})$

The operating junction temperature will be:

$T_J = T_A + \triangle T_J$

As above, if the actual operating junction temperature is greater than the selected safe operating junction temperature, then a larger heat sink is required (one that has a lower thermal resistance).

Included on the **Switcher Made Simple** design software is a more precise (non-linear) thermal model that can be used to determine junction temperature with different input-output parameters or different component values. It can also calculate the heat sink thermal resistance required to maintain the regulators junction temperature below the maximum operating temperature.

Additional Applications

INVERTING REGULATOR

Figure 10 shows a LM2576-12 in a buck-boost configuration to generate a negative 12V output from a positive input voltage. This circuit bootstraps the regulator's ground pin to the negative output voltage, then by grounding the feedback pin, the regulator senses the inverted output voltage and regulates it to-12V.

For an input voltage of 12V or more, the maximum available output current in this configuration is approximately 700mA. At lighter loads, the minimum input voltage required drops to approximately 4.7V.

Additional Applications (Continued)

The switch currents in this buck-boost configuration are higher than in the standard buck-mode design, thus lowering the available output current. Also, the start-up input current of the buck-boost converter is higher than the standard buck-mode regulator, and this may overload an input power source with a current limit less than 5A. Using a delayed turn-on or an undervoltage lockout circuit (described in the next section) would allow the input voltage to rise to a high enough level before the switcher would be allowed to turn on.

Because of the structural differences between the buck and the buck-boost regulator topologies, the buck regulator design procedure section can not be used to select the inductor or the output capacitor. The recommended range of inductor values for the buck-boost design is between 68 µH and 220 µH, and the output capacitor values must be larger than what is normally required for buck designs. Low input voltages or high output currents require a large value output capacitor (in the thousands of micro Farads).

The peak inductor current, which is the same as the peak switch current, can be calculated from the following formula:

$$I_p \approx \frac{I_{LOAD}(V_{IN} + |V_O|)}{V_{IN}} + \frac{V_{IN}|V_O|}{V_{IN} + |V_O|} \times \frac{1}{2L_1 f_{osc}}$$

Where f_{OSC}=52 kHz. Under normal continuous inductor current operating conditions, the minimum V_{IN} represents the worst case. Select an inductor that is rated for the peak current anticipated.

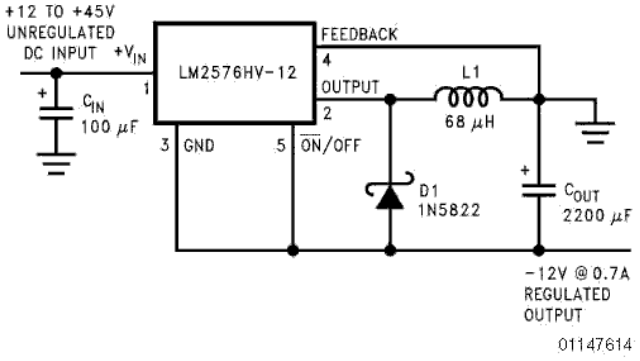

FIGURE 10. Inverting Buck-Boost Develops-12V

Also, the maximum voltage appearing across the regulator is the absolute sum of the input and output voltage. For a -12V output, the maximum input voltage for the LM2576 is +28V, or +48V for the LM2576HV.

The *Switchers Made Simple* (version 3.0) design software can be used to determine the feasibility of regulator designs using different topologies, different input-output parameters, different components, etc.

NEGATIVE BOOST REGULATOR

Another variation on the buck-boost topology is the negative boost configuration. The circuit in *Figure 11* accepts an input voltage ranging from -5V to -12V and provides a regulated -12V output. Input voltages greater than -12V will cause the output to rise above -12V, but will not damage the regulator.

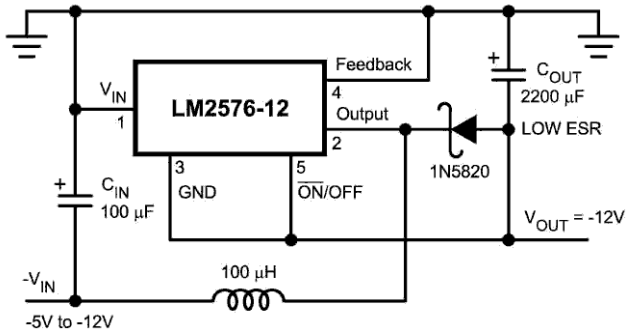

Typical Load Current

400mA for V_{IN} = -5.2V

750mA for V_{IN} = -7V

Note: Heat sink may be required.

FIGURE 11. Negative Boost

Because of the boosting function of this type of regulator, the switch current is relatively high, especially at low input voltages. Output load current limitations are a result of the maximum current rating of the switch. Also, boost regulators can not provide current limiting load protection in the event of a shorted load, so some other means (such as a fuse) may be necessary.

UNDERVOLTAGE LOCKOUT

In some applications it is desirable to keep the regulator off until the input voltage reaches a certain threshold. An under voltage lockout circuit which accomplishes this task is shown in *Figure 12*, while *Figure 13* shows the same circuit applied to a buck-boost configuration. These circuits keep the regulator off until the input voltage reaches a predetermined level.

$$V_{TH} \approx V_{Z1} + 2V_{BE}(Q1)$$

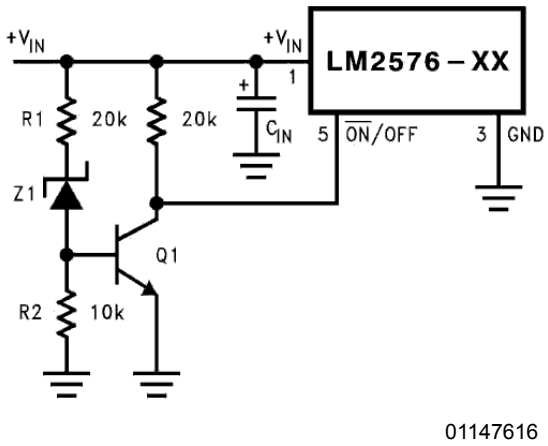

Note: Complete circuit not shown.

FIGURE 12. Undervoltage Lockout for Buck Circuit.

Additional Applications (Continued)

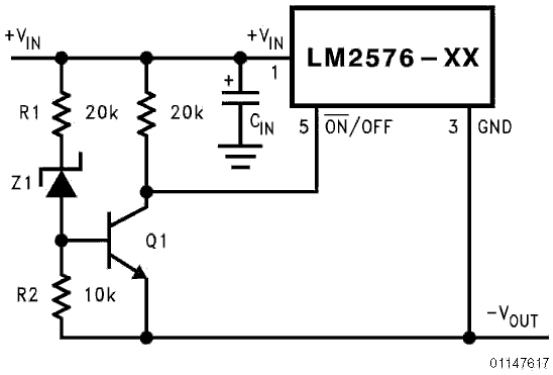

Note: Complete circuit not shown (see *Figure 10*)

FIGURE 13. Undervoltage Lockout for Buck-Boost Circuit

DELAYED STARTUP

The $\overline{ON}$/OFF pin can be used to provide a delayed start up feature as shown in *Figure 14*. With an input voltage of 20V and for the part values shown, the circuit provides approximately 10ms of delay time before the circuit beigns switching. Increasing the RC time constant can provide longer delay times. But excessively large RC time constants can cause problems with input voltages that are high in 60Hz or 120Hz ripple, by coupling the ripple into the $\overline{ON}$/OFF pin.

ADJUSTABLE OUTPUT, LOW-RIPPLE POWER SUPPLY

A 3A power supply that features an adjustable output voltage is shown in *figure 15*. An additional L-C filter that reduces the output ripple by a factor of 10 or more is included in this circuit.

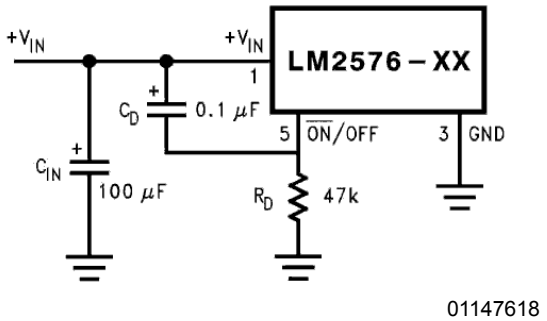

Note: Complete circuit not shown.

FIGURE 14. Delayed Startup

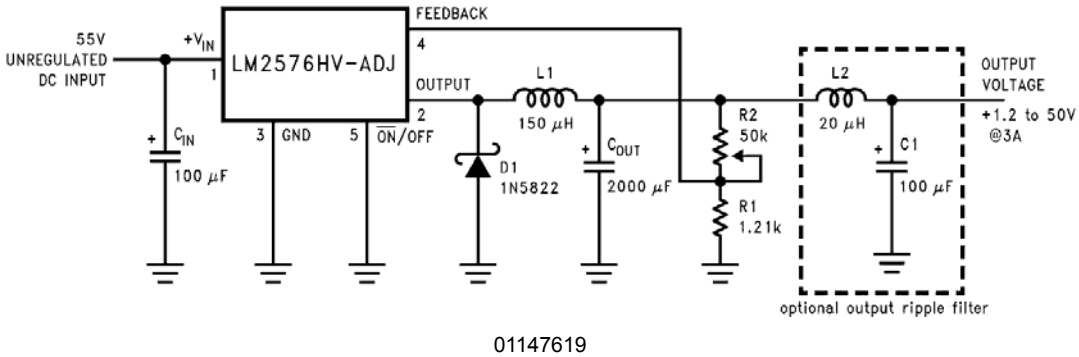

FIGURE 15. 1.2V to 55V Adjustable 3A Power Supply with Low Output Ripple

Definition of Terms

BUCK REGULATOR

A switching regulator topology in which a higher voltage is converted to a lower voltage. Also known as a step-down switching regulator.

BUCK-BOOST REGULATOR

A switching regulator topology in which a positive voltage is converted to a negative voltage without a transformer.

DUTY CYCLE(D)

Ratio of the output switch's on-time to the oscillator period.

for buck regulator $$D = \frac{t_{ON}}{T} = \frac{V_{OUT}}{V_{IN}}$$

for buck-boost regulator $$D = \frac{t_{ON}}{T} = \frac{|V_O|}{|V_O| + V_{IN}}$$

CATCH DIODE OR CURRENT STEERING DIODE

The diode which provides a return path for the load current when the LM2576 switch is OFF.

EFFICIENCY(η)

The proportion of input power actually delivered to the load.

$$\eta = \frac{P_{OUT}}{P_{IN}} = \frac{P_{OUT}}{P_{OUT} + P_{LOSS}}$$

Definition of Terms (Continued)

CAPACITOR EQUIVALENT SERIES RESISTANCE (ESR)

The purely resistive component of a real capacitor's impedance (see *Figure 16*). It causes power loss resulting in capacitor heating ,which directly affects the capacitor's operating lifetime. When used as a switching regulator output filter, higher ESR values result in higher output ripple voltages.

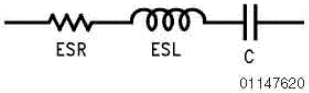

FIGURE 16. Simple Model of a Real Capacitor

Most standard aluminum electrolytic capacitors in the 100 µF -1000 µF range have 0.5 Ω to 0.1 Ω ESR. Higher-grade capacitors ("low-ESR", "high-frequency", or "low-inductance") in the 100 µF -1000 µF range generally have ESR of less than 0.15 Ω.

EQUIVALENT SERIES INDUCTANCE (ESL)

The pure inductance component of a capacitor (see *Figure 16*). The amount of inductance is determined to a large extent on the capacitor's construction. In a buck regulator, this unwanted inductance causes voltage spikes to appear on the output.

OUTPUT RIPPLE VOLTAGE

The AC component of the switching regulator's output voltage. It is usually dominated by the output capacitor's ESR multiplied by the inductor's ripple current ($\triangle I_{IND}$). The peak-to-peak value of this sawtooth ripple current can be determined by reading the Inductor Ripple Current section of the Application hints.

CAPACITOR RIPPLE CURRENT

RMS value of the maximum allowable alternating current at which a capacitor can be operated continuously at a specified temperature.

STANDBY QUIESCENT CURRENT (I_{STBY})

Supply current required by the LM2576 when in the standby mode ($\overline{ON}$/OFF pin is driven to TTL-high voltage, thus turning the output switch OFF).

INDUCTOR RIPPLE CURRENT ($\triangle I_{IND}$)

The peak-to-peak value of the inductor current waveform, typically a sawtooth waveform when the regulator is operating in the continuous mode (vs. discontinuous mode).

CONTINUOUS/DISCONTINUOUS MODE OPERATION

Relates to the inductor current. In the continuous mode, the inductor current is always flowing and never drops to zero, vs. the discontinuous mode, where the inductor current drops to zero for a period of time in the normal switching cycle.

INDUCTOR SATURATION

The condition which exists when an inductor cannot hold any more magnetic flux. When an inductor saturates, the inductor appears less inductive and the resistive component dominates. Inductor current is then limited only by the DC resistance of the wire and the available source current.

OPERATING VOLT MICROSECOND CONSTANT (E•Top)

The product (in Volt• µs) of the voltage applied to the inductor and the time the voltage is applied. This E•Top constant is a measure of the energy handling capability of an inductor and is dependent upon the type of core, the core area, the number of turns, and the duty cycle.

Connection Diagrams (Note 15)

Straight Leads
5-Lead TO-220(T)
Top View

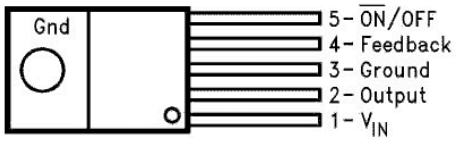

01147621

LM2576T-XX or LM2576HVT-XX
NS Package Number T05A

TO-263(S)
5-Lead Surface-Mount Package
Top View

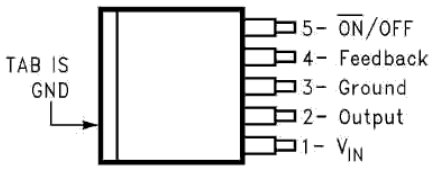

Side View

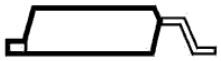

01147625

LM2576S-XX or LM2576HVS-XX
NS Package Number TS5B
LM2576SX-XX or LM2576HVSX-XX
NS Package Number TS5B, Tape and Reel

Bent, Staggered Leads
5-Lead TO-220 (T)
Top View

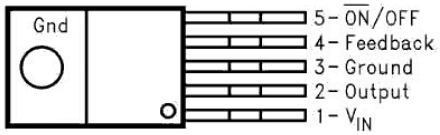

Side View

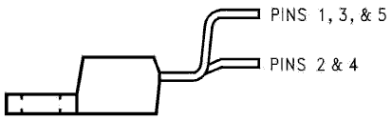

01147622

LM2576T-XX Flow LB03
Or LM2576HVT-XX Flow LB03
NS Package Number T05D

Note15:(XX indicates output voltage option. See ordering information table for complete part number.)

Physical Dimensions inches (millimeters)

Unless otherwise noted

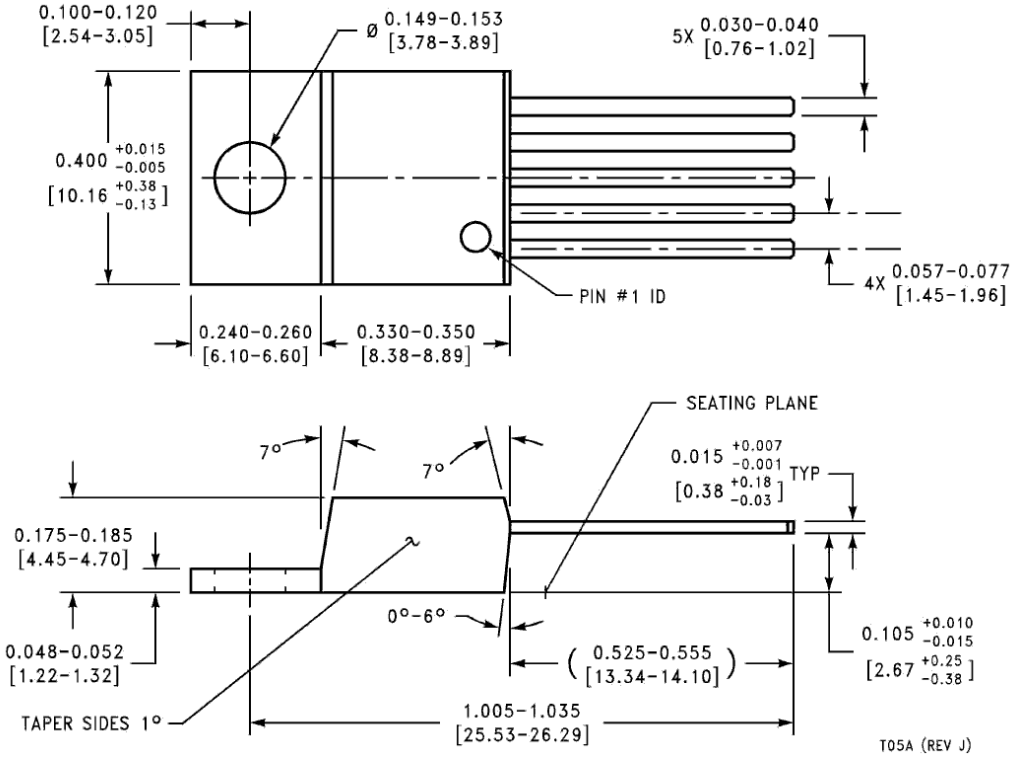

Physical Dimensions inches (millimeters) unless otherwise noted (Continued)

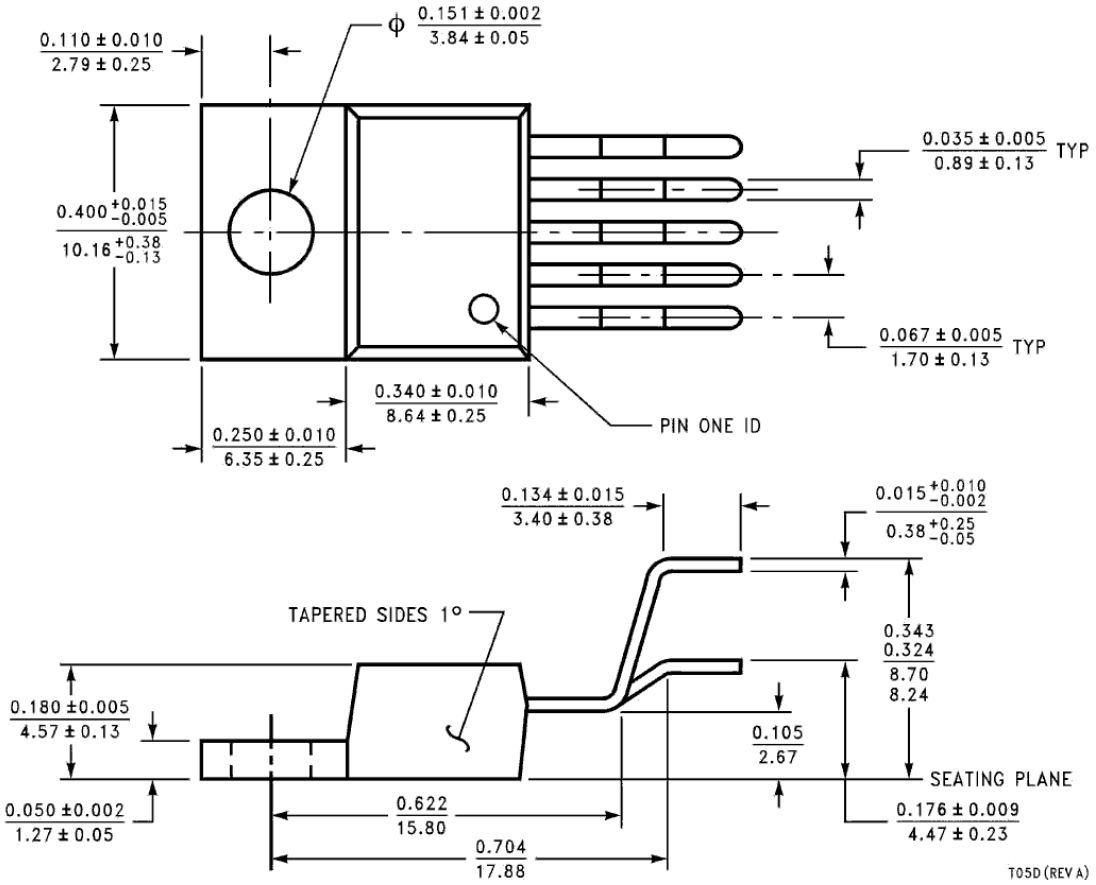
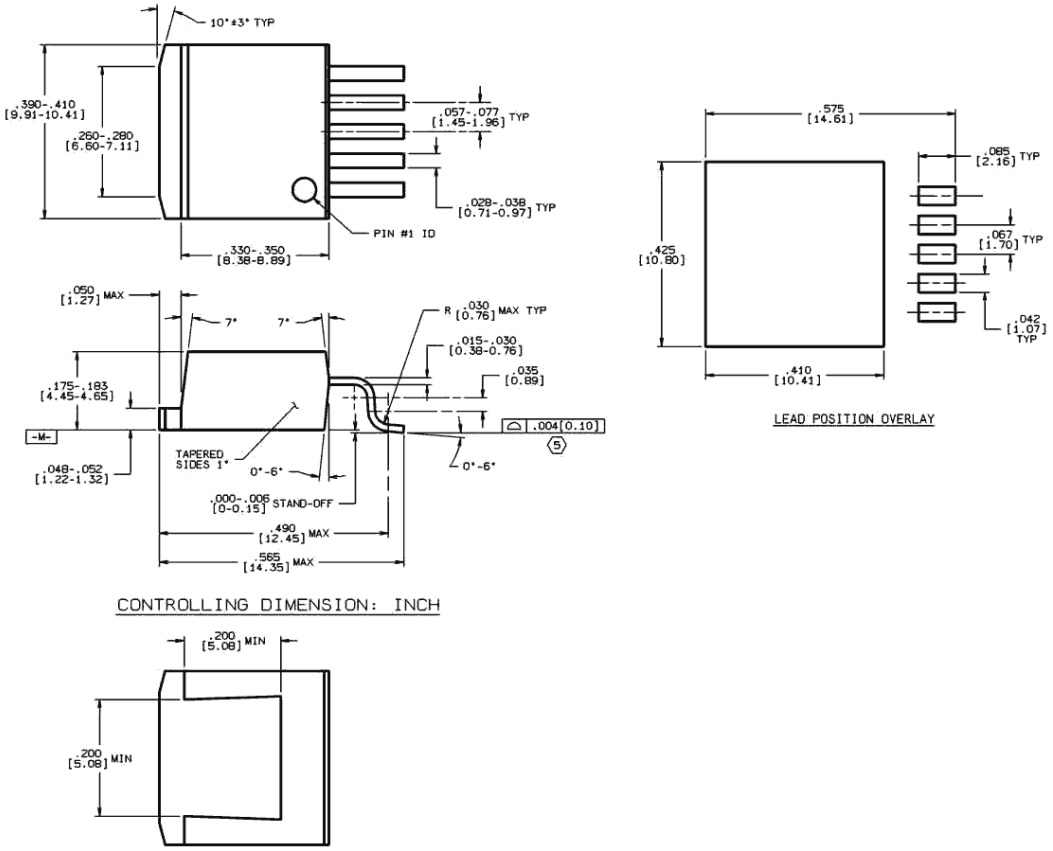
Physical Dimensions inches (millimeters) unless otherwise noted (Continued)