HFE80V-80 LOW VOLTAGE DIRECT CURRENT RELAY

Features

- Carrying current 80A continuously at 85℃
- No specific polarity requirements for the connection
- 3kV dielectric strength between coil & contacts
- Outline Dimensions: (55.1 x 42.6 x 49.1) mm
  (55.1 x 76.6 x 49.6) mm

CONTACT DATA

Contact arrangement		1A
Contact resistance		1.5mΩ max.(6VDC 20A)
Rated load current		80A
Mechanical endurance		2 x 10^5 ops
Max. switching voltage		150VDC
Max. breaking current		100A
Max. switching power		12kW
Electrical endurance1)	Res. load	Switching: 1 x 10^5 ops (12VDC, 80A)
		Switching: 5 x 10^4 ops (48VDC, 80A)
		Switching: 3 x 10^4 ops (72VDC, 80A)
		Switching: 1 x 10^4 ops (150VDC, 80A)
Current carrying capacity2)		80A: Cont.
		120A: 20min
		240A: 30s
		600A: 1s

Notes: 1) Until special statement, the temperature of eletrical endurance is at 23℃ and the on-off ratio is 0.6s:5.4s.
2) Ambient temperature is room temperature and cross section area of wire is 20mm^2 min. See Pic Endurance Capacity Curve for more information.

COIL

Nominal Voltage VDC	Pick-up Voltage VDC max.	Drop-out Voltage VDC min.	Coil power W
12	9	1.0	3
24	18	2.0	3

Notes: The values above are conservative values within the temperature range(-40℃ to 85℃), the pick-up voltage and drop-out voltage are showed in the Pic Pick-up Voltage / Drop-out Voltage Curve.

CHARACTERISTICS

Insulation resistance		1000MΩ (at 500VDC)
Dielectric strength	Between coil & contacts	3000VAC 1min.
	Between open contacts	2000VAC 1min.
Operate time (at nomi. volt.)		30ms max.
Release time (at nomi. volt.)		10ms max.
Shock resistance	Functional	196m/s^2
	Destructive	490m/s^2
Vibration resistance		10Hz to 500Hz 49m/s^2
Humidity		5% to 85% RH
Ambient temperature		-40℃ to 85℃
Termination		QC
Unit weight		Approx.200g

Notes: The data shown above are initial values.

ORDERING INFORMATION

HFE80V	-80/	150-	12-	H	T	2	B	(XXX)

Type	**V:** New energy vehicle
Contact rating	**80:** 80A
Load voltage	**Nil:** ≤24VDC **150:** ≤150VDC
Coil voltage	**12**: 12VDC **24**: 24VDC
Contact form	**H:** 1 Form A
Contact material	**T:** $AgSnO_2$
Load input terminal	**2:** QC
Shell structure	B: With mounting boss **Nil:** Without mounting boss
Special code[1)]	**XXX:** Customer special requirement **Nil:** Standard

Notes: 1) The customer special requirement express as special code after evaluating by Hongfa.

OUTLINE DIMENSIONS,INSTALLATION HOLE

Unit: mm

Outline Dimensions

HFE80V-80/XXX-XX-HT2

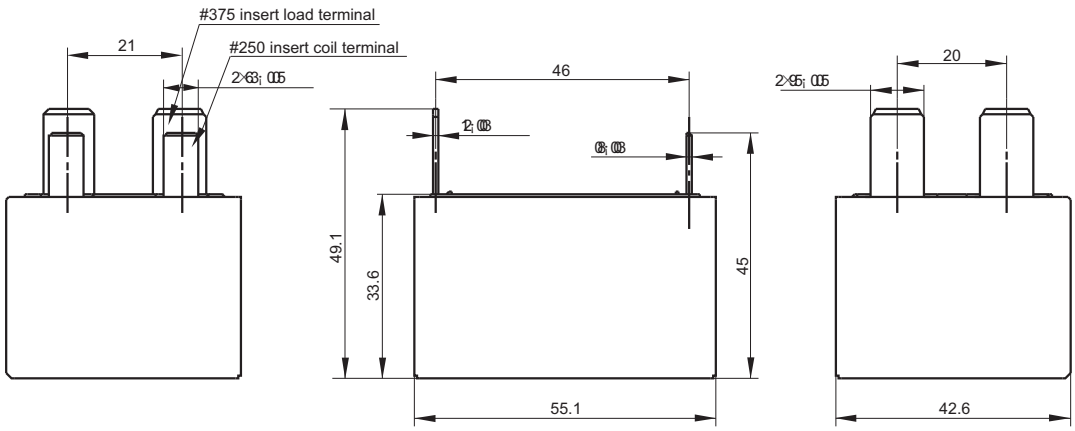

OUTLINE DIMENSIONS,INSTALLATION HOLE

Unit: mm

Outline Dimensions

HFE80V-80/XXX-XX-HT2B

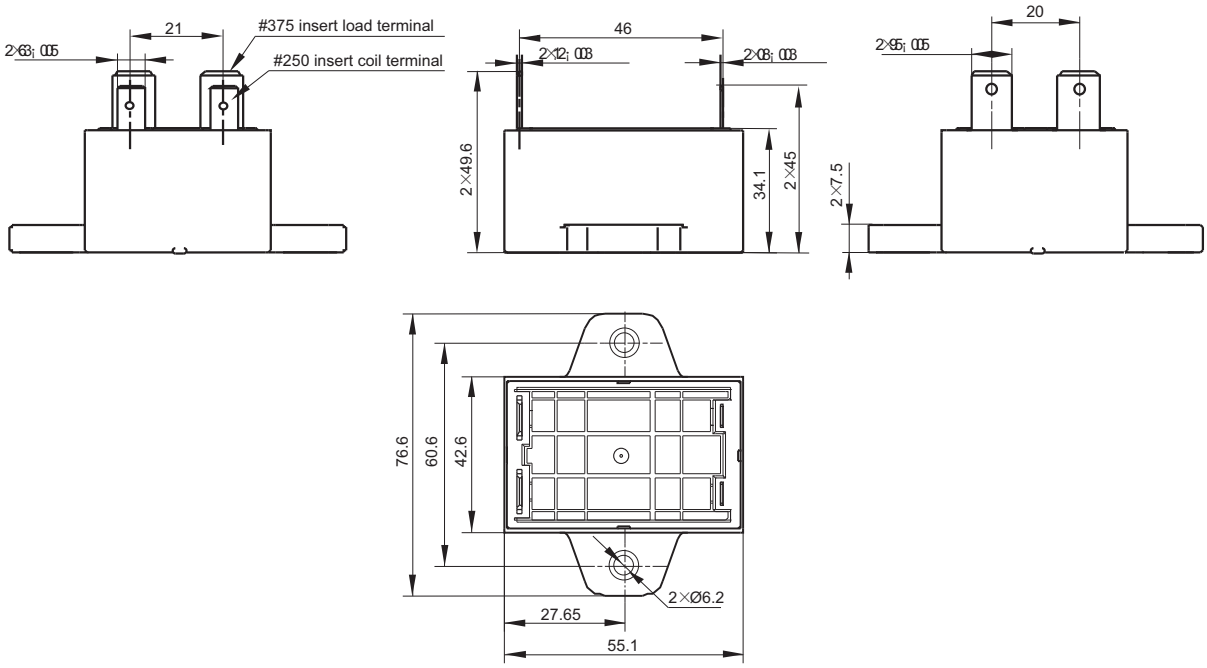

Remark: In case of no tolerance shown in outline dimension: outline dimension ≤10mm, tolerance should be ±0.3mm; outline dimension >10mm and ≤50mm, tolerance should be ±0.5mm; outline dimension >50mm, tolerance should be ±0.8mm.

Coil Wiring Diagram

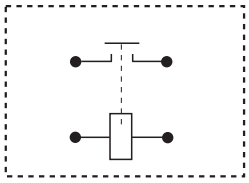

note: no polarity on the loads and coil.

CHARACTERISTIC CURVES

Endurance Capacity Curve

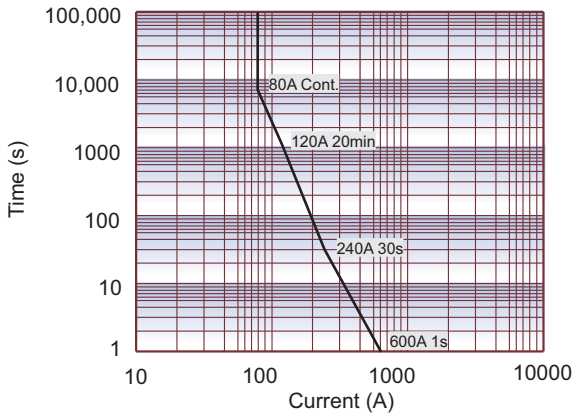

Notes: The data above is measured at the environment temperature 85℃ with cross section area of wire ⩾20mm^2. This data is only for reference and please do not use it for fuse selection.

Pick-up Voltage / Drop-out Voltage Curve

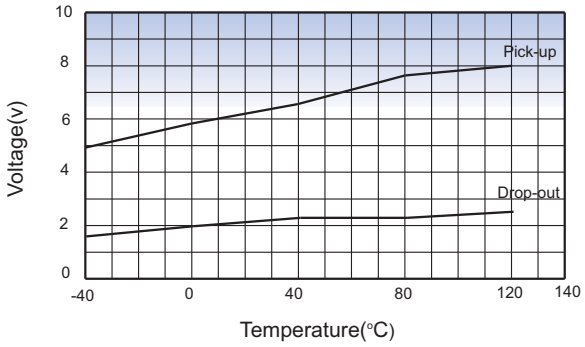

Notes: When the coil voltage is 12V, the data above is taken as sample value and only for reference (Sample quantity: n=3)

Cautions

1. In case of loosening, please use washer when install the relay with M5 screw, and the torque within 3N·m to 4N·m. The push and pull force for terminals is 49N for load terminals and 49N for coil terminals. The torque beyond the range may cause damage.

2. Please do not adhere foreign materials like oil on the terminals and please use the wire with cross section area 20mm^2 min, otherwise the terminal parts may have abnormal heating.

3. Cautions of Relay installation:

Unrecommended method
The hole of mounting panel at customer-side is too large.

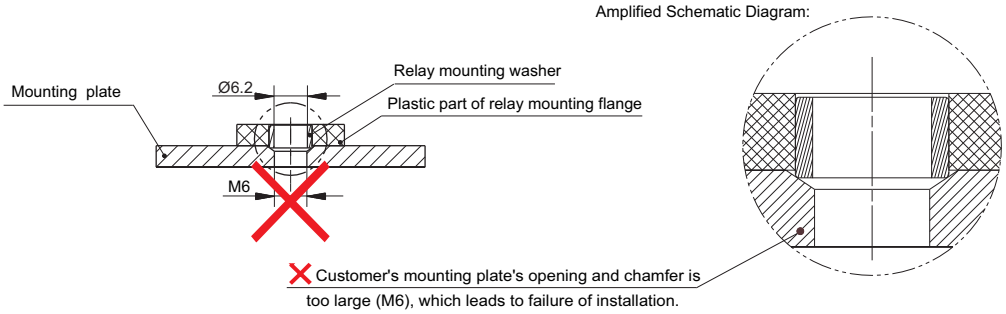

Recommended method
The hole in mounting panel at customer-side is M5

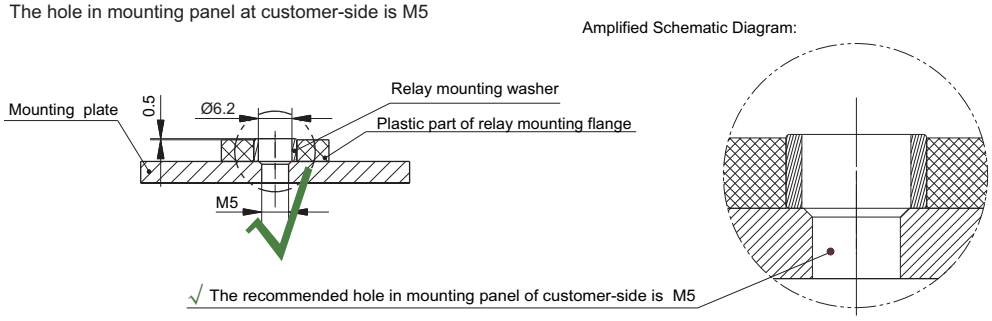

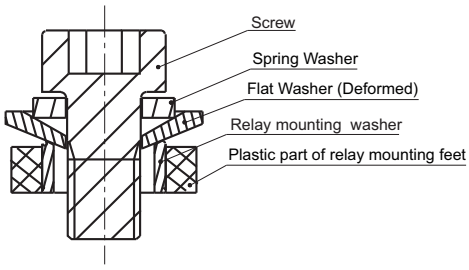

When use M5 screw, the thickness and strength of the washer needs to be guaranteed or it may deform and burst the cover.

Disclaimer

The specification is for reference only. See to "Terminology and Guidelines" for more information. Specifications subject to change without notice. We could not evaluate all the performance and all the parameters for every possible application. Thus the user should be in a right position to choose the suitable product for their own application. If there is any query, please contact Hongfa for the technical service. However, it is the user's responsibility to determine which product should be used only.