TLS810D1xxV33

Ultra Low Quiescent Current Linear Voltage Regulator

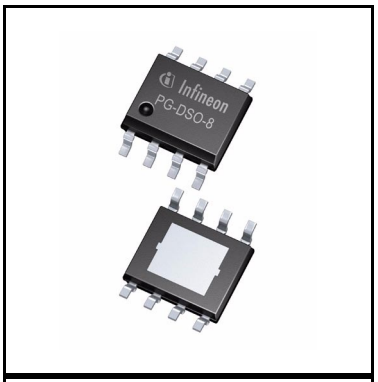

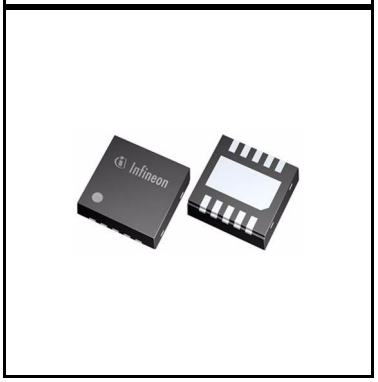

1 Overview

Quality Requirement Category: Automotive

Features

- Ultra Low Quiescent Current of 9 µA
- Wide Input Voltage Range of 2.75 V to 42 V
- Output Current Capacity up to 100 mA
- Off Mode Current Less than 1 µA
- Low Drop Out Voltage of typ. 250 mV @ 100 mA
- Output Current Limit Protection
- Overtemperature Shutdown
- Enable
- Reset
- Available in PG-DSO-8 EP Package
- Available in PG-TSON-10 Package
- Wide Temperature Range
- Green Product (RoHS Compliant)
- AEC Qualified

Applications

- Applications with direct battery connection
- Automotive general ECUs
- Infotainment, alarm, dashboard

Overview

- RKE, immobilizer, gateway

Description

The TLS810D1 is a linear voltage regulator featuring wide input voltage range, low drop out voltage and ultra low quiescent current.

With an input voltage range of 2.75 V to 42 V and ultra low quiescent of only 9 µA, the regulator is perfectly suitable for automotive or any other supply systems connected permanently to the battery.

The TLS810D1xxV33 is the fixed 3.3 V output version with an accuracy of 2 % and output current capability up to 100 mA.

The new regulation concept implemented in TLS810D1 combines fast regulation and very good stability while requiring only a small ceramic capacitor of 1 µF at the output.

The tracking region starts already at input voltages of 2.75 V (extended operating range). This makes the TLS810D1 also suitable to supply automotive systems that need to operate during cranking condition.

Internal protection features like output current limitation and overtemperature shutdown are implemented to protect the device against immediate damage due to failures like output short circuit to GND, over-current and over-temperature.

The device can be switched on and off by the Enable feature. When the device is switched off, the current consumption is typically less than 1 µA.

The output voltage is supervised by the Reset feature, including undervoltage reset and delayed reset release at power-on.

Type	Package	Marking
TLS810D1EJV33	PG-DSO-8 EP	810D1V33
TLS810D1LDV33	PG-TSON-10	810D1V3

Table of Contents

1 Overview . . . 1
Table of Contents . . . 3
2 Block Diagram . . . 4
3 Pin Configuration . . . 5
3.1 Pin Assignment in PG-DSO-8 EP Package . . . 5
3.2 Pin Definitions and Functions in PG-DSO-8 EP Package . . . 5
3.3 Pin Assignment in PG-TSON-10 Package . . . 6
3.4 Pin Definitions and Functions in PG-TSON-10 Package . . . 6
4 General Product Characteristics . . . 8
4.1 Absolute Maximum Ratings . . . 8
4.2 Functional Range . . . 9
4.3 Thermal Resistance . . . 10
5 Block Description and Electrical Characteristics . . . 11
5.1 Voltage Regulation . . . 11
5.2 Typical Performance Characteristics Voltage Regulation . . . 13
5.3 Current Consumption . . . 16
5.4 Typical Performance Characteristics Current Consumption . . . 17
5.5 Enable . . . 18
5.6 Typical Performance Characteristics Enable . . . 19
5.7 Reset Function . . . 20
5.8 Typical Performance Characteristics Reset . . . 24
6 Application Information . . . 25
6.1 Application Diagram . . . 25
6.2 Selection of External Components . . . 25
6.2.1 Input Pin . . . 25
6.2.2 Output Pin . . . 25
6.3 Thermal Considerations . . . 26
6.4 Reverse Polarity Protection . . . 27
6.5 Further Application Information . . . 27
7 Package Outlines . . . 28
8 Revision History . . . 30

2 Block Diagram

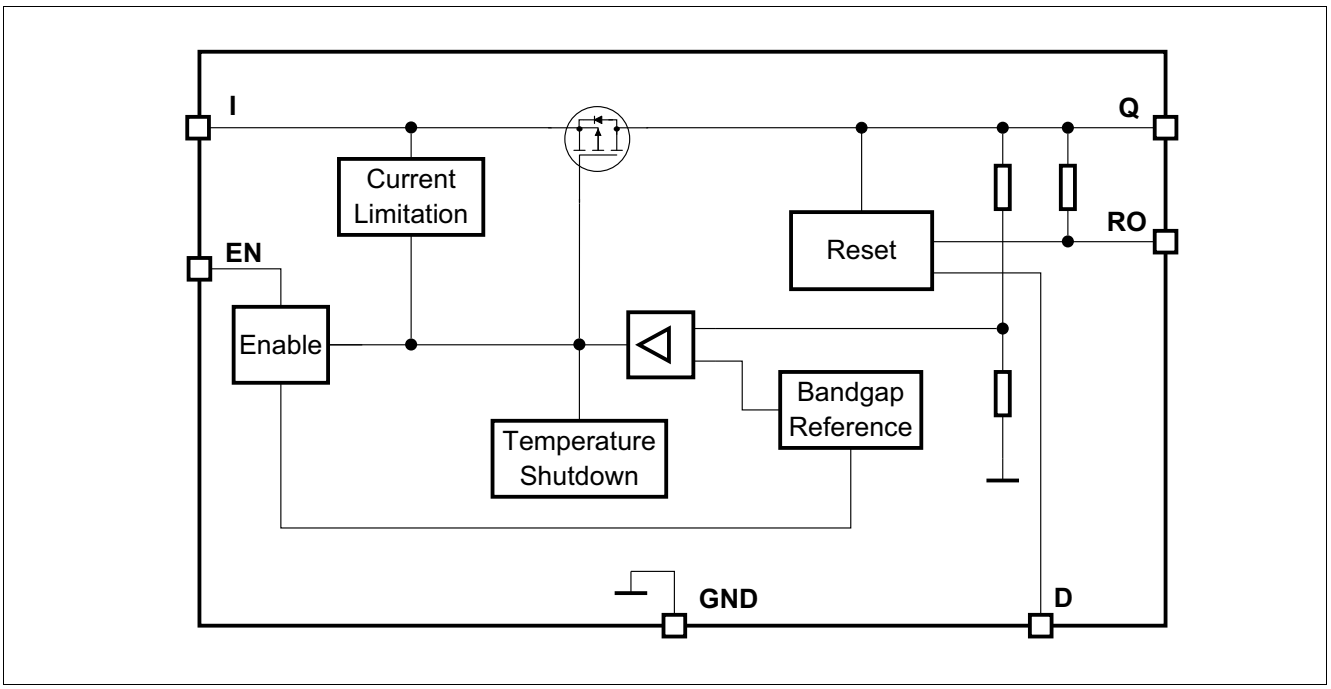

Figure 1 Block Diagram TLS810D1

3 Pin Configuration

3.1 Pin Assignment in PG-DSO-8 EP Package

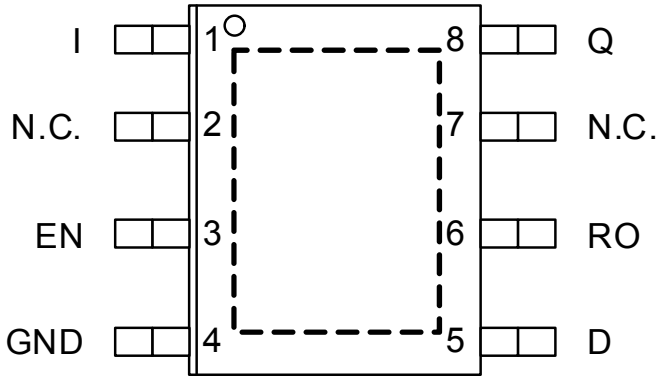

Figure 2 Pin Configuration TLS810D1 in PG-DSO-8 EP package

3.2 Pin Definitions and Functions in PG-DSO-8 EP Package

Pin	Symbol	Function
1	I	**Input** It is recommended to place a small ceramic capacitor (for example 100 nF) to GND, close to the IC terminals, in order to compensate line influences.
2	N.C.	**Not connected**
3	EN	**Enable** Integrated pull-down resistor. Enable the IC with high level input signal. Disable the IC with low level input signal.
4	GND	**Ground**
5	D	**Reset Delay Timing** Connect a ceramic capacitor to GND for adjusting the reset delay time. Leave open if the reset function is not needed.
6	RO	**Reset Output** Integrated pull-up resistor. Open collector output. Leave open if the reset function is not needed.
7	N.C.	**Not connected**

Pin	Symbol	Function
8	Q	**Output** Connect an output capacitor C_Q to GND close to the IC's terminals, respecting the values specified for its capacitance and ESR in **Table 2 "Functional Range" on Page 9**.
Pad	–	**Exposed Pad** Connect to heatsink area. Connect to GND.

3.3 Pin Assignment in PG-TSON-10 Package

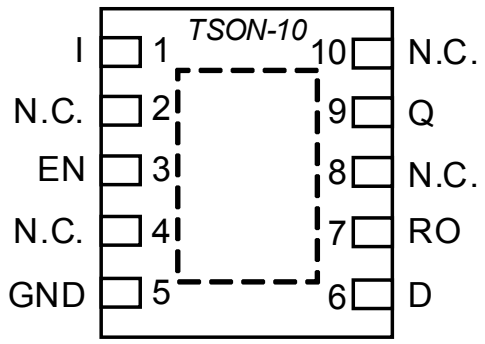

Figure 3 Pin Configuration TLS810D1 in PG-TSON-10 package

3.4 Pin Definitions and Functions in PG-TSON-10 Package

Pin	Symbol	Function
1	I	**Input** It is recommended to place a small ceramic capacitor (for example 100 nF) to GND, close to the IC terminals, in order to compensate line influences.
2	N.C.	**Not connected**
3	EN	**Enable** Integrated pull-down resistor. Enable the IC with high level input signal. Disable the IC with low level input signal.
4	N.C.	**Not connected**
5	GND	**Ground**
6	D	**Reset Delay Timing** Connect a ceramic capacitor to GND for adjusting the reset delay time. Leave open if the reset function is not needed.

Pin	Symbol	Function
7	RO	**Reset Output** Integrated pull-up resistor. Open collector output. Leave open if the reset function is not needed.
8	N.C.	**Not connected**
9	Q	**Output** Connect an output capacitor C_Q to GND close to the IC's terminals, respecting the values specified for its capacitance and ESR in **Table 2 "Functional Range" on Page 9**.
10	N.C.	**Not connected**
Pad	–	**Exposed Pad** Connect to heatsink area. Connect to GND.

4 General Product Characteristics

4.1 Absolute Maximum Ratings

Table 1 Absolute Maximum Ratings[1)]

T_j = -40°C to +150°C; all voltages with respect to ground (unless otherwise specified)

Parameter	Symbol	Values			Unit	Note or Test Condition	Number
		Min.	Typ.	Max.			
Voltage Input I, Enable EN							
Voltage	V_I, V_{EN}	-0.3	–	45	V	–	P_4.1.1
Voltage Output Q							
Voltage	V_Q	-0.3	–	7	V	–	P_4.1.2
Reset Output RO, Reset Delay D							
Voltage	V_{RO}, V_D	-0.3	–	7	V	–	P_4.1.3
Temperatures							
Junction Temperature	T_j	-40	–	150	°C	–	P_4.1.4
Storage Temperature	T_{stg}	-55	–	150	°C	–	P_4.1.5
ESD Absorption							
ESD Susceptibility to GND	$V_{ESD,HBM}$	-2	–	2	kV	HBM[2)]	P_4.1.6
ESD Susceptibility to GND	$V_{ESD,CDM}$	-750	–	750	V	CDM[3)] at all pins	P_4.1.7

1) Not subject to production test, specified by design.
2) ESD susceptibility, HBM according to ANSI/ESDA/JEDEC JS001 (1.5 kΩ, 100 pF)
3) ESD susceptibility, Charged Device Model “CDM” according JEDEC JESD22-C101

Notes

1. *Stresses above the ones listed here may cause permanent damage to the device. Exposure to absolute maximum rating conditions for extended periods may affect device reliability.*
2. *Integrated protection functions are designed to prevent IC destruction under fault conditions described in the data sheet. Fault conditions are considered as “outside” normal operating range. Protection functions are not designed for continuous repetitive operation.*

4.2 Functional Range

Table 2 Functional Range

Parameter	Symbol	Values			Unit	Note or Test Condition	Number
		Min.	Typ.	Max.			
Input Voltage Range	V_I	$V_{Q,nom}+V_{dr}$	–	42	V	–[1]	P_4.2.1
Extended Input Voltage Range	$V_{I,ext}$	2.75	–	42	V	–[2]	P_4.2.2
Enable Voltage Range	V_{EN}	0	–	42	V	–	P_4.2.3
Output Capacitor	C_Q	1	–	–	µF	–[3][4]	P_4.2.4
Output Capacitor's ESR	ESR(C_Q)	–	–	100	Ω	–[4]	P_4.2.5
Junction temperature	T_j	-40	–	150	°C	–	P_4.2.6

1) Output current is limited internally and depends on the input voltage, see Electrical Characteristics for more details.
2) When V_I is between $V_{I,ext.min}$ and $V_{Q,nom} + V_{dr}$, $V_Q = V_I - V_{dr}$. When V_I is below $V_{I,ext,min}$, V_Q can drop down to 0 V.
3) The minimum output capacitance requirement is applicable for a worst case capacitance tolerance of 30%.
4) Not subject to production testing, specified by design.

Note: Within the functional or operating range, the IC operates as described in the circuit description. The electrical characteristics are specified within the conditions given in the Electrical Characteristics table.

4.3 Thermal Resistance

*Note: This thermal data was generated in accordance with JEDEC JESD51 standards. For more information, go to **www.jedec.org**.*

Table 3 Thermal ResistanceTLS810D1 in PG-DSO-8 EP Package[1)]

Parameter	Symbol	Values			Unit	Note or Test Condition	Number
		Min.	Typ.	Max.			
Junction to Case	R_{thJC}	–	19	–	K/W	–	P_4.3.1
Junction to Ambient	R_{thJA}	–	51	–	K/W	2s2p board[2)]	P_4.3.2
Junction to Ambient	R_{thJA}	–	167	–	K/W	1s0p board, footprint only[3)]	P_4.3.3
Junction to Ambient	R_{thJA}	–	71	–	K/W	1s0p board, 300 mm^2 heatsink area on PCB[3)]	P_4.3.4
Junction to Ambient	R_{thJA}	–	60	–	K/W	1s0p board, 600 mm^2 heatsink area on PCB[3)]	P_4.3.5

1) Not subject to production test, specified by design
2) Specified R_{thJA} value is according to Jedec JESD51-2,-5,-7 at natural convection on FR4 2s2p board; The Product (Chip+Package) was simulated on a 76.2 x 114.3 x 1.5 mm^3 board with 2 inner copper layers (2 x 70µm Cu, 2 x 35µm Cu). Where applicable a thermal via array under the exposed pad contacted the first inner copper layer.
3) Specified R_{thJA} value is according to JEDEC JESD 51-3 at natural convection on FR4 1s0p board; The Product (Chip+Package) was simulated on a 76.2 × 114.3 × 1.5 mm^3 board with 1 copper layer (1 x 70µm Cu).

Table 4 Thermal Resistance TLS810D1 in PG-TSON-10 Package[1)]

Parameter	Symbol	Values			Unit	Note or Test Condition	Number
		Min.	Typ.	Max.			
Junction to Case	R_{thJC}	–	13	–	K/W	–	P_4.3.6
Junction to Ambient	R_{thJA}	–	60	–	K/W	2s2p board[2)]	P_4.3.7
Junction to Ambient	R_{thJA}	–	184	–	K/W	1s0p board, footprint only[3)]	P_4.3.8
Junction to Ambient	R_{thJA}	–	75	–	K/W	1s0p board, 300 mm^2 heatsink area on PCB[3)]	P_4.3.9
Junction to Ambient	R_{thJA}	–	64	–	K/W	1s0p board, 600 mm^2 heatsink area on PCB[3)]	P_4.3.10

1) Not subject to production test, specified by design
2) Specified R_{thJA} value is according to Jedec JESD51-2,-5,-7 at natural convection on FR4 2s2p board; The Product (Chip+Package) was simulated on a 76.2 x 114.3 x 1.5 mm^3 board with 2 inner copper layers (2 x 70µm Cu, 2 x 35µm Cu). Where applicable a thermal via array under the exposed pad contacted the first inner copper layer.
3) Specified R_{thJA} value is according to JEDEC JESD 51-3 at natural convection on FR4 1s0p board; The Product (Chip+Package) was simulated on a 76.2 × 114.3 × 1.5 mm^3 board with 1 copper layer (1 x 70µm Cu).

5 Block Description and Electrical Characteristics

5.1 Voltage Regulation

The output voltage V_Q is divided by a resistor network. This fractional voltage is compared to an internal voltage reference and the pass transistor is driven accordingly.

The control loop stability depends on the output capacitor C_Q, the load current, the chip temperature and the internal circuit structure. To ensure stable operation, the output capacitor's capacitance and its equivalent series resistor ESR requirements given in **"Functional Range" on Page 9** have to be maintained. For details see the typical performance graph **Output Capacitor Series Resistor ESR(C_Q) versus Output Current I_Q** on **Page 15**. Since the output capacitor is used to buffer load steps, it should be sized according to the application's needs.

An input capacitor C_I is not required for stability, but is recommended to compensate line fluctuations. An additional reverse polarity protection diode and a combination of several capacitors for filtering should be used, in case the input is connected directly to the battery line. Connect the capacitors close to the regulator terminals.

In order to prevent overshoots during start-up, a smooth ramping up function is implemented. This ensures almost no overshoots during start-up, mostly independent from load and output capacitance.

Whenever the load current exceeds the specified limit, for example in case of a short circuit, the output current is limited and the output voltage decreases.

The overtemperature shutdown circuit prevents the IC from immediate destruction under fault conditions (for example output continuously short-circuit) by switching off the power stage. After the chip has cooled down, the regulator restarts. This oscillatory thermal behaviour causes the junction temperature to exceed the maximum rating of 150°C and can significantly reduce the IC's lifetime.

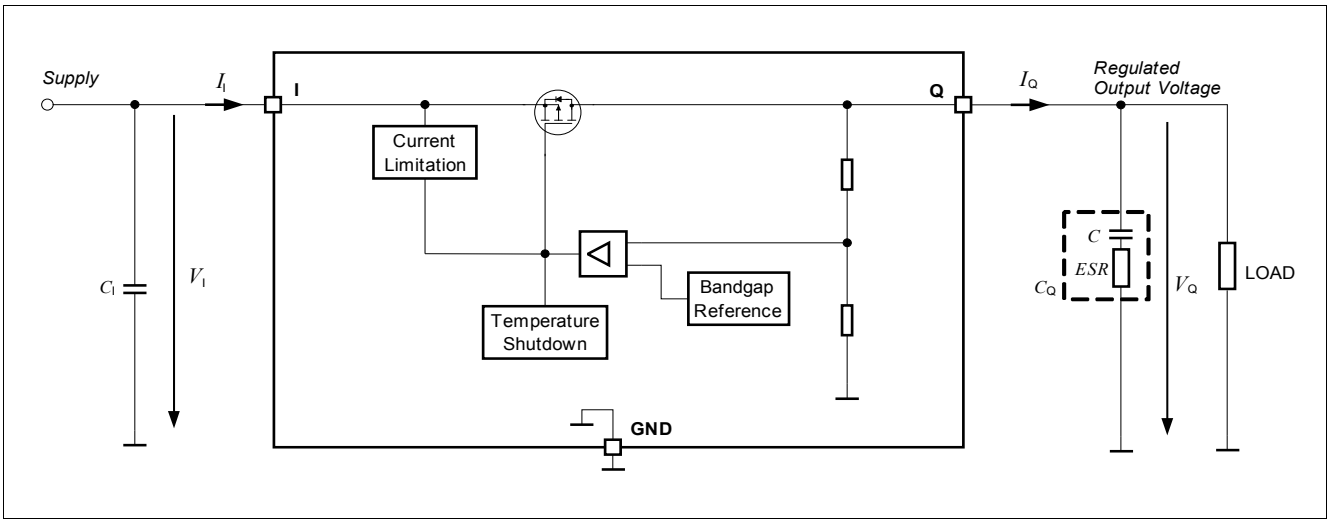

Figure 4 Block Diagram Voltage Regulation

Table 5 Electrical Characteristics

T_j = -40°C to +150°C, V_I = 13.5 V, all voltages with respect to ground (unless otherwise specified).
Typical values are given at T_j = 25°C, V_I = 13.5 V.

Parameter	Symbol	Values			Unit	Note or Test Condition	Number
		Min.	Typ.	Max.			
Output Voltage Precision	V_Q	3.23	3.30	3.37	V	50 µA ≤ I_Q ≤ 100 mA, 4 V ≤ V_I ≤ 28 V	P_5.1.1
Output Voltage Precision	V_Q	3.23	3.30	3.37	V	50 µA ≤ I_Q ≤ 50 mA, 4 V ≤ V_I ≤ 42 V	P_5.1.2
Output Current Limitation	$I_{Q,lim}$	110	190	260	mA	0 V ≤ V_Q ≤ $V_{Q,nom}$ - 0.1 V	P_5.1.3
Line Regulation steady-state	$\Delta V_{Q,line}$	–	1	20	mV	I_Q = 1 mA, 6 V ≤ V_I ≤ 32 V	P_5.1.4
Load Regulation steady-state	$\Delta V_{Q,load}$	-20	-1	–	mV	V_I = 6 V, 50 µA ≤ I_Q ≤ 100 mA	P_5.1.5
Dropout Voltage[1] $V_{dr} = V_I - V_Q$	V_{dr}	–	250	650	mV	I_Q = 100 mA	P_5.1.6
Ripple Rejection[2]	*PSRR*	–	60	–	dB	I_Q = 50 mA, f_{ripple} = 100 Hz, V_{ripple} = 0.5 V_{p-p}	P_5.1.7
Overtemperature Shutdown Threshold[2]	$T_{j,sd}$	151	175	–	°C	T_j increasing	P_5.1.8
Overtemperature Shutdown Threshold Hysteresis[2]	$T_{j,sdh}$	–	10	–	K	T_j decreasing	P_5.1.9

1) Measured when the output voltage V_Q has dropped 100 mV from the nominal value obtained at V_I = 13.5V
2) Not subject to production test, specified by design

5.2 Typical Performance Characteristics Voltage Regulation

Output Voltage V_Q versus Junction Temperature T_j

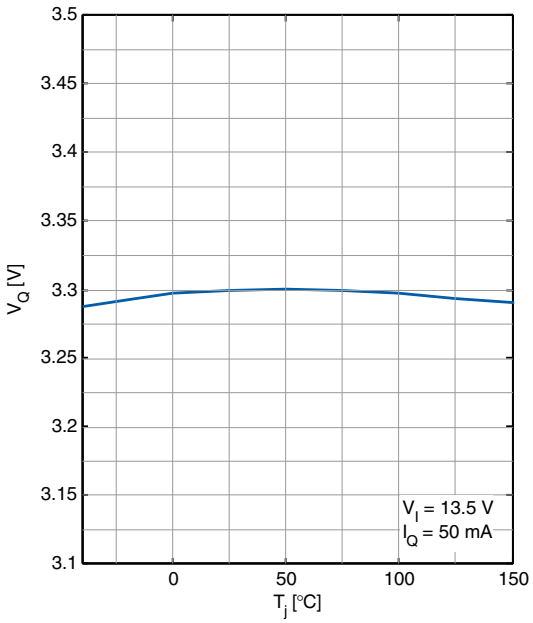

Output Current I_Q versus Input Voltage V_I

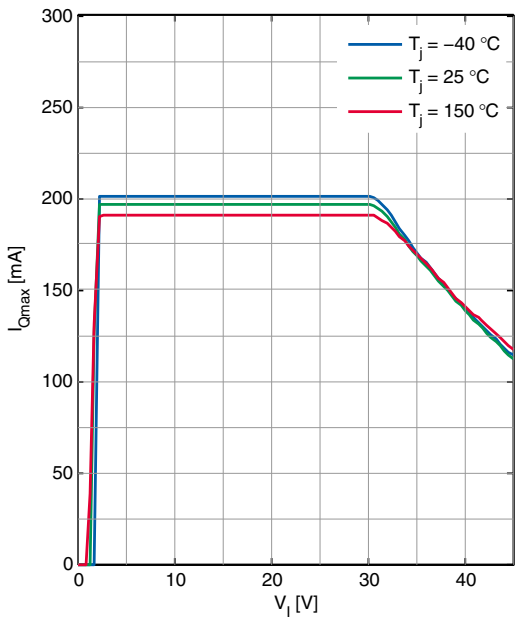

Dropout Voltage V_{dr} versus Junction Temperature T_j

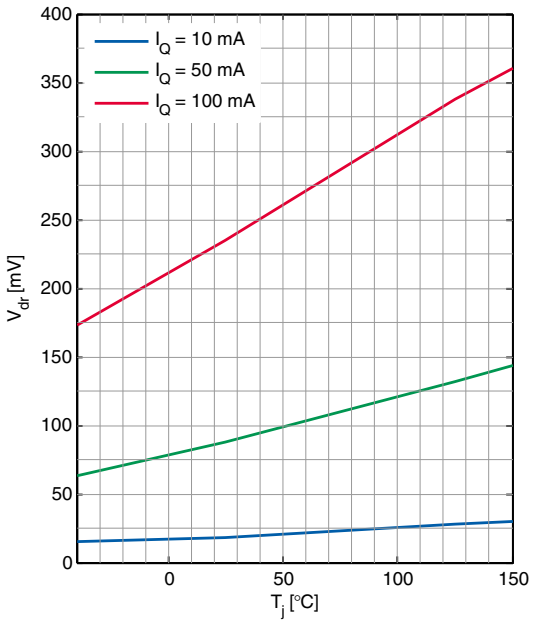

Dropout Voltage V_{dr} versus Output Current I_Q

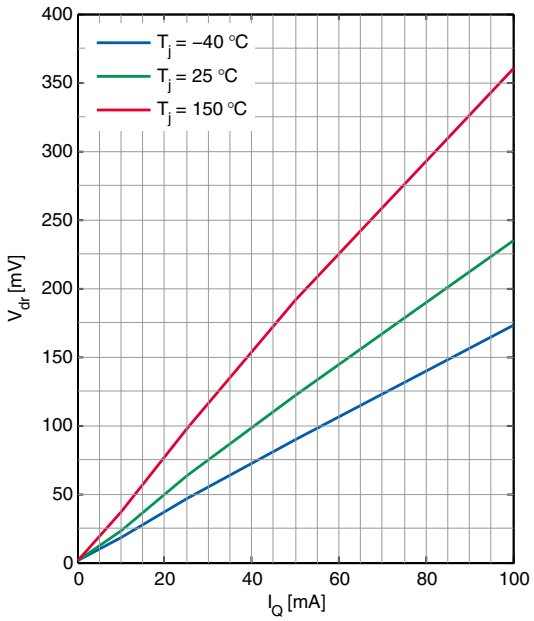

Load Regulation $\Delta V_{Q,load}$ versus Output Current I_Q

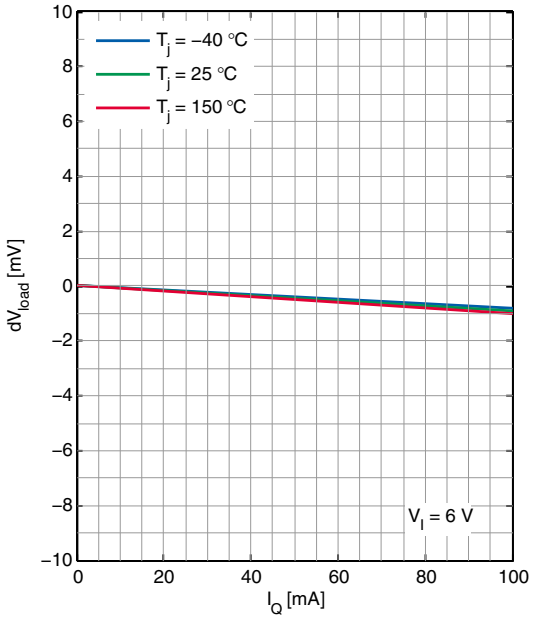

Line Regulation $\Delta V_{Q,line}$ versus Input Voltage V_I

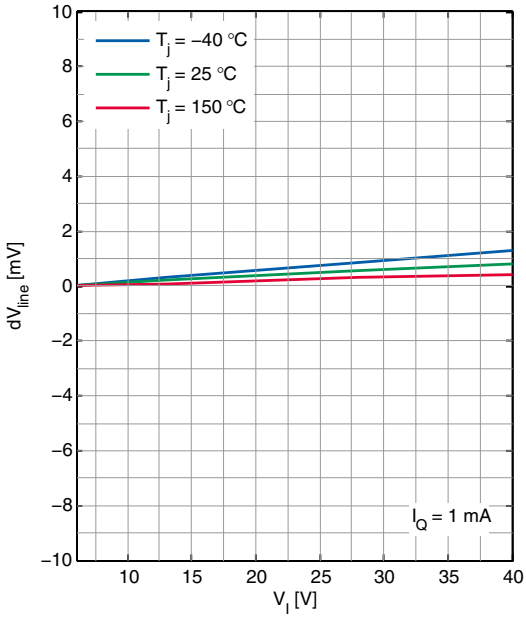

Output Voltage V_Q versus Input Voltage V_I

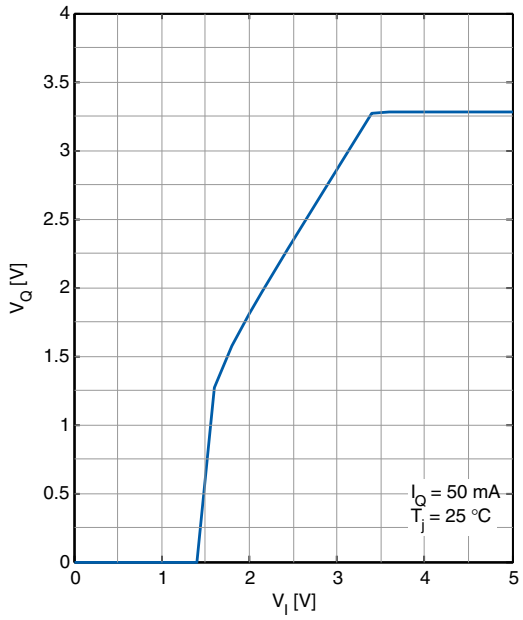

Power Supply Ripple Rejection *PSRR* versus ripple frequency f_r

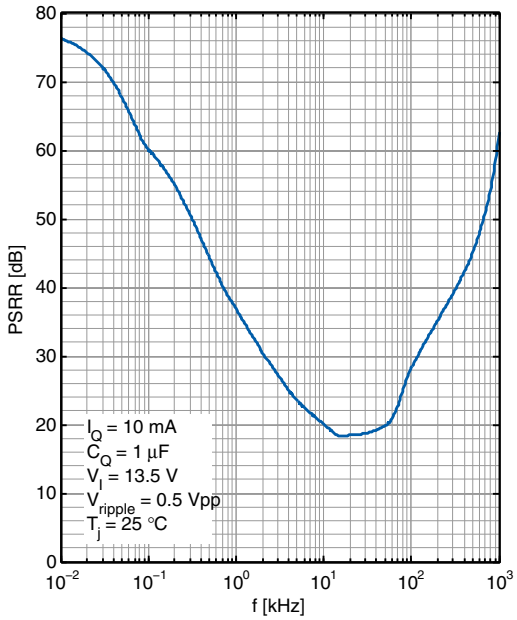

Output Capacitor Series Resistor *ESR*(C_Q) versus Output Current I_Q

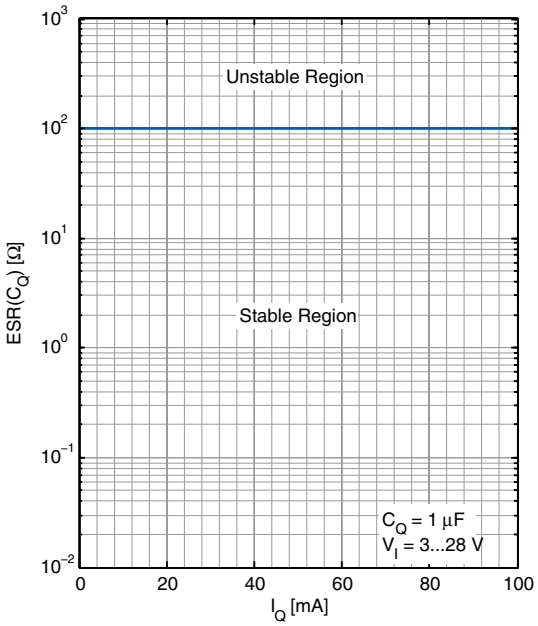

5.3 Current Consumption

Table 6 Electrical Characteristics Current Consumption

T_j = -40°C to +150°C, V_I = 13.5 V (unless otherwise specified).

Parameter	Symbol	Values			Unit	Note or Test Condition	Number
		Min.	Typ.	Max.			
Current Consumption $I_q = I_I$	$I_{q,off}$	–	–	1	µA	$V_{EN} \leq 0.4$ V, $T_j < 105$°C	P_5.3.1
Current Consumption $I_q = I_I - I_Q$	I_q	–	9	11.5	µA	$I_Q = 50$ µA, $T_j = 25$°C	P_5.3.2
Current Consumption $I_q = I_I - I_Q$	I_q	–	11.5	14.5	µA	$I_Q = 50$ µA, $T_j < 105$°C	P_5.3.3
Current Consumption $I_q = I_I - I_Q$	I_q	–	12	16	µA	$I_Q = 50$ µA, $T_j < 125$°C	P_5.3.4
Current Consumption $I_q = I_I - I_Q$	I_q	–	12	16	µA	$I_Q = 100$ mA, $T_j < 125$°C	P_5.3.5

5.4 Typical Performance Characteristics Current Consumption

Current Consumption I_q versus Output Current I_Q

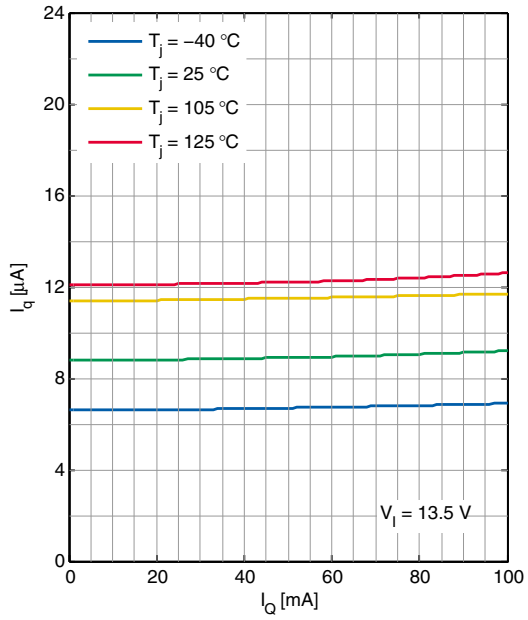

Current Consumption I_q versus Input Voltage V_I

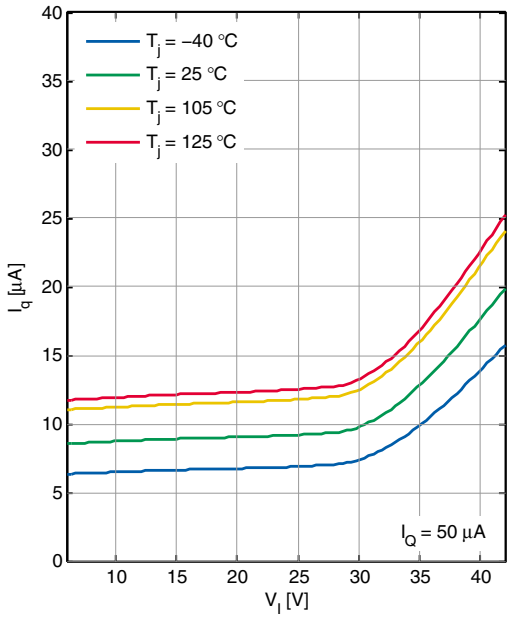

Current Consumption I_q versus Junction Temperature T_j

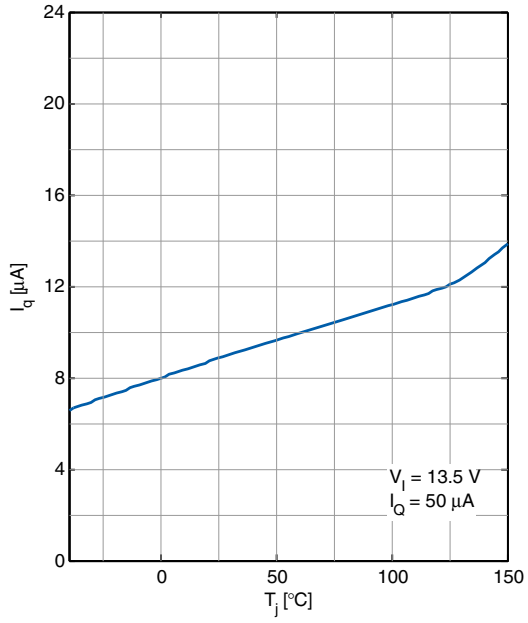

Current Consumption in OFF mode $I_{q,off}$ versus Junction Temperature T_j

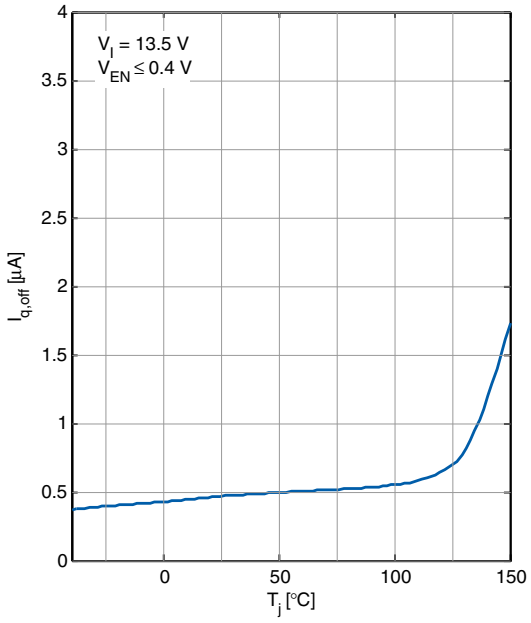

5.5 Enable

The device can be switched on and off by the Enable feature. Connect a HIGH level as specified below (for example the battery voltage) to pin EN to enable the device; connect a LOW level as specified below (for example GND) to switch it off. The Enable function has a build-in hysteresis to avoid toggling between ON/OFF state, if signals with slow slopes are appiled to the EN input.

Table 7 Electrical Characteristics Enable

T_j = -40°C to +150°C, V_I = 13.5 V, all voltages with respect to ground (unless otherwise specified).
Typical values are given at T_j = 25°C, V_I = 13.5 V.

Parameter	Symbol	Values			Unit	Note or Test Condition	Number
		Min.	Typ.	Max.			
Enable High Level Input Voltage	$V_{EN,H}$	2	–	–	V	V_Q settled	P_5.5.1
Enable Low Level Input Voltage	$V_{EN,L}$	–	–	0.8	V	$V_Q \leq 0.1$ V	P_5.5.2
Enable High Level Input Current	$I_{EN,H}$	–	–	4	µA	V_{EN} = 5 V	P_5.5.3
Enable Internal Pull-down Resistor	R_{EN}	1.25	2	3.5	MΩ	–	P_5.5.4

5.6 Typical Performance Characteristics Enable

Enable Input Current I_{EN} versus Enable Input Voltage V_{EN}

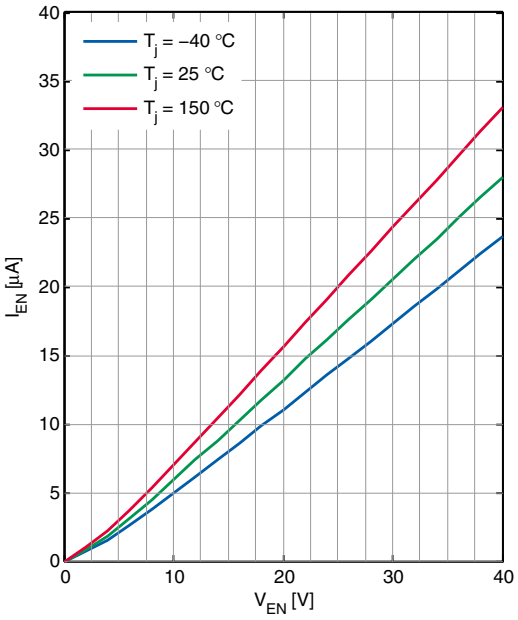

5.7 Reset Function

The reset function provides several features:

Output Undervoltage Reset

An output undervoltage condition is indicated by setting the Reset Output RO to “low”. This signal may be used to reset a microcontroller during low supply voltage.

Power-On Reset Delay Time

The power-on reset delay time t_{rd} allows microcontoller and oscillator to start up. This delay time is the time frame from exceeding the reset switching threshold V_{RT} until the reset is released by switching the reset output “RO” from “low” to “high”. The power-on reset delay time trd is defined by an external delay capacitor C_D connected to pin D charged by the delay capacitor charge current $I_{D,ch}$ starting from $V_D = 0$ V.

If the application needs a power-on reset delay time t_{rd} different from the value given in **Table 8**, the delay capacitor’s value can be derived from the specified value and the desired power-on delay time:

$$C_D = \frac{t_{rd,new}}{t_{rd}} \bullet 100\,\text{nF} \tag{5.1}$$

with

- C_D: capacitance of the delay capacitor to be chosen
- $t_{rd,new}$: desired power-on reset delay time
- t_{rd}: power-on reset delay time specified in this datasheet

For a precise calculation also take the delay capacitor’s tolerance into consideration.

Reset Reaction Time

The reset reaction time avoids that short undervoltage spikes trigger an unwanted reset “low” signal. The reset reaction rime t_{rr} considers the internal reaction time $t_{rr,int}$ and the discharge time $t_{rr,d}$ defined by the external delay capacitor C_D (see typical performance graph for details). Hence, the total reset reaction time becomes:

$$t_{rr} = t_{rr,int} + t_{rr,d} \tag{5.2}$$

with

- t_{rr}: reset reaction time
- $t_{rr,int}$: internal reset reaction time
- $t_{rr,d}$: reset discharge

Optional Reset Output Pull-Up Resistor $R_{RO,ext}$

The Reset Output RO is an open collector output with an integrated pull-up resistor. If needed, an external pull-up resistor to the output Q can be added. In **Table 8** a minimum value for the external resistor $R_{RO,ext}$ is given.

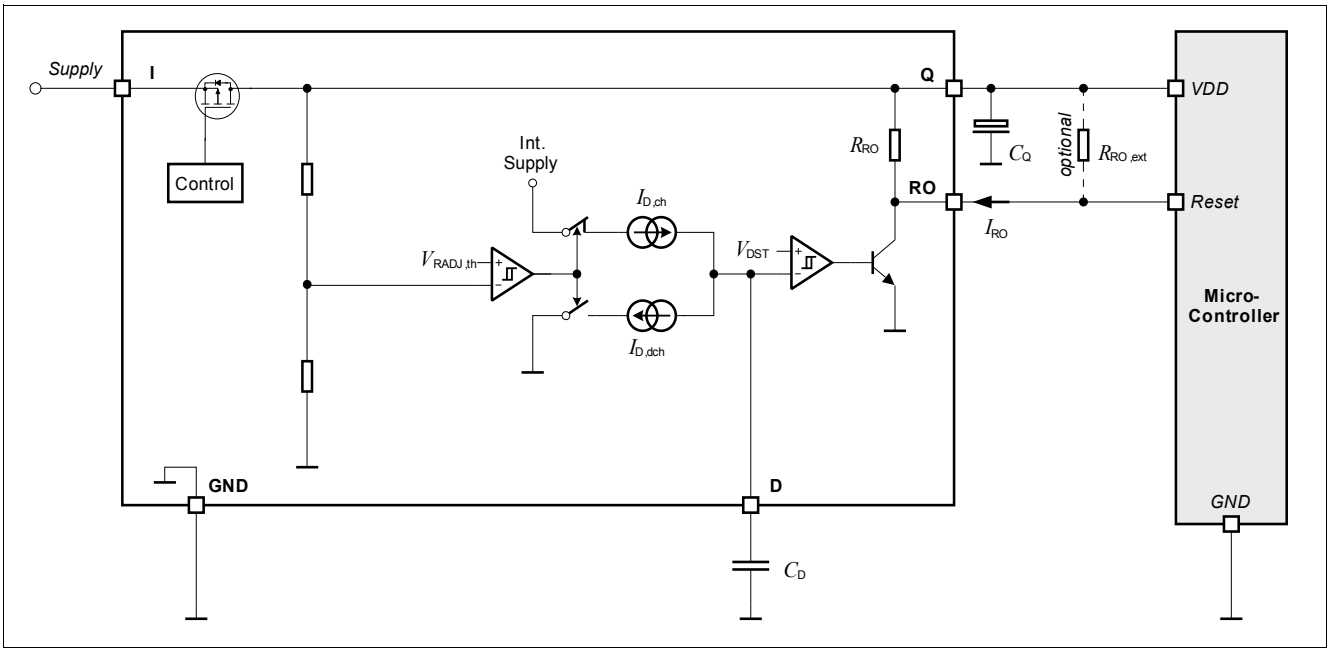

Figure 5 Block Diagram Reset Function

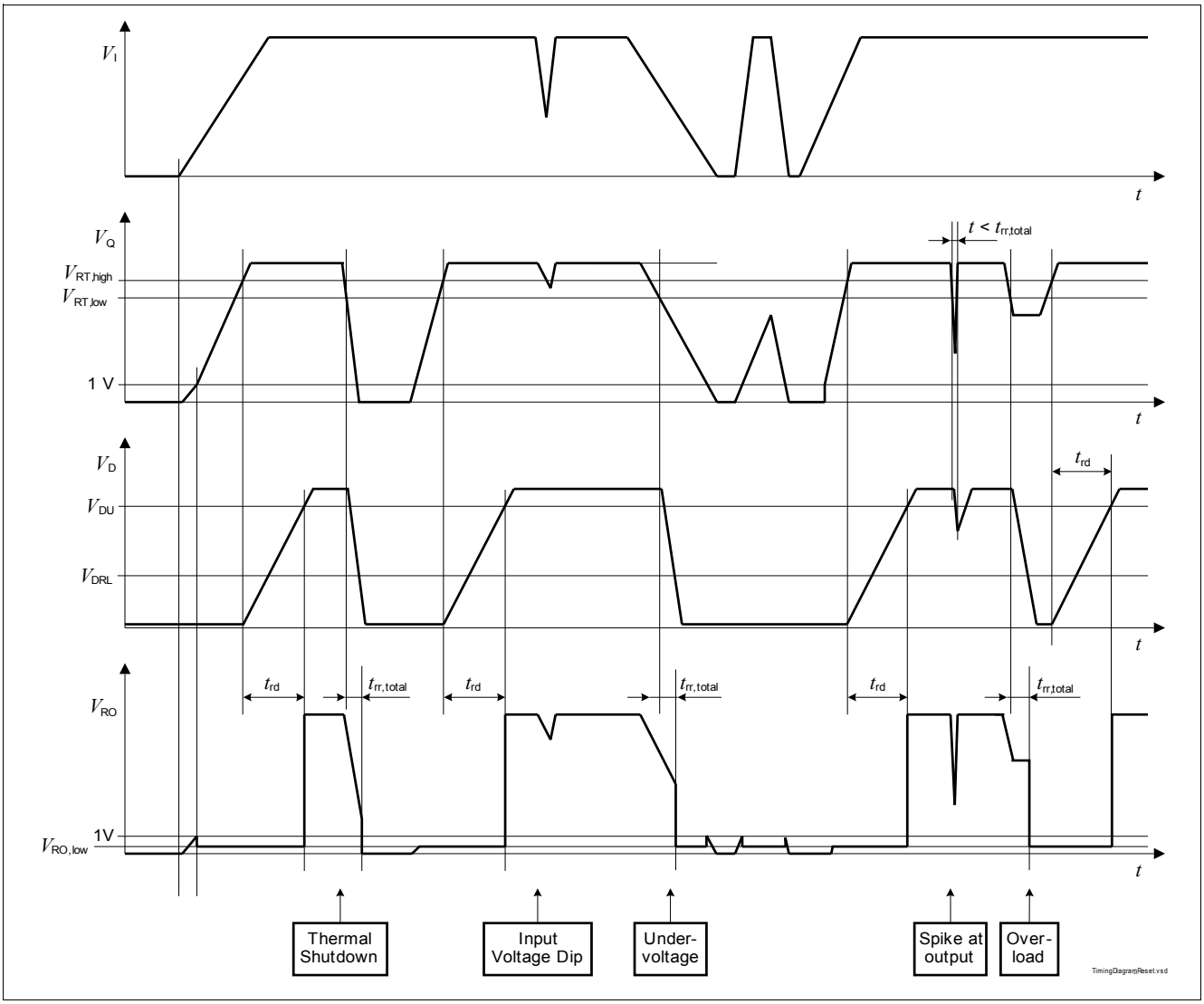

Figure 6 Timing Diagram Reset

Table 8 Electrical Characteristics Reset

T_j = -40°C to +150°C, V_I = 13.5 V, all voltages with respect to ground (unless otherwise specified).
Typical values are given at T_j = 25°C, V_I = 13.5 V.

Parameter	Symbol	Values			Unit	Note or Test Condition	Number
		Min.	Typ.	Max.			
Output Undervoltage Reset							
Output Undervoltage Reset Upper Switching Threshold	$V_{RT,high}$	3.03	3.10	3.17	V	V_Q increasing, $V_{EN} \geq 2.0$ V	P_5.7.1
Output Undervoltage Reset Lower Switching Threshold	$V_{RT,low}$	2.97	3.03	3.10	V	V_Q decreasing, $V_{EN} \geq 2.0$ V	P_5.7.2
Reset Output RO							
Reset Output Low Voltage	$V_{RO,low}$	0	0.2	0.4	V	$1\ V \leq V_Q \leq V_{RT}$; $R_{RO} > 4.7\ k\Omega$	P_5.7.3

Table 8 Electrical Characteristics Reset (cont'd)

T_j = -40°C to +150°C, V_I = 13.5 V, all voltages with respect to ground (unless otherwise specified).
Typical values are given at T_j = 25°C, V_I = 13.5 V.

Parameter	Symbol	Values			Unit	Note or Test Condition	Number
		Min.	Typ.	Max.			
Reset Output Internal Pull-Up Resistor	$R_{RO,int}$	13	20	36	kΩ	Internally connected to Q	P_5.7.4
Reset Output External Pull-up Resistor to V_Q	$R_{RO,ext}$	4.7	–	–	kΩ	1 V ≤ V_Q ≤ V_{RT}; V_{RO} ≤ 0.4 V	P_5.7.5
Reset Delay Timing							
Power On Reset Delay Time	t_{rd}	17	25	37	ms	C_D = 100 nF Calculated vaule	P_5.7.6
Upper Delay Switching Threshold	V_{DU}	–	0.9	–	V	–	P_5.7.7
Lower Delay Switching Threshold	V_{DL}	–	0.6	–	V	–	P_5.7.8
Delay Capacitor Charge Current	$I_{D,ch}$	–	3.6	–	µA	V_D = 1 V	P_5.7.9
Delay Capacitor Discharge Current	$I_{D,dch}$	–	250	–	mA	V_D = 1 V	P_5.7.10
Delay Capacitor Discharge Time	$t_{rr,d}$	–	2	4	µs	C_D = 100 nF Calculated value	P_5.7.11
Internal Reset Reaction Time[1)]	$t_{rr,int}$	–	8	14	µs	C_D = 0 nF	P_5.7.12
Reset Reaction Time	$t_{rr,total}$	–	10	18	µs	C_D = 100 nF Calculated value	P_5.7.13

1) Parameter not subject to production test; specified by design.

5.8 Typical Performance Characteristics Reset

Typical Performance Characteristics

Undervoltage Reset Threshold V_{RT} versus Junction Temperature T_j

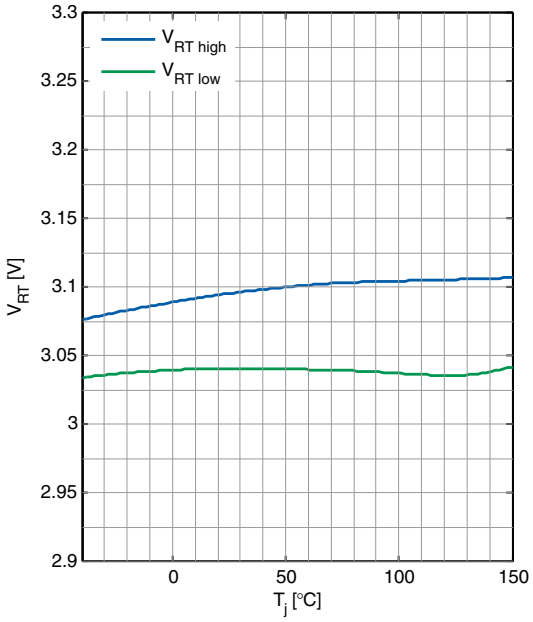

Power On Reset Delay Time t_{rd} versus Junction Temperature T_j

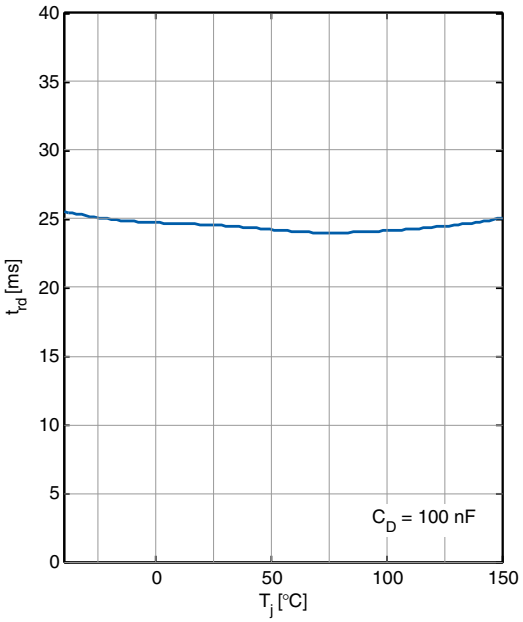

Internal Reset Reaction Time $t_{rr,int}$ versus Junction Temperature T_j

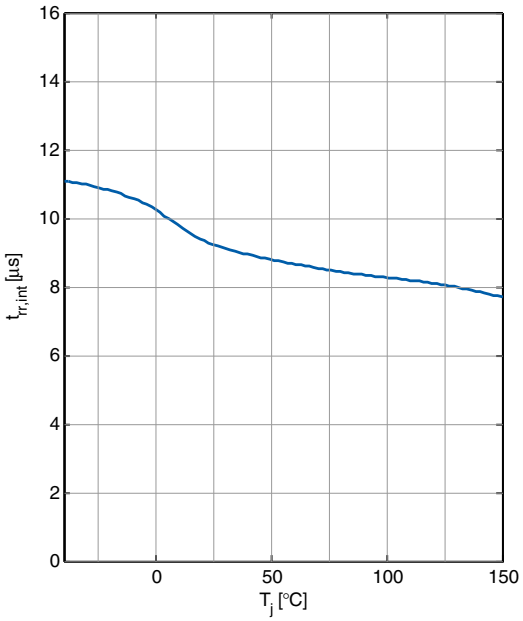

6 Application Information

Note: The following information is given as a hint for the implementation of the device only and shall not be regarded as a description or warranty of a certain functionality, condition or quality of the device.

6.1 Application Diagram

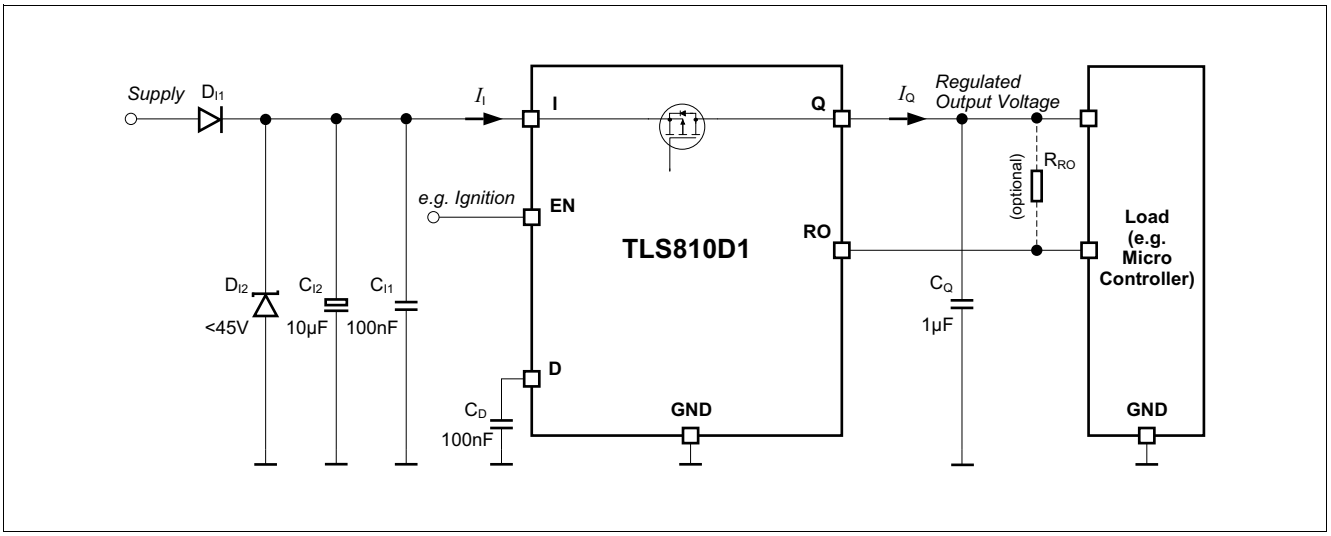

Figure 7 Application Diagram

6.2 Selection of External Components

6.2.1 Input Pin

The typical input circuitry for a linear voltage regulator is shown in the application diagram above.

A ceramic capacitor at the input, in the range of 100 nF to 470 nF, is recommended to filter out the high frequency disturbances imposed by the line for example ISO pulses 3a/b. This capacitor must be placed very close to the input pin of the linear voltage regulator on the PCB.

An aluminum electrolytic capacitor in the range of 10 µF to 470 µF is recommended as an input buffer to smooth out high energy pulses, such as ISO pulse 2a. This capacitor should be placed close to the input pin of the linear voltage regulator on the PCB.

An overvoltage suppressor diode can be used to further suppress any high voltage beyond the maximum rating of the linear voltage regulator and protect the device against any damage due to over-voltage.

The external components at the input are not mandatory for the operation of the voltage regulator, but they are recommended in case of possible external disturbances.

6.2.2 Output Pin

An output capacitor is mandatory for the stability of linear voltage regulators.

The requirement to the output capacitor is given in **"Functional Range" on Page 9**. The graph **Output Capacitor Series Resistor ESR(C_Q) versus Output Current I_Q** on **Page 15** shows the stable operation range of the device.

TLS810D1 is designed to be stable with extremely low ESR capacitors. According to the automotive environment, ceramic capacitors with X5R or X7R dielectrics are recommended.

The output capacitor should be placed as close as possible to the regulator's output and GND pins and on the same side of the PCB as the regulator itself.

In case of rapid transients of input voltage or load current, the capacitance should be dimensioned in accordance and verified in the real application that the output stability requirements are fulfilled.

6.3 Thermal Considerations

Knowing the input voltage, the output voltage and the load profile of the application, the total power dissipation can be calculated:

$$P_D = (V_I - V_Q) \times I_Q + V_I \times I_q \tag{6.1}$$

with

- P_D: continuous power dissipation
- V_I: input voltage
- V_Q: output voltage
- I_Q: output current
- I_q: quiescent current

The maximum acceptable thermal resistance R_{thJA} can then be calculated:

$$R_{thJA,\,max} = \frac{T_{j,\,max} - T_a}{P_D} \tag{6.2}$$

with

- $T_{j,max}$: maximum allowed junction temperature
- T_a: ambient temperature

Based on the above calculation the proper PCB type and the necessary heat sink area can be determined with reference to the specification in **"Thermal Resistance" on Page 10**.

Example

Application conditions:

V_I= 13.5 V

V_Q= 3.3 V

I_Q= 70 mA

T_a= 105°C

Calculation of $R_{thJA,max}$:

P_D= (V_I – V_Q) x I_Q + V_I x I_q

= (13.5 V – 3.3 V) x 70 mA + 13.5 V x 0.012 mA

= 0.714 W

$R_{thJA,max} = (T_{j,max} - T_a) / P_D$

= (150°C – 105°C) / 0.714 W

= 63.03 K/W

As a result, the PCB design must ensure a thermal resistance R_{thJA} lower than 63.03 K/W. According to **"Thermal Resistance" on Page 10**, the 2s2p board can be used. Using the FR4 1s0p board with PG-DSO-8 EP, at least 600 mm^2 heatsink area is required.

6.4 Reverse Polarity Protection

TLS810D1 is not self protected against reverse polarity faults. To protect the device against negative supply voltage, an external reverse polarity diode is needed, as shown in **Figure 7**. The absolute maximum ratings of the device as specified in **"Absolute Maximum Ratings" on Page 8** must be kept.

6.5 Further Application Information

- For further information you may contact **http://www.infineon.com/**

7 Package Outlines

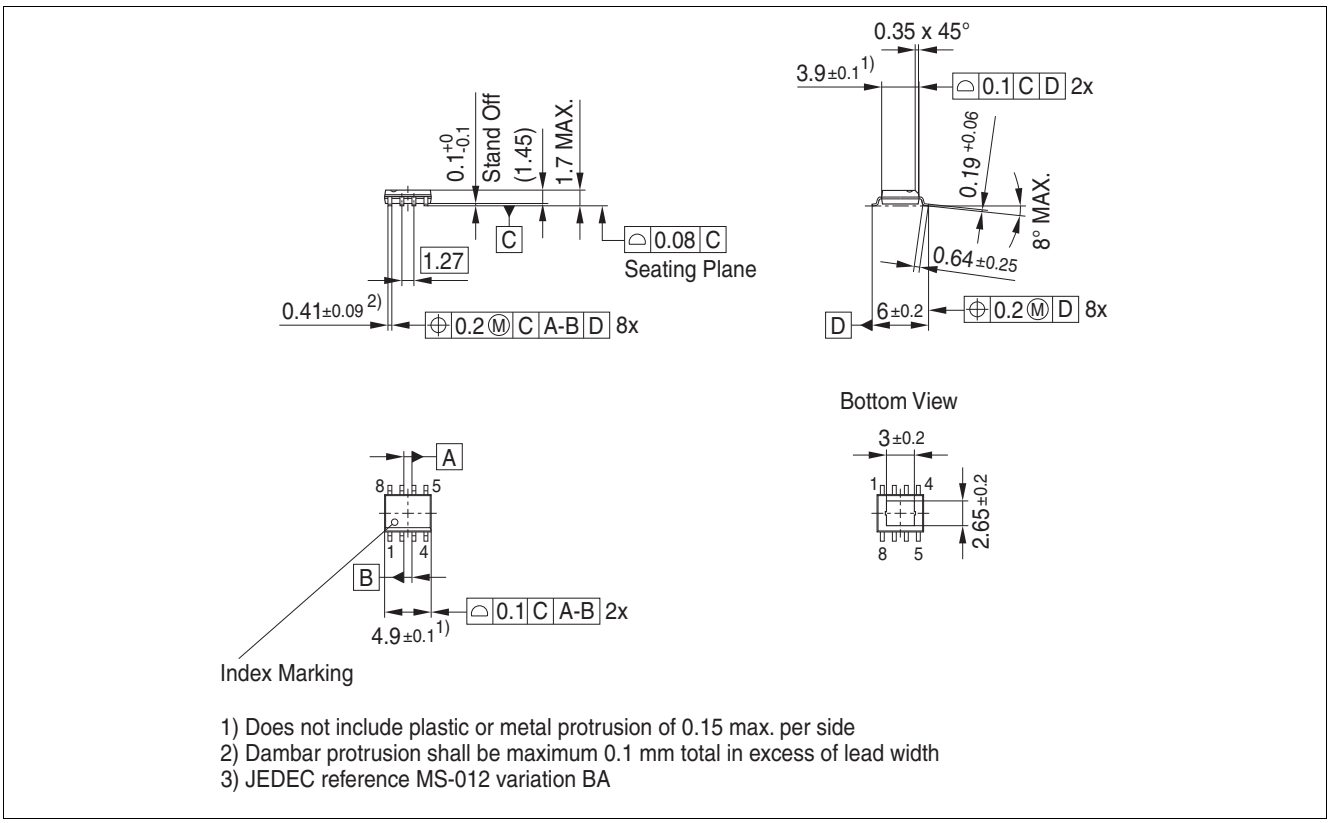

Figure 8 PG-DSO-8 EP

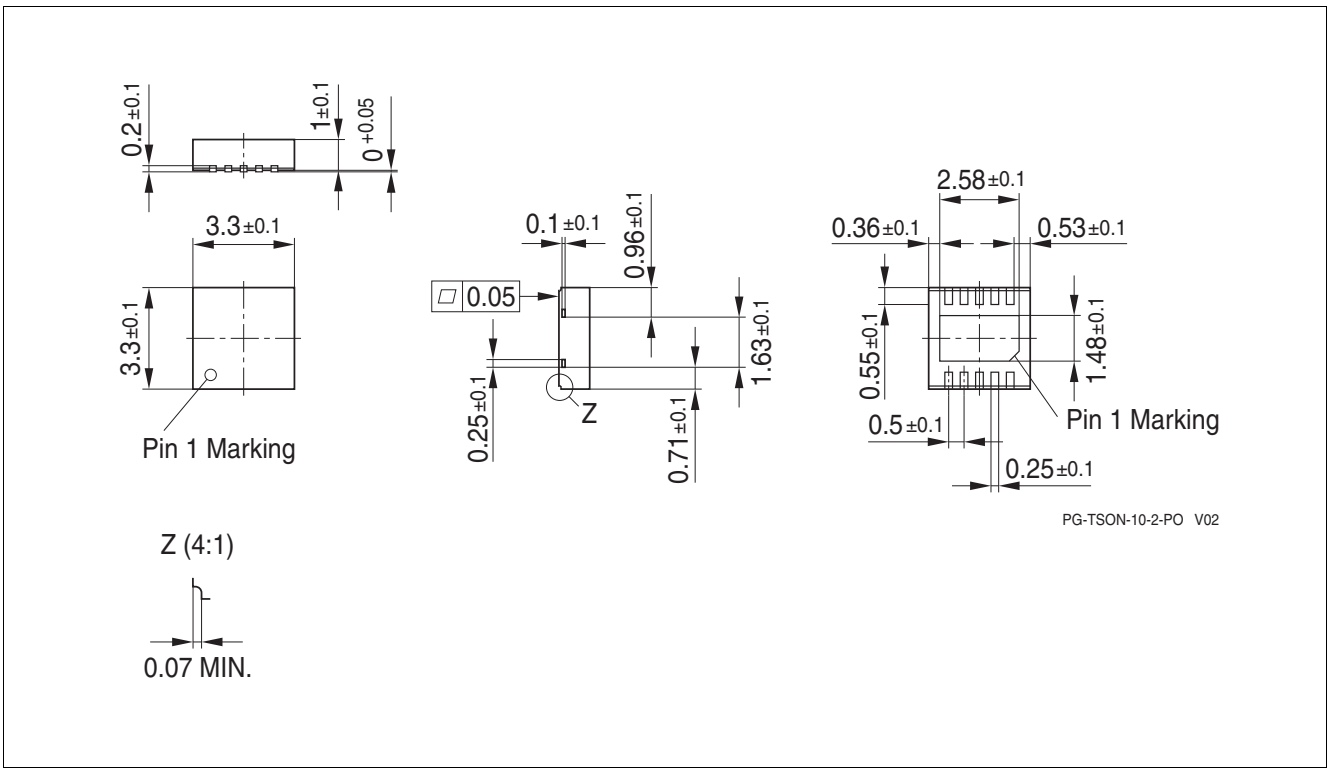

Figure 9 PG-TSON-10

Green Product (RoHS compliant)

To meet the world-wide customer requirements for environmentally friendly products and to be compliant with government regulations the device is available as a green product. Green products are RoHS-Compliant (i.e Pb-free finish on leads and suitable for Pb-free soldering according to IPC/JEDEC J-STD-020).

For further information on alternative packages, please visit our website:
http://www.infineon.com/packages.

Dimensions in mm

8 Revision History

Revision	Date	Changes
1.1	2016-12-20	Template updated
1.0	2016-10-19	Datasheet - Initial version

Trademarks of Infineon Technologies AG
µHVIC™, µIPM™, µPFC™, AU-ConvertIR™, AURIX™, C166™, CanPAK™, CIPOS™, CIPURSE™, CoolDP™, CoolGaN™, COOLiR™, CoolMOS™, CoolSET™, CoolSiC™, DAVE™, DI-POL™, DirectFET™, DrBlade™, EasyPIM™, EconoBRIDGE™, EconoDUAL™, EconoPACK™, EconoPIM™, EiceDRIVER™, eupec™, FCOS™, GaNpowIR™, HEXFET™, HITFET™, HybridPACK™, iMOTION™, IRAM™, ISOFACE™, IsoPACK™, LEDrivIR™, LITIX™, MIPAQ™, ModSTACK™, my-d™, NovalithIC™, OPTIGA™, OptiMOS™, ORIGA™, PowIRaudio™, PowIRStage™, PrimePACK™, PrimeSTACK™, PROFET™, PRO-SIL™, RASIC™, REAL3™, SmartLEWIS™, SOLID FLASH™, SPOC™, StrongIRFET™, SupIRBuck™, TEMPFET™, TRENCHSTOP™, TriCore™, UHVIC™, XHP™, XMC™.

Trademarks updated November 2015

Other Trademarks
All referenced product or service names and trademarks are the property of their respective owners.

Edition 2016-12-20
Published by
Infineon Technologies AG
81726 Munich, Germany

© 2016 Infineon Technologies AG.
All Rights Reserved.

Do you have a question about any aspect of this document?
Email: erratum@infineon.com

IMPORTANT NOTICE
The information given in this document shall in no event be regarded as a guarantee of conditions or characteristics ("Beschaffenheitsgarantie").
With respect to any examples, hints or any typical values stated herein and/or any information regarding the application of the product, Infineon Technologies hereby disclaims any and all warranties and liabilities of any kind, including without limitation warranties of non-infringement of intellectual property rights of any third party.
In addition, any information given in this document is subject to customer's compliance with its obligations stated in this document and any applicable legal requirements, norms and standards concerning customer's products and any use of the product of Infineon Technologies in customer's applications.
The data contained in this document is exclusively intended for technically trained staff. It is the responsibility of customer's technical departments to evaluate the suitability of the product for the intended application and the completeness of the product information given in this document with respect to such application.

For further information on technology, delivery terms and conditions and prices, please contact the nearest Infineon Technologies Office (**www.infineon.com**).

WARNINGS
Due to technical requirements products may contain dangerous substances. For information on the types in question please contact your nearest Infineon Technologies office.

Except as otherwise explicitly approved by Infineon Technologies in a written document signed by authorized representatives of Infineon Technologies, Infineon Technologies' products may not be used in any applications where a failure of the product or any consequences of the use thereof can reasonably be expected to result in personal injury.