Features and Benefits

- 6 sense Channels
- Large supply current + supply voltage range for maximum contact cleaning
- Applicable with all 2-wire Hall effect switches
- Diagnoses open wires, shorts to Supplies and shorts between wires
  - Current and Voltage measurement mode
  - High measurement accuracy: 5%
- Current limited supply regulator
- Automotive qualified (40V Load Dump)
- Over-temperature detection
- Small Package: narrow body (150mils) SO16, RoHS compliant

Applications

- General Fail safe read out of safety interlock switches to
  - Detect human action
  - Verify solenoid/motor actuation
- Automotive applications
  - Next to the Safety ECU: interlock switch sensor supply and sensor I/F
    - Seat belt buckle
    - Seat occupancy mat
    - Air bag presence detection
    - Seat position switch
    - Airbag disable switch
  - Next to Smart Junction Box / Body Control Module: Contact monitoring
    - Foot Brake pressed detection
    - Park position of the automatic transmission
    - Door lock position
    - …
  - Analog Mux
    - Resistive coded rotary encoder
    - Fuel run dry switch
    - Seat Heater switch
    - …
- Industrial applications:
  - Industrial Security doors and machine guarding
  - General 2 wire analog sensors :
    - Industrial pressure, strain gauge, … sensors (ref. MLX90308, MLX90314)

Ordering Information

Part No.	Temperature Suffix	Package Code
MLX16305	E (-40°C to 90°C)	DC (SOIC16 150mil)

1. Overview application Schematic

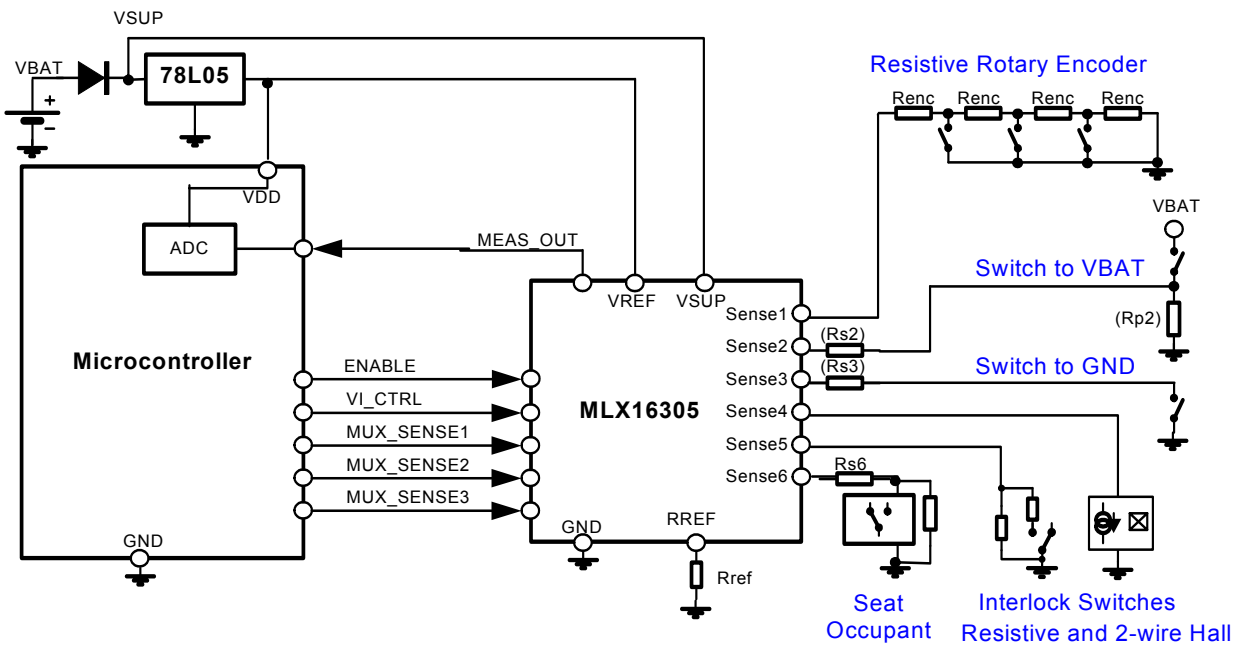

2. Description

The MLX16305 is designed to diagnose the state of remote interlock switches in automotive safety applications. Its high accuracy allows it to be applied in a broad range of related automotive and industrial applications using current modulated sensors and switches.
The MLX16305 includes a current-limited regulated supply that is applied to one channel (switch/sensor) at a time. The supplied current or the resulting supply voltage are measured and presented as an analog voltage to the microcontroller for interpretation.
Each MLX16305 allows scanning up to 6 switches for changes in switch state, and for any type of short/open circuit failure mode. The range of switches can easily be extended by adding other MLX16305 devices in parallel on the same microcontroller ADC input.
The high current and voltage range allow maximum contact cleaning energy for resistive switches. The high accuracy allows monitoring of contact ageing and early failures detection.

TABLE OF CONTENTS

FEATURES AND BENEFITS 1
APPLICATIONS 1
ORDERING INFORMATION 1
1. OVERVIEW APPLICATION SCHEMATIC 1-2
2. DESCRIPTION 2-2
3. ABSOLUTE MAXIMUM RATINGS 4
4. MLX16305 ELECTRICAL SPECIFICATIONS 4
5. PIN ASSIGNMENT 5
6. BLOCK DIAGRAM 6
7. GENERAL DESCRIPTION 7
8. PIN DESCRIPTION 7
8.1. SUPPLY RANGE (VSUP) 7
8.2. INPUT VOLTAGE REFERENCE (VREF) 7
8.3. VOLTAGE REGULATION (SENSE) 8
8.4. OUTPUT VOLTAGE TO THE MICROCONTROLLER ADC (MEAS_OUT) 8
8.5. DIGITAL INPUTS 9
8.6. ENCODER: INTERNAL DIGITAL SIGNALS 10
9. VOLTAGE MODE (VM) 13
10. CURRENT MODE (CM) 14
10.1. CURRENT TO VOLTAGE CONVERSION PRINCIPLE 14
10.2. THE ACTUAL MEASUREMENT 14
10.3. HOW TO DO AN OFFSET CURRENT MEASUREMENT 15
10.4. MEASUREMENT ERRORS 16
11. HOW TO PREDICT THE SYSTEM OPERATING ZONE 17
11.1. VMEASOUT LIMITS 17
11.2. ISENSE LIMITS 17
12. OVERCURRENT LIMITATION 18
13. OVERTEMPERATURE DETECTION 19
13.1. OVERTEMPERATURE CONSIDERATIONS 20
14. DIAGNOSTICS 21
14.1. SHORTS 21
14.2. OPEN WIRE 21
14.3. DIAGNOSTICS FLOW 22
15. MULTIPLEXING THE ADC INPUT BY SETTING MEAS_OUT HIGH IMPEDANT 23
16. APPLICATION NOTES 24
16.1. SYSTEM DEFINITION EXAMPLE WITH 2-WIRE HALL SWITCHES 24
16.2. RESISTIVE SWITCHES 25
16.3. 2-WIRE ANALOG SENSORS 25
16.4. GROUND SHIFT 26
17. STANDARD INFORMATION REGARDING MANUFACTURABILITY OF MELEXIS PRODUCTS WITH DIFFERENT SOLDERING PROCESSES 27
18. ESD PRECAUTIONS 27
19. PACKAGE INFORMATION 28
20. DISCLAIMER 29

3. Absolute Maximum Ratings

Supply Voltage, VSUP (overvoltage)	40V
Supply Voltage, VSUP (operating)	25V
Supply Current, I_{DD}	6 mA
Output Current, SENSE	90 mA
Storage Temperature Range, T_S	-40°C .. +150°C
ESD Sensitivity (AEC Q100 002)	1.5 kV

Exceeding the absolute maximum ratings may cause permanent damage. Exposure to absolute-maximum-rated conditions for extended periods may affect device reliability.

4. MLX16305 Electrical Specifications

DC Operating Parameters Tj = -40°C to 90°C, VSUP = 8V to 25V (unless otherwise specified)

Symbol	Parameter	Conditions	Min	Nom	Max	Unit
Vsup	Supply		8		25	V
Isense	Sense output current	Vsup-Vref ≥ 2.5V, Vref < 7V	1		30	mA
		Vsup-Vref ≥ 3.5V, Vref < 7V	1		40	mA
		Vsup-Vref ≥ 8V, Vref < 8.25V	1		45	mA
Vref	Analog input		3		8.25	V
Rref			1			kOhm
IDD	Current consumption	VCC=25V, no channel selected			6	mA
IVref	Current consumption on Vref	Vref = 5V No current limitation condition			0.5	mA
Digital inputs						
V_{IL}	Input low voltage		-0.3		0.75	V
V_{IH}	Input high voltage		1.9		5	V
	Input pull-down		30	100	220	kΩ
MEASOUT output						
VMEAS	Output voltage range		0.05		Vref+0.5	V
IMEAS	Current capability		300			uA
VMEAS_DIS	Output voltage in VM with voltage regulator disabled	ENABLE = 0, VI_CTRL=0 (VM)		0.05	0.2	V
Rsense_pd	SENSE pin pull-down		30	100	220	kΩ
Meas_Verr1	Error in Voltage Mode	3V< Vsense < 8.25V			5%	
Meas_Verr2	Error in Voltage Mode	1V< Vsense < 3V			20%	
Vmeas_Voffset	Offset error in Voltage Mode	1V< Vsense < 8.25V			25	mV
%Meas_Ierr1	Error in Current Mode	5mA< Isense <40mA	-5%		5%	
IMeas_err2	Error in Current Mode	0mA< Isense <5mA	-25		25	uA
Ioffset	Forced Offset current	ENABLE = 0, VI_CTRL=1 (CM)	0.055		1	mA

Symbol	Parameter	Conditions	Min	Nom	Max	Unit
Voltage regulation on SENSE pins						
Vsense_err1	$V_{SENSE} - V_{REF}$	3V ≤ Vref ≤5V	-100		100	mV
Vsense_err2	$V_{SENSE} - V_{REF}$	5V ≤ Vref ≤8.25V	-150		150	mV
C_{SENSE}	Maximum capacitive load on SENSE pins				150	nF
Miscellaneous						
T_{rise}	SENSE rising time	Vref=5V from ENABLE=1 to V(SENSE) = [4.9, 5.1]V	0	150	250	us
$T_{shutdown}$	Thermal Shutdown (junction)		120	150		°C
VMEAS_OTH	MEASOUT Voltage for Overtemperature condition		1.9			V
VMEAS_OTL	MEASOUT Voltage without Overtemperature condition				0.9	V
$Isense_{LIM}$	Current limitation level on SENSE pins.	RREF=1kOhm, VREF=5V	40		80	mA

5. Pin assignment

PIN No.	SHORT NAME	DESCRIPTION	FUNCTION
1	SENSE3	5V / 40mA	Driver Output
2	SENSE2	5V / 40mA	Driver Output
3	SENSE1	5V / 40mA	Driver Output
4	VSUP	Range: 8V .. 25V	Supply
5	ENABLE	TTL Levels	Digital Input
6	MUX_SENSE0	TTL Levels	Digital Input
7	MUX_SENSE1	TTL Levels	Digital Input
8	MUX_SENSE2	TTL Levels	Digital Input
9	VREF	External Voltage Reference	Analog Input
10	VI_CTRL	TTL Levels	Digital Input
11	MEAS_OUT		Analog Output
12	RREF		Analog Output
13	VSS	Ground (analog + digital)	Ground
14	SENSE6	5V / 40mA	Driver Output
15	SENSE5	5V / 40mA	Driver Output
16	SENSE4	5V / 40mA	Driver Output

6. Block Diagram

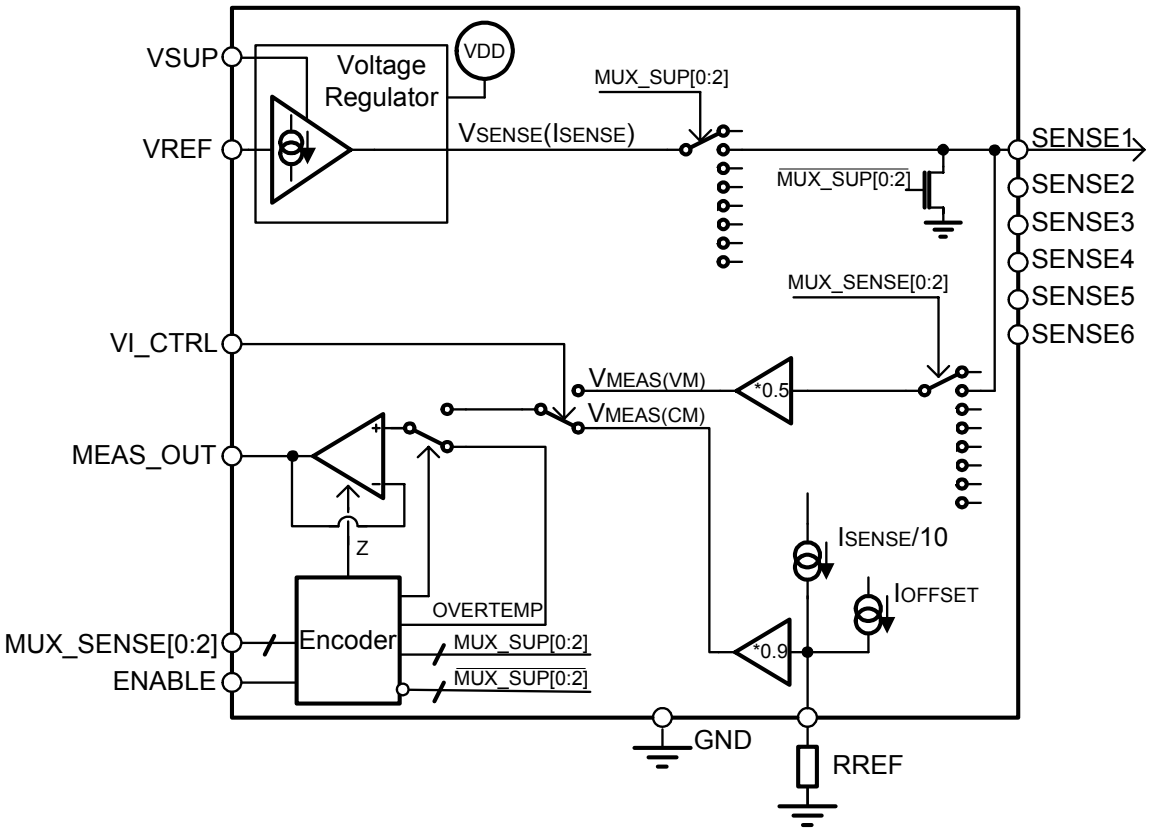

7. General Description

The MLX16305 simplifies the monitoring and diagnostics of up to 6 mechanical switches through voltage and current sensing. The 6 SENSE inputs are multiplexed onto a single output pin (MEAS_OUT). The SENSE pins can be supplied by a Voltage source that forces the Vref voltage with a current limit ($Isense_{LIM}$).
The MLX16305 is controlled by the microcontroller through a 5 wire digital interface. This allows the microcontroller to either apply a voltage to maximum 1 SENSE pin, or leave them high impedant. At the same time the microcontroller can evaluate the current drawn or the voltage measured on either that same pin or any other SENSE pin. This way the state of a mechanical switch can be read or the switches can be diagnosed to detect open wires, shorts between SENSE pins, to Ground or to Supply.

With the VI_CTRL input the MLX16305 can be set in either Current Mode (CM) or in Voltage mode (VM)

- In **current measurement mode (CM)**, the current drawn by the selected SENSE pin (Isense) from the voltage source is copied onto an external resistor Rref to convert it to a proportional voltage presented on the MEAS_OUT pin.
- In **voltage measurement mode (VM)** the voltage on the selected SENSE pin is copied directly onto the MEAS_OUT pin divided by two, such as to come within the voltage rail set by Vref.

The combination of voltage and current measurements allow diagnosing multi-level currents to detect the state of the switch, whilst allowing to check shorts to GND and to Supply failure modes.

8. PIN description

8.1. Supply Range (VSUP)

For correct operation of the Voltage source, a minimum voltage drop is required between the supply (VSUP) and the reference voltage (Vref). Therefore the main supply VSUP of the IC device is specified as:

- V_{SUPmin} = V_{REF} + 2.5V for Isense ≤ 30mA
  V_{REF} + 3.5V for Isense ≤ 40mA
  V_{REF} + 8V for Isense ≤ 45mA
- V_{SUPmax} = 25V

The supply current IDD is specified for disabled SENSE pins (MUX_SENSE=000b: the voltage regulator is disabled), and represents the current drawn from VSUP.

In case a SENSE pin is pulling current, the total current consumption is the addition of:

- the internal current through the device (same as IDD)
- the current drawn by the SENSE pin (I_{SENSE}) from the voltage regulator
- the 10:1 mirror current of I_{SENSE} on the RREF pin

8.2. Input Voltage Reference (VREF)

The VREF pin is used as an external reference for voltage regulation on the SENSE pins. Vref also defines the clamping level of the MEAS_OUT pin. This reference voltage is generated externally and can vary independent of VSUP and digital input levels. In a typical example with 5V microcontrollers and 5V Hall switches Vref is directly taken from the external 5V regulator.

Remark that even though the Hall switches are supplied at VREF, the load on VREF is limited to IVref. The regulator that supplies the Halls is drawing its current from VSUP.

8.3. Voltage Regulation (SENSE)

The voltage on the SENSE pins is forced to the Vref level.
Depending on the applied Vref, the maximum deviation is specified as:

Vsense = Vref +/- Vsense_errx (see electrical specification)

- The Voltage regulation specification is only valid for Isense and Csense values within specification.
- Maximum total capacitor load includes the wiring parasitic capacitance and Hall Switch supply capacitor if applicable.
- The Output Settling time on pins SENSE1 … SENSE6 for the selected channel is Trise after ENABLE pin is set high.

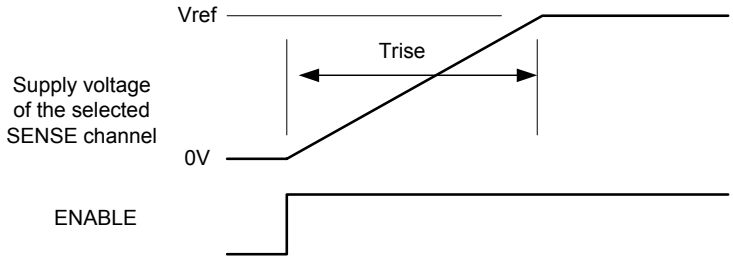

8.4. Output voltage to the microcontroller ADC (MEAS_OUT)

The microcontroller can evaluate/diagnose the state of the interlock switch based on the voltage that its ADC will measure on the MEAS_OUT pin.

- The VMEASOUT output voltage is not higher than Vref + 0.5V to avoid damaging of the microcontroller ADC input.
- The MEASOUT pin is able to deliver minimum IMEAS.
- MEAS_OUT can be made high impedant to allow multiplexing of 2 or more MLX16305 devices in parallel when more than 6 channels are required.

8.5. Digital Inputs

DEFINITIONS:

- Digital input pins ENABLE, VI_CTRL and MUX_SENSE[0:2] have TTL characteristic. Additionally these pins have internal pull downs for a defined reset behavior of the complete system.
- Logic levels : LOW : $V \leq V_{IL}$ and HIGH : $V \geq V_{IH}$

- Bit representation.
  To select SENSE channel 1, set
  - MUX_SENSE0: 0
  - MUX_SENSE1: 0
  - MUX_SENSE2: 1

  In his document this is represented as MUX_SENSE[0:2]=001b

FUNCTIONALITY:

- MUX_SENSE[0:2] has a double function
  - It controls the multiplexer that selects the channel that is to be sensed/measured
  - And these inputs are latched into MuxSenseLatched [0:2] when ENABLE goes high.
- ENABLE has a double function
  - When Enable =0 the MuxSenseLatched [0:2] signals are identical to the MUX_SENSE inputs. When Enable=1, the MUX_SENSE signals are latched into MuxSenseLatched [0:2]. This way a different channel can be sensed, from the one supplied (MUX_SENSE ≠ MuxSenseLatched).
  - Enable resets MUX_SUP to 000b when ENABLE is logic low. This disconnects all channels from the voltage regulator (Isense=0mA) and activates a weak pull down on all pins.
- VI_CTRL selects Current Mode or Voltage Mode (see below)

8.6. ENCODER: Internal Digital Signals

- MuxSenseLatched[0:2] signals are defined by the MUX_SENSE and ENABLE inputs. It is used for 3 purposes:
  - to go to OVERTEMP measurement mode
  - to set MEAS_OUT high impedant
  - to select the channel that is to be supplied with Vref.
    MuxSenseLatched = MUX_SUP if ENABLE = 1

The standard relation between MUX_SENSE, ENABLE and MuxSenseLatched can be viewed as a latch that is controlled by ENABLE:

- ENABLE = 0
  - ⇨ then the latch is transparent: MuxSenseLatched == MUX_SENSE
- ENABLE = 1
  - ⇨ then the latch is closed: MUX_SENSE can be changed without influencing MuxSenseLatched.

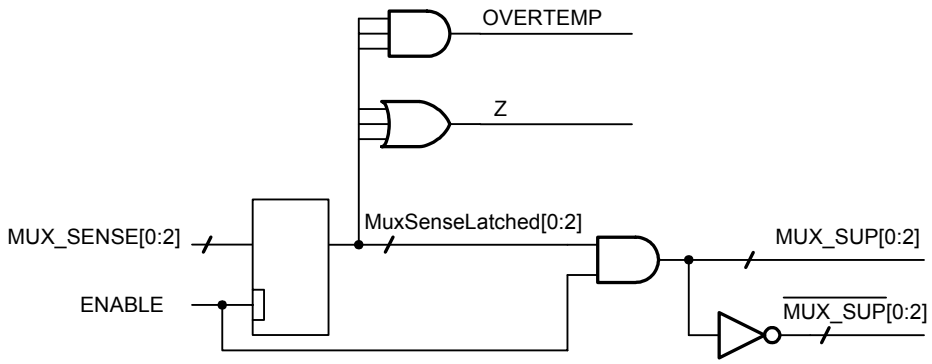

MUX_SUP == MuxSenseLatched AND ENABLE

The MUX_SUP[0:2] signals control the multiplexer that selects the channel on which the voltage regulator will force Vref.

1. Apply on MUX_SENSE the value of the channel that should be supplied while ENABLE is low.
2. Then switch ENABLE high to latch this state into MuxSenseLatched.
3. As long as ENABLE stays high the selected SENSE pin will be supplied with the VREF voltage.
4. In the mean time MUX_SENSE may change. This allows diagnostics for shorts between SENSE pins. One channel can be supplied with Vref and another can be sensed. (MUX_SUP ≠ MUX_SENSE)
5. As soon as ENABLE goes low again, MUX_SUP is reset to 000b, hence disabling every channel. The weak pull down on every SENSE pin will then pull VSENSE down.

OVERTEMP (Dominant setting):

In order to set OVERTEMP = 1 MuxSenseLatch[0:2] has to be set to 111b.

- When ENABLE = 0, the Overtemp condition can be read out on the MEAS_OUT pin by setting MUX_SENSE = 111b.
- When ENABLE turns = 1 MuxSenseLatched remains = 111b. Changes on MUX_SENSE[0:2] are neglected (= don't care).

Z or HIGH IMPEDANT (Dominant setting):

In order to set Z = 1 MuxSenseLatch [0:2] has to be set to 000b.

- When ENABLE = 0, MUX_SENSE has to be set to 000b.
- When ENABLE turns = 1 MuxSenseLatched remains = 000b. Changes on MUX_SENSE[0:2] are neglected (= don't care).

Mind that both OVERTEMP=1 or Z=1, are dominant settings on MEAS_OUT. This implies that any changes on VI_CTRL and MUX_SENSE[0:2] are not visible.

MIND.
Do not confuse the latch with a flip-flop which is only sensitive during rising edge of the Enable. The latch is transparent for input changes whilst ENABLE is low, not only during the rising edge.

Timing diagram

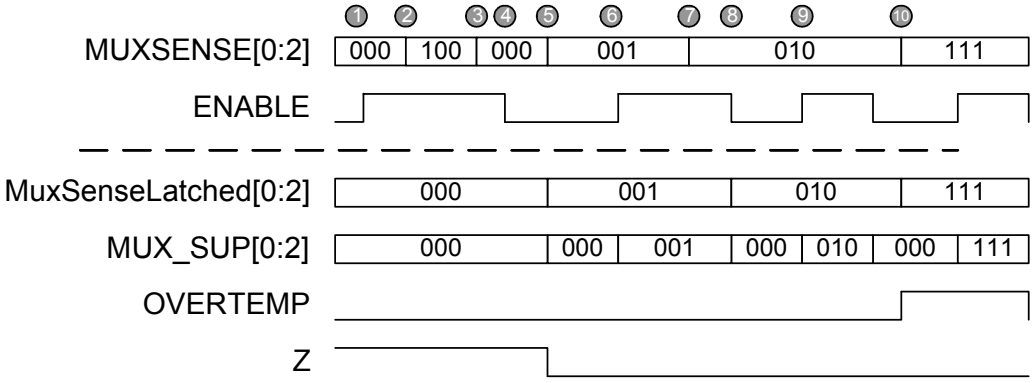

The above timing diagram shows how the inputs are converted internally:

❶ In case of multiplexing 2 or more devices, the system should start up with MUXSENSE[0:2] and ENABLE = 0 for all devices in order to avoid conflicts on the MEASOUT output.
❷ Changes on MUXSENSE are not seen by the device as long as ENABLE is kept high.
❸ In order to switch from one device to another device all MUXSENSE inputs are reset to 000b.
❹ In order to start switch MUXSENSE at ❺, all other devices should have set ENABLE high.
❺
  a. In Current Mode Channel 0 is selected, VMEASOUT = VMEAS(offset)as long as ENABLE is low.
  b. In Voltage mode, no channel is selected, so VMEAS remains 0V.
❻
  a. In CM the voltage regulator supplies current to channel 0 (Isense0). Isense0 is copied onto RREF, and can be calculated from VMEASOUT.
  b. In VM the voltage regulator supplies Vref to channel 0 (Vsense0). Vsense0 is copied on VMEASOUT.
❼ ENABLE remains high
  a. In CM changes on MUXSENSE are neglected (don't care)
  b. In VM, the voltage is measured on channel 1, which has its weak pull down active. If Vsense1 > 0V then a short to Channel 1 is found.
❽ ENABLE goes low, disabling all channels while channel 1 is selected. See ❺
❾ ENABLE goes high and low again while MUXSENSE remains unchanged.
  a. In CM Isense1 can be measured while ENABLE is high.
  b. In VM channel 1 is supplied with Vref and the resulting Vsense1 is copied to VMEASOUT
❿ MUXSENSE=111b displays the OVERTEMP condition on the MEASOUT pin.

MUX_Sense	ENABLE	MuxSenseLatched	MUX_Sup	Z/Overtemp	VI_CTRL	MEAS_OUT	DESCRIPTION	FAULT DETECTED on MEAS_OUT
001	0	001	000	0/0	0	V(SENSE1)/2	MUX_Sup=000: SENSE pins are not supplied, and the weak pull down is active. MUX_Sense selects the SENSE pins to be monitored in voltage mode VMEAS_OUT = Vsense/2.	Normal <VMEAS_DIS; Else VMEAS>VMEAS_DIS, then the weak pull down is overruled. A short to Vbat or to another High Voltage node is detected.
010	0	010	000	0/0	0	V(SENSE2)/2		
011	0	011	000	0/0	0	V(SENSE3)/2		
100	0	100	000	0/0	0	V(SENSE4)/2		
101	0	101	000	0/0	0	V(SENSE5)/2		
110	0	110	000	0/0	0	V(SENSE6)/2		
001	0	001	000	0/0	1	0V	MUX_Sup=000: SENSE pins are not supplied, and the weak pull down is active. MUX_Sense selects the SENSE pins to be monitored in current mode: Since there is no current supplied, no current can be copied on RREF.	State used in application for offset measurement VMEAS_OUT(offset) = 0.9*Ioffset*Rref
010	0	010	000	0/0	1	0V		
011	0	011	000	0/0	1	0V		
100	0	100	000	0/0	1	0V		
101	0	101	000	0/0	1	0V		
110	0	110	000	0/0	1	0V		
XXX	1	000		1/0	X	Z	MUX_Sense=000 is latched to set Z=1	MEAS_OUT is high impedant.
000	0	000	000	1/0	X	Z		
XXX	1	111		0/1	X	OVTEMP	MUX_Sense=111 has been latched to set Overtemp=1	OVERTEMP => VMEASOUT>VMEASOUT_OTH; else: VMEASOUT<VMEASOUT_OTL;
111	0	111		0/1	X	OVTEMP		
000	1	other than 000/111		0/0	0	floating node	The output shows the state of an internal floating node. This value is undefined because the IC tries to measure voltage on a non-existing channel	
111	1	other than 000/111		0/0	0	floating node		
001	1	001		0/0	0	V(SENSE1)/2	MEAS_OUT = Voltage on SENSE1 Pin divided by 2	Normal = VREF/2 ; Else VMEASOUT> Normal: Short to Vbat Else VMEASOUT< Normal: Short to GND on the sensed channel
010	1	010		0/0	0	V(SENSE2)/2	MEAS_OUT = Voltage on SENSE2 Pin divided by 2	
011	1	011		0/0	0	V(SENSE3)/2	MEAS_OUT = Voltage on SENSE3 Pin divided by 2	
100	1	100		0/0	0	V(SENSE4)/2	MEAS_OUT = Voltage on SENSE4 Pin divided by 2	
101	1	101		0/0	0	V(SENSE5)/2	MEAS_OUT = Voltage on SENSE5 Pin divided by 2	
110	1	110		0/0	0	V(SENSE6)/2	MEAS_OUT = Voltage on SENSE6 Pin divided by 2	
001	1	other than 001/000/111		0/0	0	V(SENSEx)/2	MEAS_OUT = Voltage on SENSE1 Pin divided by 2	Normal <VMEAS_DIS; Else VMEASOUT =VREF/2 reflecting a short between sensed channel and supplied channel
010	1	other than 010/000/111		0/0	0	V(SENSEx)/2	MEAS_OUT = Voltage on SENSE2 Pin divided by 2	
011	1	other than 011/000/111		0/0	0	V(SENSEx)/2	MEAS_OUT = Voltage on SENSE3 Pin divided by 2	
100	1	other than 100/000/111		0/0	0	V(SENSEx)/2	MEAS_OUT = Voltage on SENSE4 Pin divided by 2	
101	1	other than 101/000/111		0/0	0	V(SENSEx)/2	MEAS_OUT = Voltage on SENSE5 Pin divided by 2	
110	1	other than 110/000/111		0/0	0	V(SENSEx)/2	MEAS_OUT = Voltage on SENSE6 Pin divided by 2	
XXX	1	001		0/0	1	ISENSE1*Rref/10	MEAS_OUT = Current on SENSE1 Pin	Switch state: current levels OPEN/CLOSE DIAGNOSTICS: VMEASOUT = 0 => Open wire VMEASOUT > VREF*0.9: => Short to GND
XXX	1	010		0/0	1	ISENSE2*Rref/10	MEAS_OUT = Current on SENSE2 Pin	
XXX	1	011		0/0	1	ISENSE3*Rref/10	MEAS_OUT = Current on SENSE3 Pin	
XXX	1	100		0/0	1	ISENSE4*Rref/10	MEAS_OUT = Current on SENSE4 Pin	
XXX	1	101		0/0	1	ISENSE5*Rref/10	MEAS_OUT = Current on SENSE5 Pin	
XXX	1	110		0/0	1	ISENSE6*Rref/10	MEAS_OUT = Current on SENSE6 Pin	

(*)in CM VMEASOUT in the above table is the calculated value after subtracting the contribution of the offset = VMEASOUT - VMEASOUT (offset)

9. Voltage Mode (VM)

To go into Voltage Mode (VM) VI_CTRL is set low. In this mode the resulting voltage on the SENSE pin (V_{SENSE}) is copied onto the MEAS_OUT pin. For normal operating conditions (Vref>Vsense) it can be calculated back as:

- for 3V < V_{SENSE} < 8.25V
  - $V_{MEASOUT\ min} = [V_{SENSE} * (1 - Meas_Verr1)] / 2 - V_{MEASOUT_VOFFSET}$
  - $V_{MEASOUT\ max} = [V_{SENSE} * (1 + Meas_Verr1)] / 2 + V_{MEASOUT_VOFFSET}$
- for V_{SENSE} < 3V the accuracy is reduced to Meas_Verr2.
  This condition can occur
  - with a short to GND
  - or for detecting shorts to an external voltage below 3V. This case can be diagnosed by selecting a pin without supplying it with the regulated voltage. Any voltage that is measured has to be due to an external source that is connected to that pin.
- for V_{SENSE} > V_{REF} (short to supply)
  - $V_{MEASOUT\ max} < V_{REF} + 0.5V$

  This condition can be diagnosed with the SENSE pin in high impedant state (weak pull down is active), as well as in the state with the channel is supplied with the regulated voltage.

Remark
- When a SENSE pin is measured in Voltage Mode (VM) without being supplied by the voltage regulator, then an internal pull down keeps the voltage on that SENSE pin low, unless it is overruled by a short to supply.
  - If no short to VBAT is forced then:

$$V_{MEASOUT} < V_{MEAS_DIS}$$

10. Current mode (CM)

The high accuracy of the MLX16305 can be used

- to define clear boundaries of voltages. These boundaries will allow straightforward classification of the state of current modulated switches.
- to measure industry standard current modulated sensors (for instance with the MLX90308, MLX90314)

10.1. Current to Voltage conversion principle

The current ISENSE, supplied by the voltage regulator, is copied on the RREF pin with a 10:1 ratio. This current is converted into voltage information via the external RREF resistor. An additional offset current is forced on Rref. This results in a voltage over the RREF resistor of

- $V_{RREF} = (I_{SENSE} / 10 + I_{OFFSET}) * R_{REF}$

This V_{RREF} is then copied on the MEASOUT pin with a factor of 0.9, i.e.:

- $V_{MEASOUT} = V_{RREF} * 0.9$

10.2. The actual measurement

In current mode 2 type of measurements can be distinguished:

1) Offset measurement

While the voltage regulator is disabled, the contribution of the internal offset current can be measured.

- $V_{MEASOUT}$ (Vreg is disabled) = $V_{MEASOUT_IOFFSET}$

2) Actual Isense measurement

When a channel is selected and ENABLE is set high, the Isense of the selected channel will be copied on top of the offset current onto RREF.

- $V_{MEASOUT}$ _(Vreg Enabled) = $V_{MEASOUT_ENABLED}$

From this we can derive

- $V_{CALC_ISENSE} = V_{MEASOUT_ENABLED} - V_{MEASOUT_IOFFSET}$

Remarks:

- The current is always copied directly from the voltage regulator. Therefore as soon as ENABLE has gone high to fix which channel is supplied (MUX_SUP is fixed), then MUX_SENSE becomes don't care!

10.3. How to do an offset current measurement

In Current Mode (VI_CTRL is set high HIGH),

Set ENABLE = LOW.

This will set MUX_SUP[0:2] = 000

which will disable the Voltage regulator, such that no Isense current is mirrored into RREF.

Remarks:

- Possible Shorts on the SENSE channels have no influence on the offset measurement.
- Since ENABLE is low, the latch is transparent. Therefore make sure MUX_SENSE ≠ 000b or 111b in order to avoid the Z or the Overtemp condition (MuxSenseLatched ≠ 000b or 111b)
- Offset may drift over longer periods of time and important temperature variations. Before every measurement sequence the Offset measurement should be repeated.
- In case multiple Rref values are used for the different sense inputs – for instance to set different sensitivity levels), then the offset voltage ($V_{MEASOUT_IOFFSET}$) has to be measured for each Rref individually. Any change to Rref implies a new offset measurement.
- In case multiple MLX16305 devices are used in parallel, the offset should be measured and stored for every device.
- An OPEN WIRE condition has Isense = 0mA, and as a result only Ioffset will contribute to the voltage over Rref. Therefore

  Vmeasout_enabled [Open Wire] = $V_{MEASOUT_IOFFSET}$

10.4. Measurement Errors

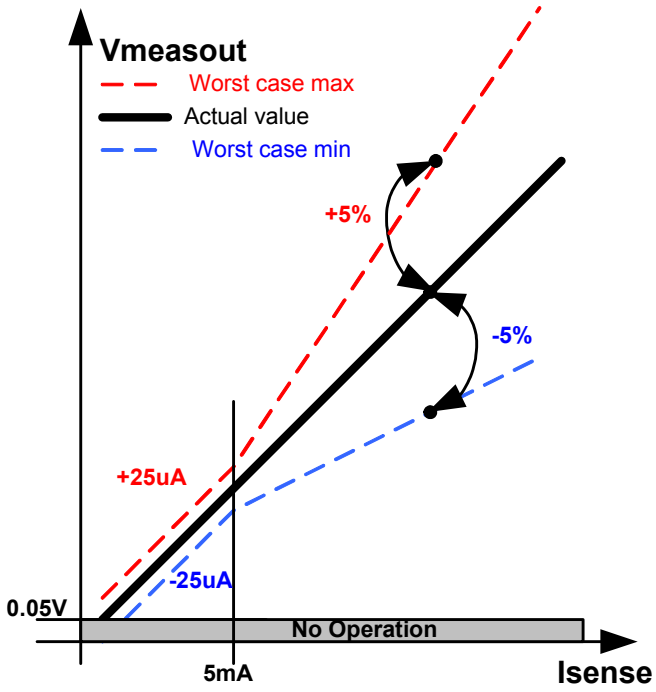

In the above graph the errors values are shown in Current Mode.
Down to 5mA %Meas_Ierr1 and below 5mA IMeas_Ierr2.

For instance for Isense > 5mA, then $V_{MEASOUT_ISENSE}$ ~ Isense +/-5%

Remarks:

- The error over the total chain in CM (%Meas_Ierrx) does not include error due to the external RREF resistor.
- In the full system calculation additional errors have to be added for the tolerances on the sensor current, the ADC supply noise, etc.

11. How to predict the system operating zone

11.1. VMEASout limits

The worst case output voltages, including measurement errors, on the MEAS_OUT pin can be predicted with following formulas:

- For 5mA < I_{SENSE} ≤ 40mA
  - $V_{MEASOUTmin}$ = [I_{SENSE} /10 * (1 - %Meas_Ierr1) + Ioffsetmin] * R_{REF} * 0.9
  - $V_{MEASOUT\ max}$ = [I_{SENSE} /10 * (1 + %Meas_Ierr1) + Ioffsetmax] * R_{REF} * 0.9

- For I_{SENSE} ≤ 5mA
  - $V_{MEASOUTmin}$ = [I_{SENSE}/ 10 - IMeas_Ierr2 + Ioffsetmin] * R_{REF} * 0.9
  - $V_{MEASOUTmax}$ = [I_{SENSE}/ 10 + IMeas_Ierr2 + Ioffsetmax] * R_{REF} * 0.9

11.2. Isense limits

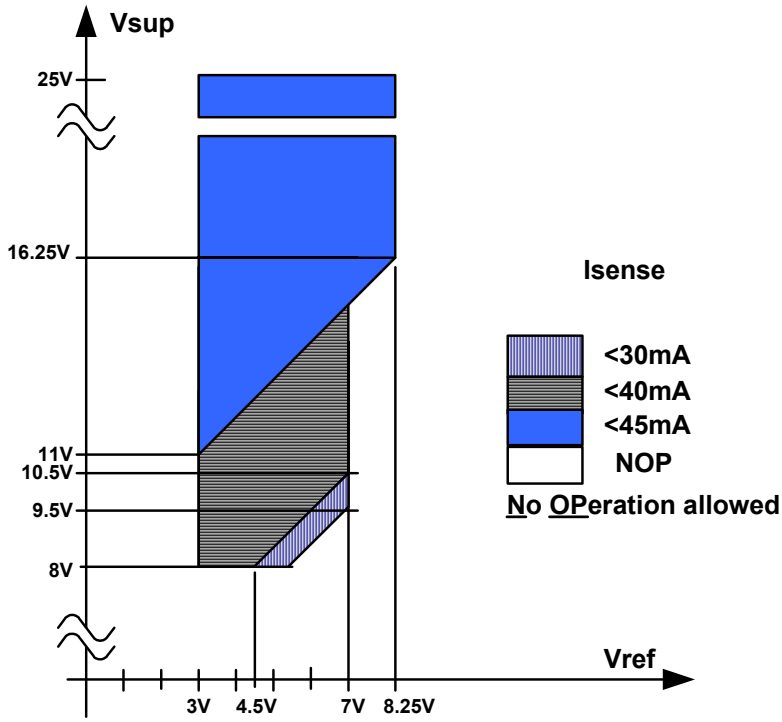

The operating range, and the corresponding maximum Isense, is defined by the Vsup-Vref range as shown in the graph.

Other limiting specifications are:

1) Absolute maximum allowable Isense < 90mA:
Under no condition the Isense current should be larger than 90mA, in order to avoid permanent damage to the IC.

2) Minimum Current limitation threshold: see Overcurrent limitation (next paragraph)

3) Overtemperature shutdown: see Overtemperature Detection

12. Overcurrent Limitation

The MLX16305 has a built-in overcurrent limitation as protection against destruction and overheating. It also allows detecting short circuits to Ground on any of the SENSE channels.

The voltage regulator will enter current limitation when the voltage over the external Rref resistance (VRREF) is between VREF and VREF + 3V:

VREF < VRREF(limit activated) < VREF + 3V

The current limitation is realized by reducing the forced output voltage on the SENSE pin (VSENSE), until VRREF drops below the limitation threshold.

The graph shows the trends of Isense (~VRREF) and Vsense for an example where:
Vref = 5V and Rref=1kΩ.

As the Rsense 'load' drops from normal operating range down to a short circuit condition Isense is theoretically clamped between 40 and 80mA, depending on Ioffset:

IsenselimMin = (VRef/Rref – (Ioffsetmax=1mA))*10

IsenselimMax = (Vref+3)/Rref *10

Remark

- Under any condition, including during current limitation it is guaranteed that
  Vmeasout < Vref +0.5V

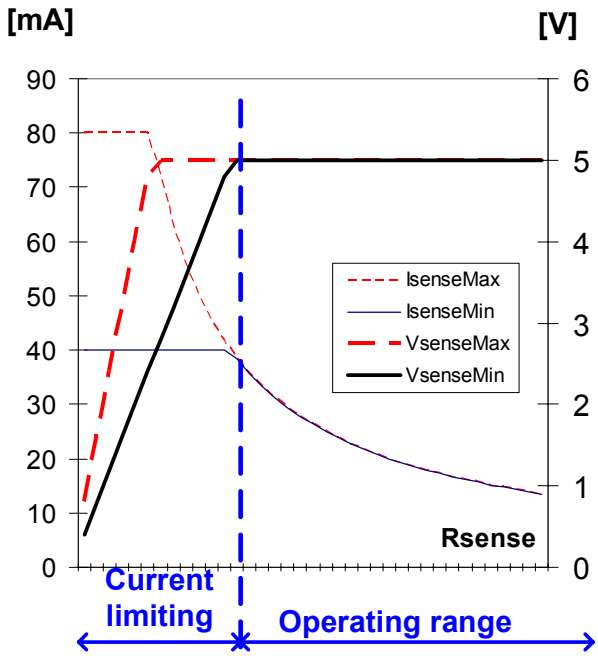

The current limiting should also be taken into account to set the minimum allowable operating current.

The graph on the right shows the minimum Isense limits for Rref = 1kOhm for different values of minimum Vsup:

- Zone ① is due to the current limiting
- Zone ② is due to Isense Max specification
  - ②a: 30mA
  - ②b: 40mA
  - ②c: 45mA

Remark that Zone ① will shift to the right when increasing Rref, and to the left with reducing Rref

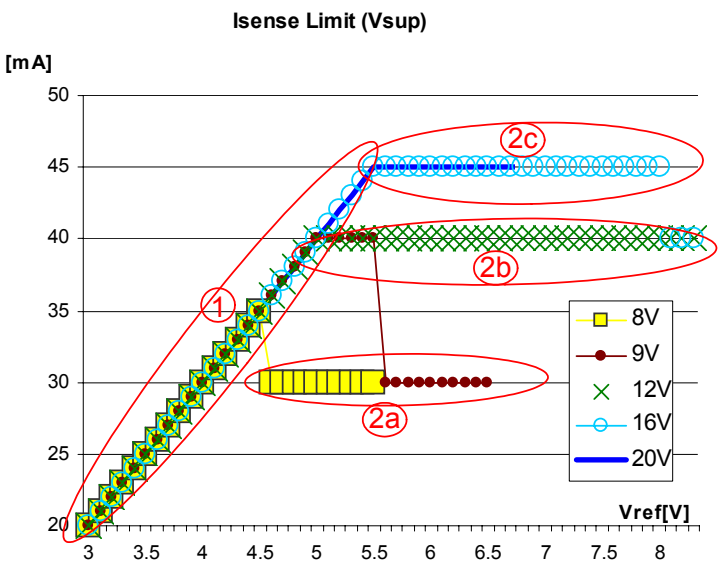

Remark 1:
When reducing Rref, the absolute maximum Isense current be limited to 90mA.
For instance

- For Vref = 3V => Isenselim [20, 60]mA
  So even if Vsup-Vref allows higher currents, the operating range is limited by the current limitation. An alternative is to reduce Rref, to increase the current limit.
  For instance RREF = 500Ω.
  => Isenselim [40, 120]mA
  Remark that the absolute maximum Isense current should.

- Vref = 8.25V => Isenselim [72.5, 112.5]mA
  Remark that the absolute maximum Isense current is limited to 90mA.
  An alternative is to increase RREF, for instance to 1500Ω.
  => Isenselim [45, 75]mA

Remark 2:
Current limitation can be monitored via the voltage on MEAS_OUT:

- In Current Mode: $V_{MEASOUT} = [\ 0.9 * V_{REF}\ ,\ V_{REF} + 0.5V\ ]$
- In Voltage Mode: $V_{MEASOUT} = V_{SENSE} / 2 < V_{REF} / 2$

13. Overtemperature Detection

The MLX16305 has an internal overtemperature detection to protect against destruction and overheating. By applying the correct sequence on the digital input pins the OVERTEMP state is readable via the MEAS_OUT pin coded as:

- VMEAS ≤ VMEAS_OTL = normal operation
- VMEAS ≥ VMEAS_OTH = Overtemperature condition detected.

When an overtemperature condition is detected the supply regulator will shut down until the overtemp condition has gone. Then diagnostics should show the root cause of the overtemperature condition.

13.1. Overtemperature considerations

Depending on the layout of the PCB, the **thermal resistance** of a narrow body SO16 package can be as low as 82°C/W (ideal reference value for a 4 layer pcb).
For the below calculations we use 100°C/W.

The increase in junction temperature (Tj) due to energy dissipation in the linear voltage regulator can be calculated as follows:

- Assuming worst case operating conditions VSUP=18V and Tamb = 85°C.
- And VREF=5V and RREF = 1kOhm,

EXAMPLE 1: 40mA continuous
Assuming the maximum supply current is drawn from a Sense pin, and the voltage is regulated to Vref (no short condition)
⇨ Dissipation due the this: 40mA * (18-5)V = 0.52W
Additionally the current sources supply RREF with Isense/10 + Ioffset (<1mA)
⇨ Maximum Dissipation due the this: (40mA/10 + 1mA) * (18-5)V = 0.07W

Therefore the maximum power dissipation on the MLX16305 is 0.59W.
⇨ The maximum junction temperature is then 85°C+100°C/W*0.59W = 144°C.

This is outside the operating range. Furthermore the MLX16305 may shut down due to overtemperature since Tj > $T_{shutdown}$.

EXAMPLE 2: Duty Cycling
In practice the controller will scan the different SENSE outputs one by one. As described in above (diagnostics flow) the regulator can be expected to be active for example for 0.5ms per pin, including 250us settling time.

At Tamb = 85°C, Tj<90°C can be guaranteed as follows:
The heating of 59°C in EXAMPLE1 can be reduced by waiting 5.5ms before selecting the next pin
The flow then becomes:
0.5ms evaluating pin1 => 5.5ms off => 0.5ms evaluating pin2 => 5.5ms off => …

Or also: evaluate all 6 pins consecutively (6*0.5ms) and switch off for > 33ms

Example3: Short to GND
Short to ground implies that Vsense = 0V.
When the regulated supply is applied, then the SENSE voltage will be kept at 0V by the short, and the internal current limitation will limit the current to for instance 50mA. Therefore the power dissipation from the SENSE pin is
⇨ Worst case Dissipation due the short: 50mA * 18V = 0.9W

The controller will immediately diagnose the failure, and switch off the supply.
Therefore no dissipation will be due to this. Worst case the MLX16305 will go in overtemperature and shut down itself.

14. DIAGNOSTICS

14.1. Shorts

Long wires to the remote switches are prone to shorts to Ground, to supply or between the wires. The MLX16305 allows continuous failure mode diagnostics on each SENSE pin individually. The circuit works also if one of the SENSE pins is shorted to GND or Vbat (up to +25V); this means that such a short does not influence the measurement on other SENSE pins.

A. Shorts to GND

A short between a SENSE pin and GND can be diagnosed either in Current Mode (CM) or in Voltage mode. The short will cause the voltage source to go in current limitation. As described in the 'Overcurrent limitation' paragraph above, the voltage over Rref (VRREF) will rise to VREF.

- In Current Mode (CM) over current is detected as
  VMEASOUT = 0.9* VREF
- In Voltage Mode over-current is detected as
  VMEASOUT < VREF/2 .
  This value may however also indicate an open or closed switch. Therefore it is recommended to diagnose Shorts to GND in CM.

B. Shorts to Supply (Vsup)

A short between a SENSE pin and a high voltage level, like VIGN or even directly to the battery supply VBAT, can be diagnosed in Voltage Mode:

Method 1: SENSE pin not actively supplied

- Set all SENSE pins high impedant (MUX_SUP[0:2]=000b),
- Then select the respective SENSE pins one by one in Voltage Mode (VM).

=> The weak pull down on each SENSE pin should yield
VMEAS < VMEAS_DIS.
Any higher value indicates a short to a Supply voltage.

Method 2: SENSE pin actively supplied

When there is a short to Supply on a pin that is supplied by the voltage regulator, then the MEAS_OUT voltage will be larger than Vref/2.
VREF/2 < VMEASOUT < VREF

C. Shorts Between wires

A short between the wires connecting the sense pins to the remote switches can be diagnosed in a similar way as shorts to supply:

- Select a SENSE pin. This channel will be supplied with VREF, and act as the supply in the 'Short to Supply' case.
- Then select the other SENSE pins one by one in Voltage Mode (VM).

The weak pull down on the other SENSE pin should yield VMEAS < VMEAS_DIS. Any higher value indicates a short to the selected SENSE pin. To have an unambiguous diagnostics first check 'Shorts to Supply' before checking 'Shorts between Wires'.

14.2. Open Wire

In an Open Wire condition, the regulator can not supply any current (Isense= 0mA). This condition can not be checked in Voltage Mode. In Current Mode Ioffset will generate a signal on RREF. Therefore for the analog measurement chain, an open wire conditions is identical to an offset measurement. Mind that due to ±VMeas_Ierr2 it is possible that after subtraction of the Offset, a negative value may result!

14.3. Diagnostics flow

Example software flow for interlock switch diagnostics:

1) Set ENABLE low
    a. Set MUX_SENSEx (select channel)
    b. Set to Vmode: evaluate short to vbat
2) Set ENABLE high: supply selected channel : wait 250us to allow the output to settle.
    a. In the mean time set Imode.
    b. 250us after ENABLE has been set high -> Evaluate the measured current value
    c. Set to Vmode and evaluate short to ground
    d. Set one by one all other channels to evaluate shorts between the supplied pin and the other channels
3) Return to 1)

For further discussions in this document it assumed that the flow for 1 pin could be completed in 0.5ms including the 250us settling time.

15. Multiplexing the ADC input by setting MEAS_OUT High Impedant

By applying the correct sequence on the digital input pins the MEAS_OUT pin can be set high impedant. This is of interest when using 2 or more MLX16305 in parallel for applications with more than 6 switches to be monitored. The MLX16305 devices are then multiplexed on the same ADC input channel.

The AD input from the microcontroller can be shared by multiple MLX16305 devices in parallel.

With 1 extra digital IO serving as ENABLE for a second device, 6more channels can be controlled.
Procedure:

- First while ENABLE2=0, set MUX_SENSE[0:2] = 000b
- Then latch this value by setting ENABLE2 = 1
- From now on MEASOUT2 is high impedant, and regardless the values of VI_CTRL or MUX_SENSE[0:2], this remains.
- Switching from device one to device two is done by setting MUX_SENSE[0:2] = 000b while ENABLE1=0. Setting ENABLE1=1 makes MEASOUT1 high impedant.
- Now ENABLE2 can be reset to 0 without possible conflict between the 2 MEASOUT outputs.

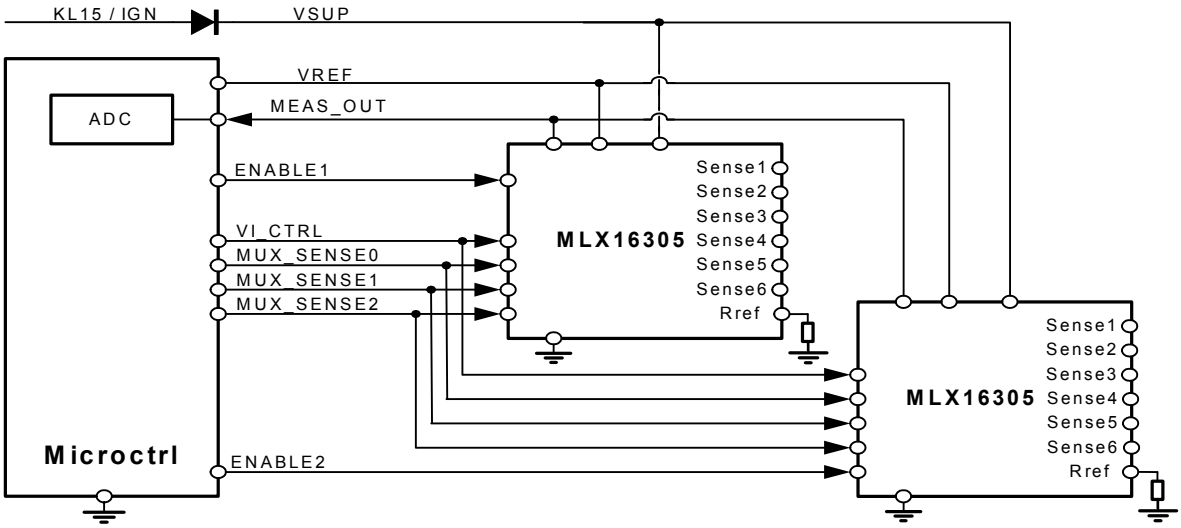

16. Application Notes

16.1. System definition example with 2-wire Hall Switches

The MLX16305 can be used with so called 2-wire Hall effect switches, like the MLX90275. These require typically a minimum operating voltage of 3.5V, and have 2 well defined current states. For instance:

- Ioff: [5; 6.9]mA
- Ion: [12; 17]mA

An example is elaborated for

- Vsup > 8.5V

Mind that on the Safety ECU often higher voltages are available from the squib drivers. These can also be used in stead of the battery voltage to further extend the operating zone.

And furthermore

- Vref = 5V ➔ Vsup-Vref = 3.5V ➔ Isensemax = 40mA
- Rref=1kΩ ➔ Isenselim > 40mA

Since the output voltage in Current Mode is undefined in case of a short to supply, we start in Voltage Mode to diagnose this fault condition first.

VI_CTRL=0

1. **Short to VBAT**
   All SENSE channels are disabled (ENABLE=0) and scanned one by one. If any of the output values rises above VMEAS_DIS, this means the weak pull down is overruled by a short to the supply.
2. **Short between wires.**
   In a similar way if one channel is supplied with Vref, all other channels can be checked on a short to this supplied channel. If any of the output values rises above VMEAS_DIS, this means the weak pull down on the selected channel is overruled by a short to the supplied channel. In a 6 channel application, 15 different wire-to-wire shorts can be checked and diagnosed one by one.

VI_CTRL=1

In Current Mode (CM) 4 more conditions can be diagnosed.

<u>STEP 1:</u>

The first step is to guarantee that each measurement is in the target operating zone under any corner condition. Two tolerances have to be taken into account when calculating the border values for each condition: The offset and the measurement error.

Remark for simplicity of the example we did not calculate tolerances on external components (like Rref) and other noise sources like ADC supply. These have to be added in a real system definition.

As calculation examples the Voltage range corresponding to the OFF state is calculated:
The minimum worst case situation is calculated using

- Ioffmin = 5mA
- Ioffsetmin = 0.055mA
- Error = - 5%
  ➔ VMEASout (OFFmin) = (Isense/10 * 0.95 + Ioffsetmin) * Rref * 0.9 = 0.477 V

The maximum worst case situation is calculated using

- Ioffmax = 6.9mA
- Ioffsetmax = 1mA
- Error = + 5%
  ➔ VMEASout (OFFmax) = (Isense/10 * 1.05 + Ioffsetmax) * Rref * 0.9 = 1.076 V

➔ VMEASout (OFF) = [0.477, 1.552] V

In a similar way the corner values for the ON condition can be calculated to be

➔ Vmeasout (ON) = [1. 076 , 2.507] V

Therefore all Vmeasout values are within [0.05, Vref]

STEP 2:
The actual measurement value is the subtraction of Vmeasout (Isense) - Vmeasout (Ioffset).

In voltage that would correspond to

➔ V (OFF) = VMEASout (OFF) - VMEASout (Ioffset) = [0.430, 0.607] V
➔ V (ON) = VMEASout (ON) - VMEASout (Ioffset) = [1.028, 1.562] V

Therefore the 2 states can be clearly distinguished.

Furthermore depending on the definition of an 'open wire' or a 'short to ground' similar values can be calculated to further distinguish failure mode conditions.

16.2. Resistive Switches

Resistive switches are essentially also acting like current modulated switches. Therefore diagnostics are done in the same manner.

The MLX16305 can supply plenty of cleaning current to allow the use of low cost switches.
Nevertheless, aging may cause drift of the contact resistance values over life. The high accuracy of the MLX16305 allows tracking of such a case and early triggering of eminent failures.

16.3. 2-wire analog sensors

Industrial sensors and sensor interfaces like the MLX90308 have a 4 to 20 mA current range. The MLX16305 can be used to sequentially read them out.
The offset and any non-linearity induced by the 16305 in current mode can be calibrated together with the sensor in production such that a VMEASOUT value is directly related to the sensor output.

16.4. Ground Shift

The MLX16305 allows connecting a remote '2-wire' hall sensor with only 1 wire.
Since the current is directly sensed, the measurement itself is immune to ground shift.
Furthermore [Vref – Vgroundsift] should be guaranteed to be larger than the minimum supply current for the hall sensor. For instance for Vsupmin = 3.5V, and Vref = 5V, a groundshift of 1.5V is acceptable.
Therefore the ground can be taken local from the chassis, reducing the connector pin count on the safety ECU, and reducing the wiring of the cables from the ECU to the remote sensors.

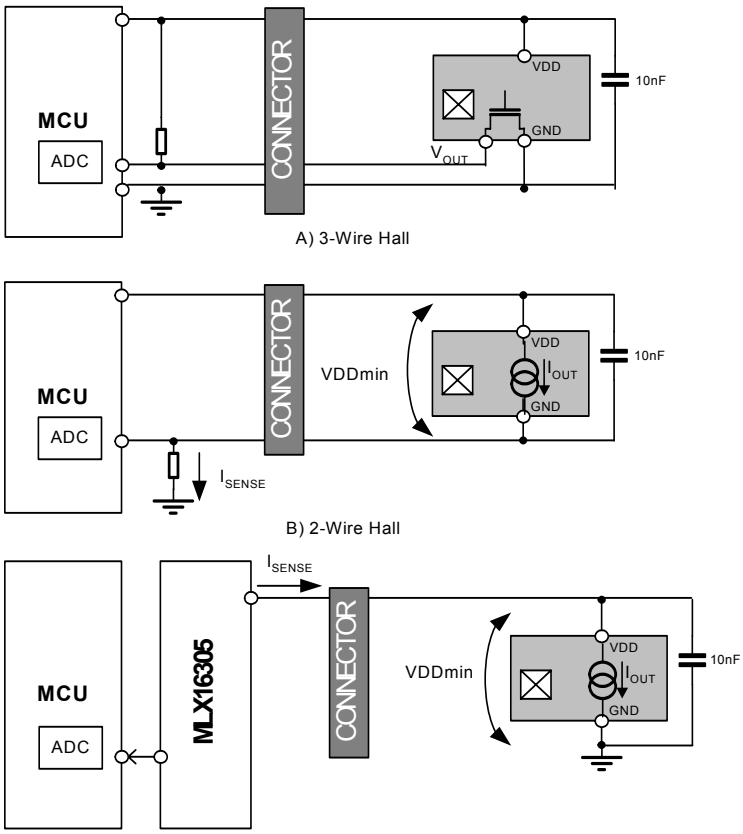

17. Standard information regarding manufacturability of Melexis products with different soldering processes

Our products are classified and qualified regarding soldering technology, solderability and moisture sensitivity level according to following test methods:

Reflow Soldering SMD's (Surface Mount Devices)

- IPC/JEDEC J-STD-020
  Moisture/Reflow Sensitivity Classification for Nonhermetic Solid State Surface Mount Devices
  (classification reflow profiles according to table 5-2)
- EIA/JEDEC JESD22-A113
  Preconditioning of Nonhermetic Surface Mount Devices Prior to Reliability Testing
  (reflow profiles according to table 2)

Wave Soldering SMD's (Surface Mount Devices) and THD's (Through Hole Devices)

- EN60749-20
  Resistance of plastic- encapsulated SMD's to combined effect of moisture and soldering heat
- EIA/JEDEC JESD22-B106 and EN60749-15
  Resistance to soldering temperature for through-hole mounted devices

Solderability SMD's (Surface Mount Devices) and THD's (Through Hole Devices)

- EIA/JEDEC JESD22-B102 and EN60749-21
  Solderability

For all soldering technologies deviating from above mentioned standard conditions (regarding peak temperature, temperature gradient, temperature profile etc) additional classification and qualification tests have to be agreed upon with Melexis.

The application of Wave Soldering for SMD's is allowed only after consulting Melexis regarding assurance of adhesive strength between device and board.

Melexis is contributing to global environmental conservation by promoting **lead free** solutions. For more information on qualifications of **RoHS** compliant products (RoHS = European directive on the Restriction Of the use of certain Hazardous Substances) please visit the quality page on our website: http://www.melexis.com/quality.asp

18. ESD Precautions

Electronic semiconductor products are sensitive to Electro Static Discharge (ESD).
Always observe Electro Static Discharge control procedures whenever handling semiconductor products.

19. Package Information

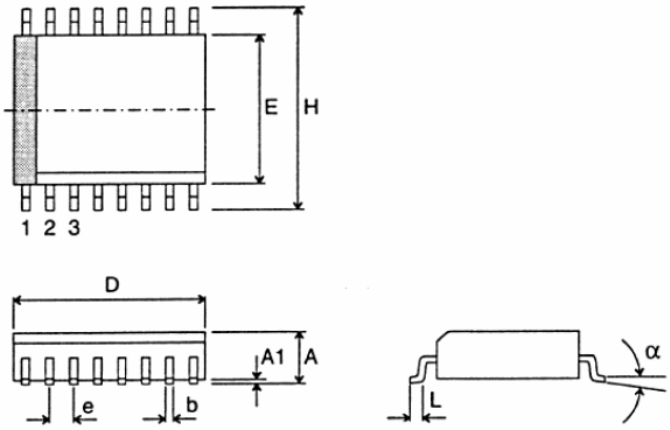

Unit : mm

Package Type		D	E	H	A	A1	e	b	L	α	Package Code
SOIC16 Narrow Body	min	9.80	3.80	5.80	1.35	0.10	1.27	0.33	0.40	0º	DC16
	max	10.00	4.00	6.20	1.75	0.25		0.51	1.27	8º	

20. Disclaimer

Devices sold by Melexis are covered by the warranty and patent indemnification provisions appearing in its Term of Sale. Melexis makes no warranty, express, statutory, implied, or by description regarding the information set forth herein or regarding the freedom of the described devices from patent infringement. Melexis reserves the right to change specifications and prices at any time and without notice. Therefore, prior to designing this product into a system, it is necessary to check with Melexis for current information. This product is intended for use in normal commercial applications. Applications requiring extended temperature range, unusual environmental requirements, or high reliability applications, such as military, medical life-support or life-sustaining equipment are specifically not recommended without additional processing by Melexis for each application.
The information furnished by Melexis is believed to be correct and accurate. However, Melexis shall not be liable to recipient or any third party for any damages, including but not limited to personal injury, property damage, loss of profits, loss of use, interrupt of business or indirect, special incidental or consequential damages, of any kind, in connection with or arising out of the furnishing, performance or use of the technical data herein. No obligation or liability to recipient or any third party shall arise or flow out of Melexis' rendering of technical or other services.
© 2006 Melexis NV. All rights reserved.

For the latest version of this document, go to our website at
www.melexis.com

Or for additional information contact Melexis Direct:

Europe and Japan:
Phone: +32 1367 0495
E-mail: sales_europe@melexis.com

All other locations:
Phone: +1 603 223 2362
E-mail: sales_usa@melexis.com

ISO/TS 16949 and ISO14001 Certified