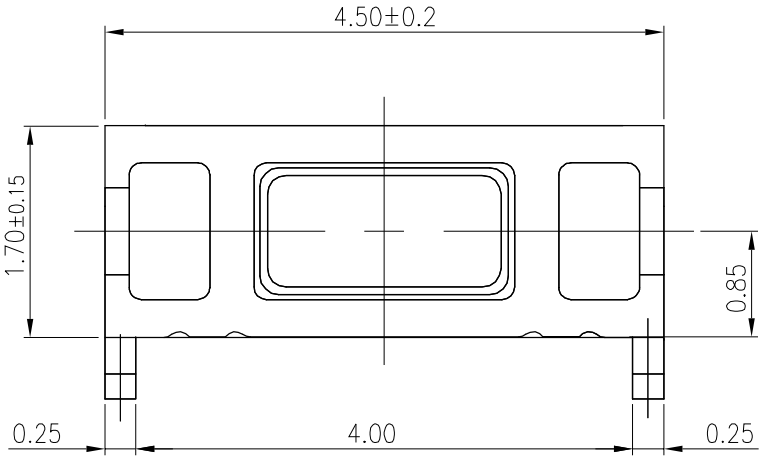

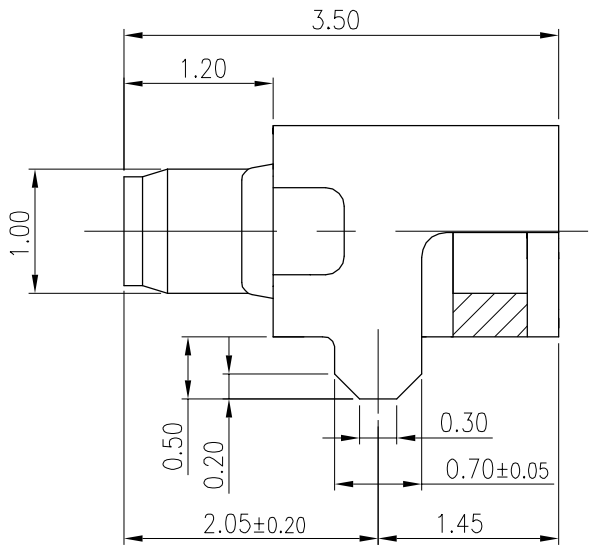

NOTE:

1. ALL DIMENSIONS ARE IN MILLIMETERS.
2. GENERAL TOLERANCES MAX.±0.30mm.

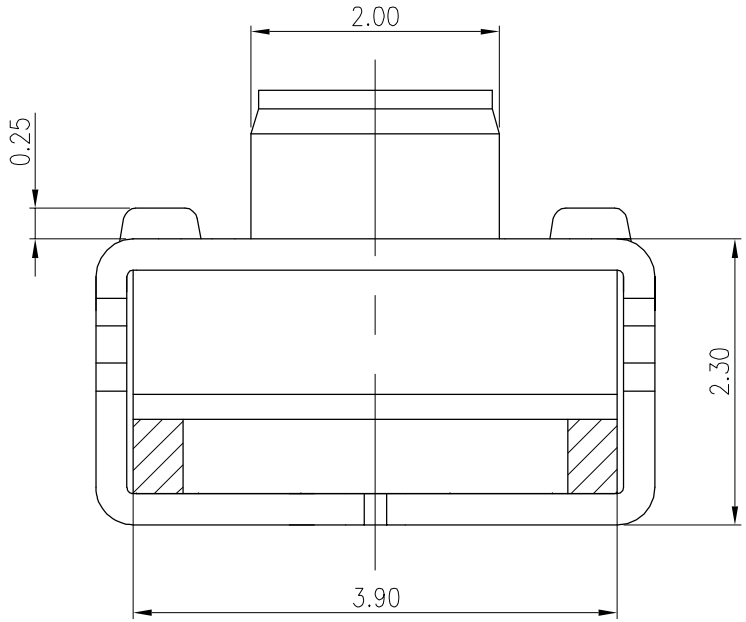

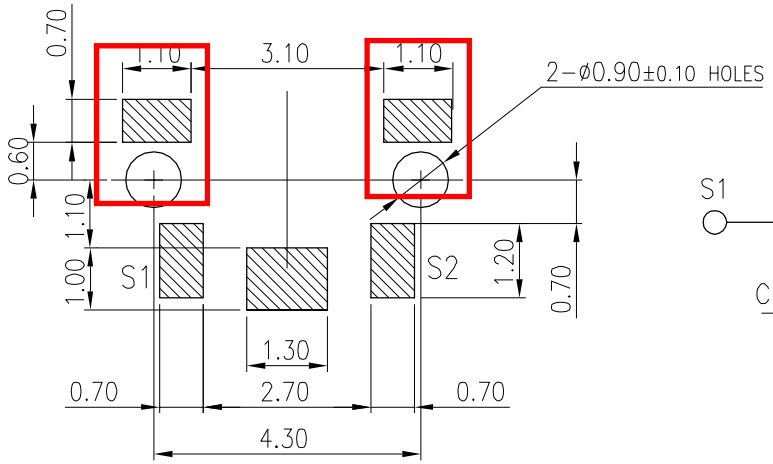

P.C.B LAYOUT
(SCALE=2:1)

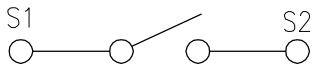

CIRCUIT DIAGRAM

ZONE	REV	DESCRIPTION	DATE	APPD.
4				
3				
2				
1	A1	DWG.REL	2013.10.11	邱明義

APPD:	DATE:	園達實業股份有限公司 DIPTRONICS MANUFCTURING INC.		PART NAME: PCB Side Push Sealed Type
CHKD:	SCALE: 1:10			
DR: 2013.09.11 謝炳仲	REV: A1 / UNITS: mm	PART NO: TCD-C2QR	MAT'L:	DWG NO: RD5PN
DESIGN: 2013.09.11 謝炳仲			FINISH:	

ITEM	DESC	Q'TY	METERIALS	TREATMENT	REMARK
1	STEM	1	HIGH - TEMP THERMOPLASTIC NYLON UL94V - 0	MOLDED BLACK	—
2	FRAME	1	HIGH - TEMP THERMOPLASTIC NYLON UL94V - 0	MOLDED BLACK	—
3	SEALED	1	KAPTON	NONE	—
4	CONTACT	1	STAINLESS STEEL	WITH SILVER PLATING	—
5	SPACER	1	KAPTON	NOEN	—
6	BASE	1	NPG-R	WITH GOLD PLATING	—
7	COVER	1	BRASS	WITH SILVER PLATING	—

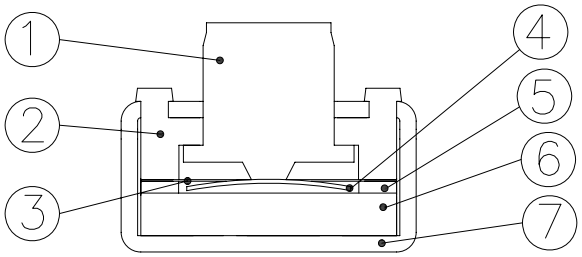

TCD - □ □ □ Q □

Package：
R = Tape & Reel

Soldering：
Q = Halogen Free

Color Of Stem
K=Black

Operating Force：
2 = 160gf

□=Without Post
C = Cover With Post

DIPTRONICS 園達 2014.JAN.22 ISSUED R&D DEPT.

			TITLE ： Right Angle TYPE	APPD. ： 邱明義		
				CHKD. ： 謝炳仲		
A	DWG.REL	邱明義	PRROD. NO. ：TCD-□□□-Q	PR. ： PAGGY		
REV.	ECO. NO.	APPD.	FILE NO. ： E-Q-CT82	REV. ： A	SHEET ： 1/1	

1. Style

This specification describes “TACTILE SWITCH”, mainly used as signal switch of electric devices, with the general requirements of mechanical and electrical characteristic..

1.1 Operating Temperature Range : -40 ℃~+85℃

1.2 Storage Temperature Range : -40℃~+85℃

1.3 The shelf life of product is within 6 months.

2. **Current Range:** 50mA , 12 V DC
3. **Type of Actuation:** Tactile feedback
4. **Test Sequence:**

	ITEM	DESCRIPTION	TEST CONDITIONS	REQUIREMENTS
APPEARANCE	1	Visual Examination	By visual examination check without any out pressure & testing.	There shall be no defects that affect the serviceability of the product.
ELECTRIC PERFORMANCE	2	Contact Resistance	Applying a static load 1.5~2 times the operating force to the center made with a 1 kHz small current contact resistance meter.	100mΩ Max.
	3	Insulation Resistance	Measurements shall be made following application of 100 V DC potential across terminals and cover for 1 minute ±5 seconds.	100MΩ Min.
	4	Dielectric Withstanding Voltage	250 V AC(50Hz or 60Hz) shall be applied across terminals and cover for 1 minute	There shall be no breakdown or flashover.
	5	Bounce	3 to 4 operations at a rate of 1 cycles per second 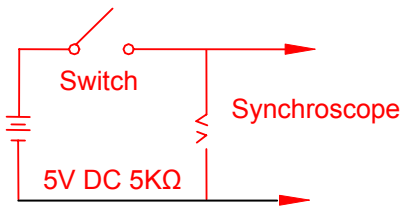	20 m seconds Max. 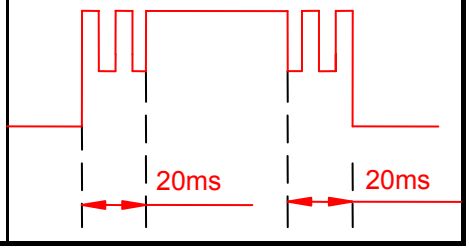

MECHANICAL PERFORMANCE	6	Operating Force	Applied in the direction of operation. 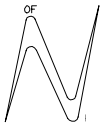	OF	160g ± 50g (1.56N±0.49N)
	7	Stroke	Placing the switch such that the direction of switch operation is vertical and then gradually increasing the load applied to the stem, the stroke distance for the stem to come to a stop shall be measured.	0.2±0.1mm	
	8	Stop Strength	Placing the switch such that the direction of switch operation is horizontal, a static load of 3 kgf(29.4N) shall be applied in the direction of stem operation for a period of 15 seconds	1)As shown in item 4~7 2)Contact Resistance: 200mΩ Max 3)Insulation Resistance: 10MΩ Min	
	9	Solder Heat Resistance	■SMT Type ~TCD Series (PCB is 1.2 ㎜ in thickness)	①Shall be free from pronounced backlash and falling-off or breakage terminals ②As shown in item 4、5 ③Contact Resistance: 200mΩ Max ④ Insulation Resistance: 10MΩ Min	
	10	Vibration	Shall be vibrated in accordance with Method 201A of MIL-STD-202F 1) Swing distance=1.5mm 2) Frequency: 10-55-10Hz in 1-min/cycle. 3) Direction: 3 vertical directions including the directions of operation 4) Test time: 2 hours each direction	1)As shown in item 4~7 2)Contact Resistance: 200mΩ Max 3)Insulation Resistance: 10MΩ Min	
	11	Shock	Shall be shocked in accordance with Method 213B condition A of MIL-STD-202F 1) Acceleration; 50G 2) Action time:11±1m seconds 3) Testing Direction: 6 sides 4) Test Cycle: 3 times in each direction	Ditto	

DURABILITY	12	Operating Life	Measurements shall be made following the test forth below: 1)5 mA,5 VDC resistive load 2)Applying a static load the operating force to the center of the stem in the direction of operation 3)Cycle of Operation: 100,000 cycle's Min	1)As shown in item 4、5 2)Operating force:±50% of initial force. 3)Contact Resistance: 200mΩ Max 4)Insulation Resistance: 10MΩ Min 5)Bounce: 20 m seconds Max
WEATHER-PROOF	13	Resistance Low Temperature	Following the test set forth below the sample shall be left in normal temperature and humidity conditions for 1 hour before the measurements are made: 1) Temperature:-40±2℃ 2) Time: 96 hours	1)As shown in item 4~7 2)Contact Resistance: 200mΩ Max 3)Insulation Resistance: 10MΩ Min
	14	Heat Resistance	Following the test set forth below the sample shall be left in normal temperature and humidity conditions for 1 hour before the measurements are made: 1) Temperature:85±2℃ 2) Time: 96 hours	Ditto
	15	Humidity Resistance	Following the test set forth below the sample shall be left in normal temperature and humidity conditions for 1 hour before the measurements are made: 1) Temperature:60±2℃ 2) Relative Humidity: 90~95% 3) Time: 96 hours	Ditto

5. SOLDERING CONDITIONS:

■ Condition for Soldering TCD Series

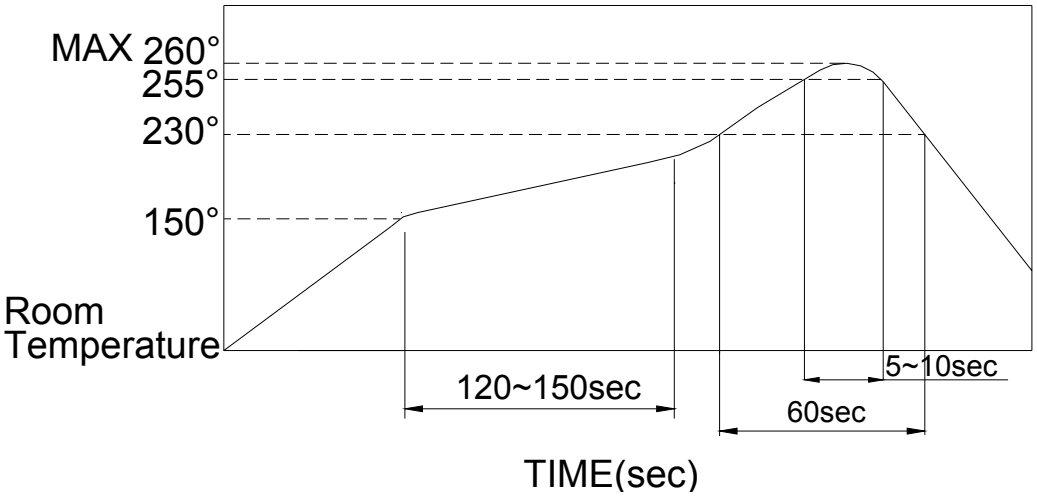

■ The condition mentioned above is the temperature on the Cu foil of the PCB surface. There are cases where board's temperature greatly differs from switch's surface be used not to allow switch's surface temperature to exceed 260℃.

■ Manual Soldering

Soldering Temperature	350℃ MAX.
Continuous Soldering Time	5 second MAX.

■ Precautions in Handling

1. Care should be exercised so that flux from the upper part of the printed circuit board does not adhere to the switch.
2. Except for washable type do not wash the switch

■ Notes on storage conditions:

Do not store in the following environment or it may affect product's function and solderbility:

1. temperature of -10 (max) ~ +40 (min) ℃ & humidity at 85% (min)
2. environment with corrosive gas
3. storage over 6 months
4. place of direct sunlight

Store with proper packaging conditions and to avoid loading heavy force

We suggest to use the products within 3 months or at least 6 months.

After opening the package, the rest products must be stored in the appropriate moisture-proof & airtight environment.