STRADA-T-DN

Beam for area lighting with shorter illumination distances optimized for CREE XP-G and XP-E. Assembly with installation tape.

TECHNICAL SPECIFICATIONS:

Dimensions	19.6 x 15.5 mm
Height	8.8 mm
Fastening	tape, pin, screw
ROHS compliant	yes

MATERIAL SPECIFICATIONS:

Component	Type	Material	Colour	Finish
STRADA-T-DN	Single lens	PMMA	clear	
VOSU-WU-M-365-TAPE	Tape			

ORDERING INFORMATION:

Component		Qty in box	MOQ	MPQ	Box weight (kg)
CA11416_STRADA-T-DN » Box size: 451 x 273 x 197 mm	Single lens	3360	240	240	5.6

LEDiL is a registered trademark of LEDiL Oy in the European Union, USA, and certain other countries.

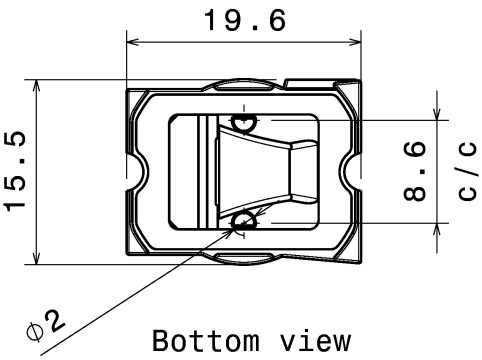

Bottom view

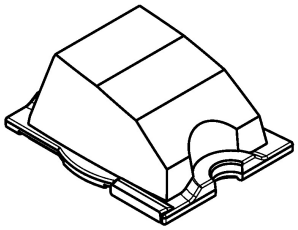

Isometric view

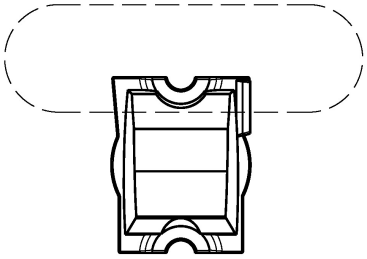

Beam direction

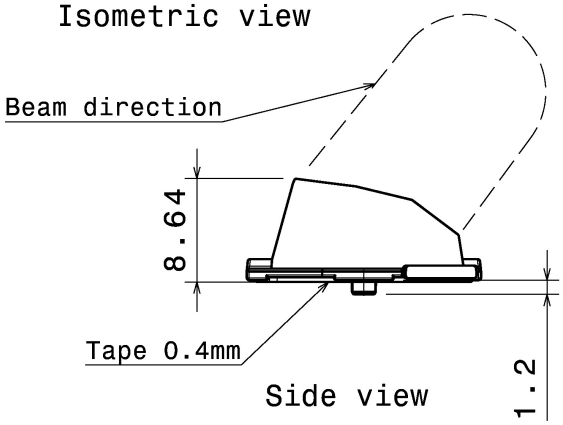

Side view

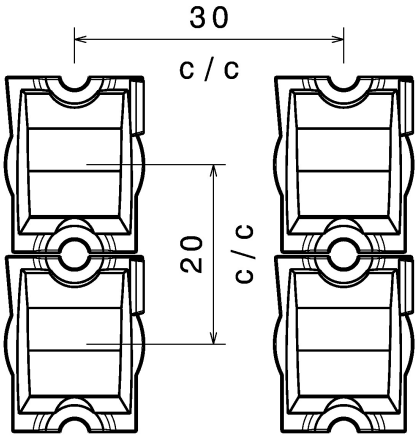

Strada lens arrangement recommendation

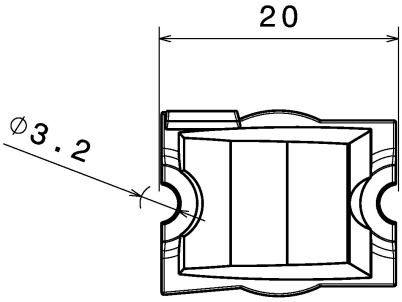

Top view

MATERIALS:
LENS: PMMA
TAPE: PU Foam

Tolerances if not otherwise shown
According to DIN ISO 2768-1
Linear measures: class C
According to DIN ISO 2768-2
Form and position: class L

Ledil Oy
Salorankatu 10
FIN 24240 SALO
Finland

THIRD ANGLE PROJECTION:

DRAWING TITLE
CA11416_STRADA-T-DN

This drawing is the property of LEDiL Oy. It may not be reproduced, copied or communicated without a written agreement with LEDiL Oy."

SIZE	PART NUMBER
A4	CA11416

SCALE	WEIGHT	SHEET
2:1	1,31 g	1/1

PHOTOMETRIC DATA (MEASURED):

CREE

LED	XB-D
FWHM	Asymmetric
Efficiency	91 %
LEDs/each optic	1
Light colour	White
Required components:	

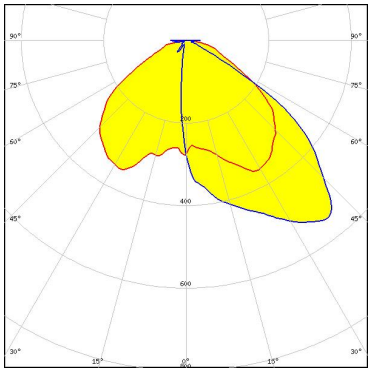

CREE

LED	XP-E
FWHM	Asymmetric
Efficiency	92 %
LEDs/each optic	1
Light colour	White
Required components:	

CREE

LED	XP-G
FWHM	Asymmetric
Efficiency	92 %
LEDs/each optic	1
Light colour	White
Required components:	

LG Innotek

LED	H35B0 (LEMWA32)
FWHM	Asymmetric
Efficiency	91 %
Peak intensity	0.5 cd/lm
LEDs/each optic	1
Light colour	White
Required components:	

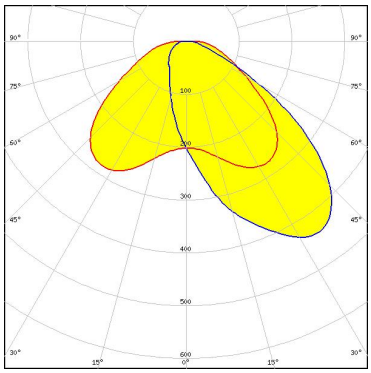

LEDiL is a registered trademark of LEDiL Oy in the European Union, USA, and certain other countries.

PHOTOMETRIC DATA (MEASURED):

LG Innotek

LED	H35C0 (LEMWA33)
FWHM	Asymmetric
Efficiency	89 %
Peak intensity	0.5 cd/lm
LEDs/each optic	1
Light colour	White
Required components:	

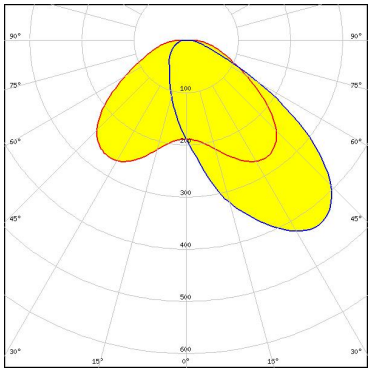

LUMILEDS

LED	LUXEON A
FWHM	Asymmetric
Efficiency	92 %
LEDs/each optic	1
Light colour	White
Required components:	

LUMILEDS

LED	LUXEON Rebel
FWHM	Asymmetric
Efficiency	92 %
LEDs/each optic	1
Light colour	White
Required components:	

LUMILEDS

LED	LUXEON Rebel ES
FWHM	Asymmetric
Efficiency	92 %
LEDs/each optic	1
Light colour	White
Required components:	

LEDiL is a registered trademark of LEDiL Oy in the European Union, USA, and certain other countries.

PHOTOMETRIC DATA (MEASURED):

LUMILEDS

LED	LUXEON TX
FWHM	Asymmetric
Efficiency	91 %
Peak intensity	0.5 cd/lm
LEDs/each optic	1
Light colour	White
Required components:	

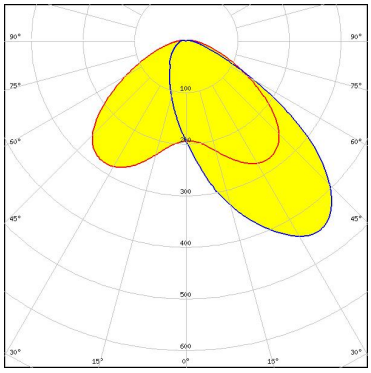

LUMILEDS

LED	LUXEON Z ES
FWHM	Asymmetric
Efficiency	90 %
Peak intensity	0.5 cd/lm
LEDs/each optic	1
Light colour	White
Required components:	

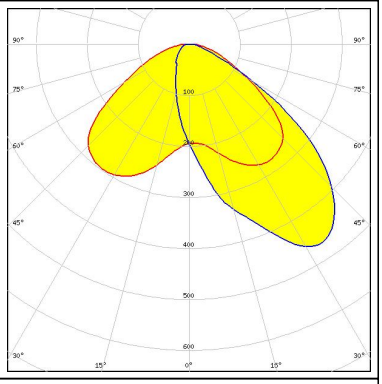

NICHIA

LED	NCSxx19A
FWHM	Asymmetric
Efficiency	92 %
LEDs/each optic	1
Light colour	White
Required components:	

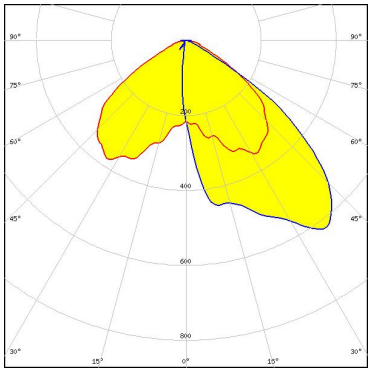

NICHIA

LED	NVSxx19A
FWHM	Asymmetric
Efficiency	92 %
LEDs/each optic	1
Light colour	White
Required components:	

LEDiL is a registered trademark of LEDiL Oy in the European Union, USA, and certain other countries.

PHOTOMETRIC DATA (MEASURED):

OSRAM
Opto Semiconductors

LED	OSLON Square PC
FWHM	Asymmetric
Efficiency	93 %
LEDs/each optic	1
Light colour	White
Required components:	

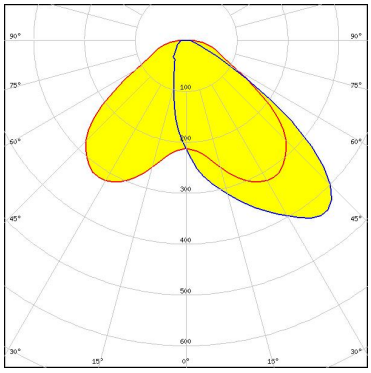

OSRAM
Opto Semiconductors

LED	OSLON SSL 150
FWHM	Asymmetric
Efficiency	92 %
LEDs/each optic	1
Light colour	White
Required components:	

SEOUL SEMICONDUCTOR

LED	Z5
FWHM	Asymmetric
Efficiency	92 %
LEDs/each optic	1
Light colour	White
Required components:	

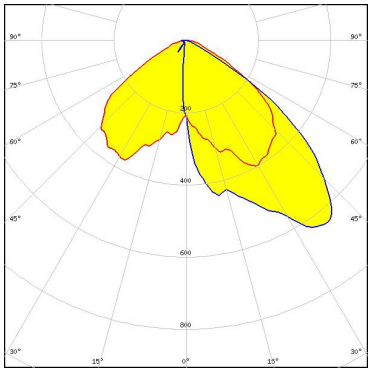

SEOUL SEMICONDUCTOR

LED	Z5M1/Z5M2
FWHM	Asymmetric
Efficiency	92 %
Peak intensity	0.5 cd/lm
LEDs/each optic	1
Light colour	White
Required components:	

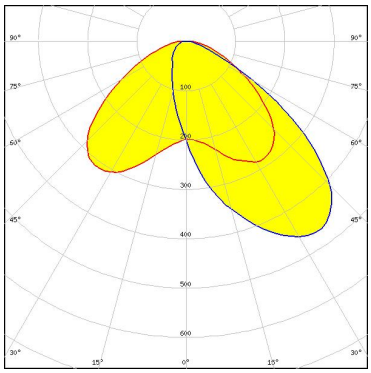

LEDiL is a registered trademark of LEDiL Oy in the European Union, USA, and certain other countries.

PHOTOMETRIC DATA (MEASURED):

SHARP

LED	Double Dome (GM2BB)
FWHM	Asymmetric
Efficiency	92 %
LEDs/each optic	1
Light colour	White

Required components:

LEDiL is a registered trademark of LEDiL Oy in the European Union, USA, and certain other countries.

PHOTOMETRIC DATA (SIMULATED):

LUMILEDS

LED	LUXEON T
FWHM	Asymmetric
Efficiency	91 %
LEDs/each optic	1
Light colour	White
Required components:	

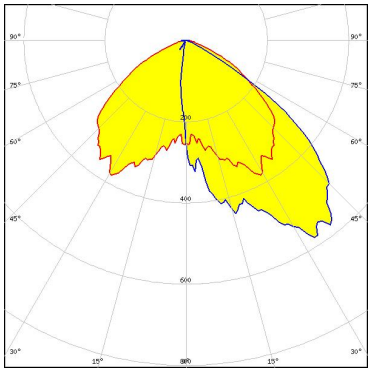

NICHIA

LED	NVSxx19B/NVSxx19C
FWHM	Asymmetric
Efficiency	90 %
LEDs/each optic	1
Light colour	White
Required components:	

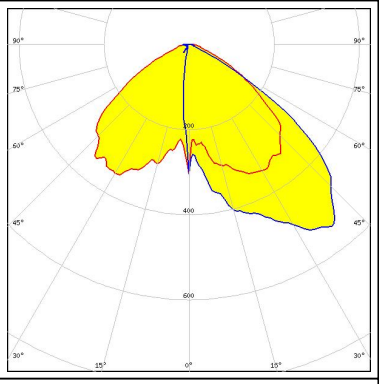

OSRAM
Opto Semiconductors

LED	OSLON SSL 80
FWHM	Asymmetric
Efficiency	93 %
Peak intensity	0.7 cd/lm
LEDs/each optic	1
Light colour	White
Required components:	

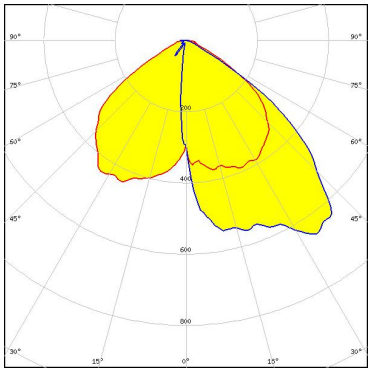

LEDiL is a registered trademark of LEDiL Oy in the European Union, USA, and certain other countries.

GENERAL INFORMATION:

NOTE: The typical beam angle will be changed by different color, chip size and chip position tolerance. The typical total beam angle is the full angle measured where the luminous intensity is half of the peak value.

MATERIALS:

As part of our continuous research and improvement processes, and to ensure the best possible quality and availability of our products, LEDiL reserves the right to change material grades without notice.

PRODUCT DATA USER AGREEMENT AND DISCLAIMER:

The measured data in the provided downloadable LEDiL Product Datasheets and Mechanical 2D-Drawings is rounded and provided as reference for planning. LEDiL Oy's optical specifications have been verified by conducting performance testing of the products in accordance with the company's quality system. The reported data are averaged results of multiple measurements with typical variation. LEDiL Oy reserves the right to without prior notification make changes and improvements to its products.

LEDiL Oy assumes neither warranty, nor guarantee nor any other liability of any kind for the contents and correctness of the provided data. The provided data has been generated with highest diligence but the provided data may in reality not represent the complete possible variation range of all intrinsic parameters. Therefore, in certain cases a deviation from the provided data could occur.

LEDiL Oy reserves the right to undertake technical changes of its products without further notification which could lead to changes in the provided data. LEDiL Oy assumes no liability of any kind for the possible deviation from any provided data or any other damage resulting from the usage of the provided data.

The user agrees to this disclaimer and user agreement with the download or usage of the provided files.

LEDiL Oy
Joensuunkatu 13
FI-24240 SALO
Finland

LEDiL Inc.
228 West Page Street
Suite D
Sycamore IL 60178
USA

Local sales and technical support
www.ledil.com/
where_to_buy

Shipping locations
Salo, Finland
Hong Kong, China

Distribution Partners
www.ledil.com/
where_to_buy

LEDiL is a registered trademark of LEDiL Oy in the European Union, USA, and certain other countries.