THIS DRAWING IS UNPUBLISHED. RELEASED FOR PUBLICATION -,- .
© COPYRIGHT - By - ALL RIGHTS RESERVED.

LOC	DIST
GP	00

REVISIONS

P	LTR	DESCRIPTION	DATE	DWN	APVD
	G	REVISED PER ECO-13-005685	10APR2013	CJV	SLB

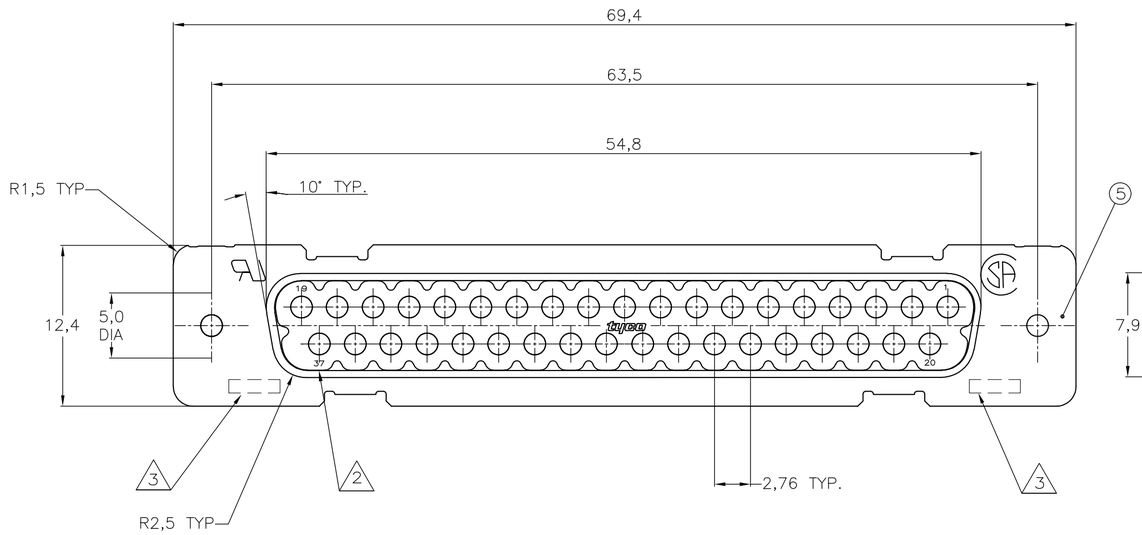

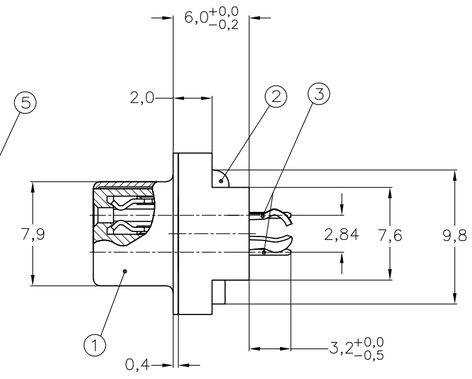

ITEM NO	DESCRIPTION OF ACCESSORY	1-338316-2	2-338316-2	3-338316-2	4-338316-2	5-338316-2	6-338316-2	7-338316-2	8-338316-2	9-338316-2
5	BUSHING WITH THROUGH-HOLE 3,1 DIA					2				
5	BUSHING WITH THREAD 4-40 UNC		2				2			
5	BUSHING WITH THREAD M3			2				2		
4	FEMALE SCREWLOCK WITH THREAD 4-40 UNC				2				2	
4	FEMALE SCREWLOCK WITH THREAD M3					2				2
6	BOARDLOCK		2	2	2	2				

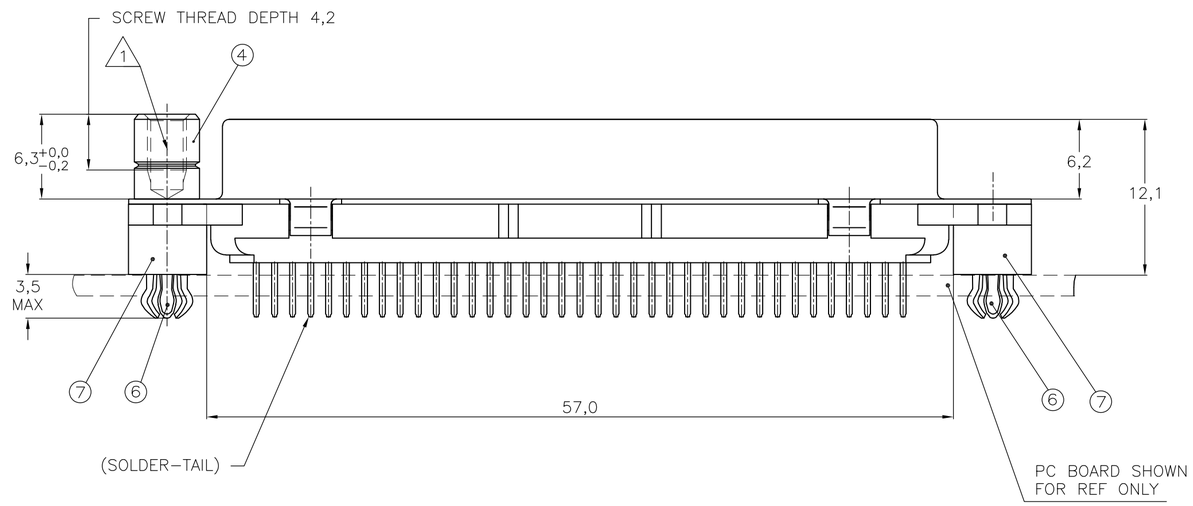

1. GROOVE INDICATES VERSION WITH 4-40 UNC INNER THREAD; WITHOUT GROOVE INDICATES VERSION WITH M3 INNER THREAD.
2. CAVITY IDENTIFICATION AT FRONT SIDE ONLY.
3. PART NUMBER AND DATE CODE.
4. WHEN BOARDLOCKS ARE USED, CONNECTOR CAN BE USED FOR PCB THICKNESS OF 1,6 ONLY.
5. AIR AND CREEPAGE DISTANCES ACCORDING TO DIN 41652.
6. CONTACT FINISH: GOLD FLASH OVER PALLADIUM-NICKEL PLATE, OR GOLD PLATE ON THE MATING SURFACES, TIN PLATE ON THE SOLDER-TAILS, NICKEL UNDERPLATE ON THE ENTIRE CONTACT. MATING SURFACE FINISH MEETS PERFORMANCE LEVEL 2 PER DIN 41652.

338316

ITEM NO/MATERIAL :

1	SHELL	= BRIGHT TIN PLATED STEEL
2	HOUSING	= GLASS FILLED POLYESTER, COLOR : BLACK
3	CONTACTS	= PHOSPHOR BRONZE (PLATING : SEE TABLE ABOVE)
4	FEMALE SCREWLOCK	= TIN PLATED STEEL (INNER THREAD 4-40 UNC OR M3)
5	BUSHING	= TIN PLATED STEEL (INNER THREAD 4-40 UNC OR M3 OR 3,1 DIA THROUGH-HOLE)
6	BOARDLOCK	= TIN PLATED PHOSPHOR BRONZE
7	STAND OFF	= GLASS FILLED NYLON, UL95V-0 RATED COLOR : BLACK

RECOMMENDED P.C. BOARD HOLE-LAYOUT

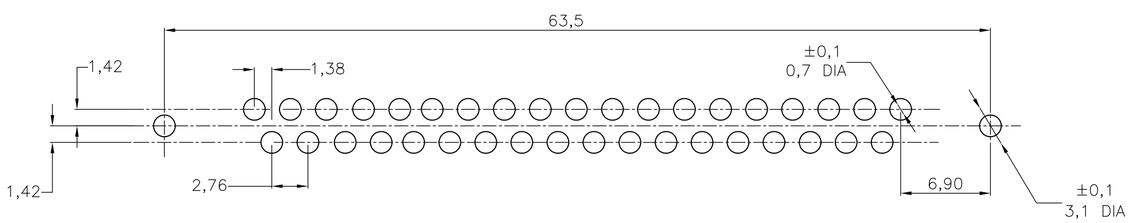

THIS DRAWING IS A CONTROLLED DOCUMENT.
DIMENSIONING AND TOLERANCING PER ASME Y14.5M-2009

DIMENSIONS: mm

TOLERANCES UNLESS OTHERWISE SPECIFIED:

0 PLC	±	-
1 PLC	±	0.3
2 PLC	±	0.15
3 PLC	±	-
4 PLC	±	-
ANGLES		± 2°

MATERIAL -

FINISH -

DWN	J.v.LIEMPT	01JUL97
CHK	C.SOUISA	09SEP97
APVD	E.LEIJTENS	09SEP97
PRODUCT SPEC	—	
APPLICATION SPEC	—	
WEIGHT	—	

TE Connectivity

NAME: HDP-20 SIZE 4 VERTICAL+ RECEPTACLE HEADER; WITH SOLDER CONTACTS

SIZE	CAGE CODE	DRAWING NO	RESTRICTED TO
A2	00779	C-338316	—

CUSTOMER DRAWING | SCALE NTS | SHEET 1 OF 1 | REV G