CMOS Analog Switches

(Obsolete for non-hermetic. Use DG304B Series as pin-for-pin replacements.)

FEATURES

- ±15-V Input Range
- Fast Switching—t_{ON}: 110 ns
- Low $r_{DS(on)}$: 30 Ω
- Single Supply Operation
- CMOS Logic Levels
- Micropower: 30 nW

BENEFITS

- Full Rail-to-Rail Analog Signal Range
- Low Signal Error
- Wide Dynamic Range
- Low Power Dissipation

APPLICATIONS

- Low Level Switching Circuits
- Programmable Gain Amplifiers
- Portable and Battery Powered Systems

DESCRIPTION

The DG304A_MIL through DG307A_MIL series of monolithic CMOS switches were designed for applications in communications, instrumentation and process control. This series is well suited for applications requiring fast switching and nearly flat on-resistance over the entire analog range.

Designed on the Vishay Siliconix PLUS-40 CMOS process to achieve low power consumption and excellent on/off switch performance, these switches are ideal for battery powered applications, without sacrificing switching speed. Break-before-make switching action is guaranteed, and an epitaxial layer prevents latchup. Single supply operation (for positive switch voltages) is allowed by connecting the V– rail to 0 V.

Each switch conducts equally well in both directions when on, and blocks up to the supply voltage when off. These switches are CMOS input compatible.

FUNCTIONAL BLOCK DIAGRAM AND PIN CONFIGURATION

DG304A_MIL
Dual-In-Line

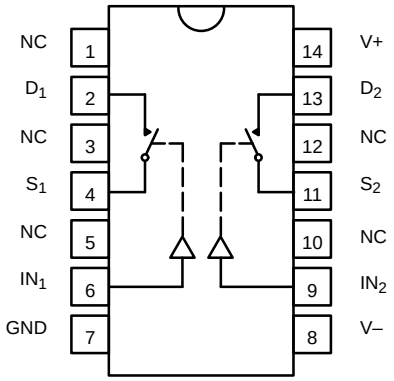

Top View

DG304A_MIL
Metal Can

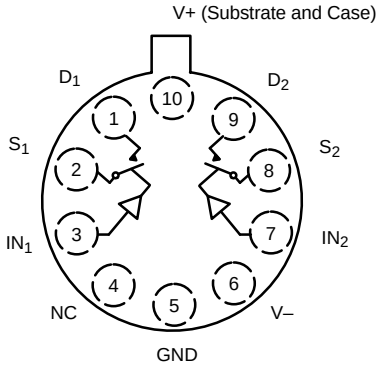

Top View

TRUTH TABLE	
Logic	**Switch**
0	OFF
1	ON

Logic "0" ≤ 3.5 V
Logic "1" ≥ 11 V

FUNCTIONAL BLOCK DIAGRAM AND PIN CONFIGURATION

DG305A_MIL
Dual-In-Line

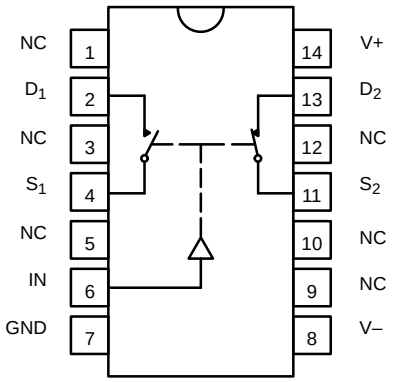

Top View

DG305A_MIL
Metal Can

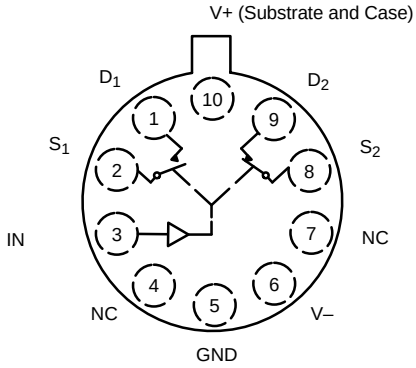

Top View

TRUTH TABLE		
Logic	**SW_1**	**SW_2**
0	OFF	ON
1	ON	OFF

Logic "0" ≤ 3.5 V
Logic "1" ≥ 11 V

DG306A_MIL
Dual-In-Line

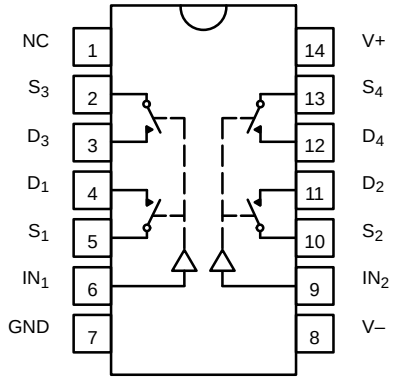

Top View

TRUTH TABLE	
Logic	**Switch**
0	OFF
1	ON

Logic "0" ≤ 3.5 V
Logic "1" ≥ 11 V

DG307A_MIL
Dual-In-Line

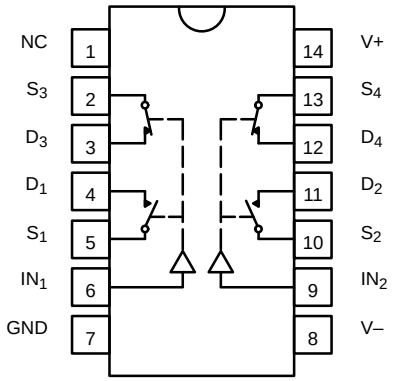

Top View

Four SPST Switches per Package

TRUTH TABLE		
Logic	**SW_1, SW_2**	**SW_3, SW_4**
0	OFF	ON
1	ON	OFF

Logic "0" ≤ 3.5 V
Logic "1" ≥ 11 V

ORDERING INFORMATION		
Temp Range	**Package**	**Part Number**
DG304A_MIL		
–55 to 125°C	14-Pin CerDIP	DG304AK/883
		JM38510/11605BCA
	10-Pin Can	JM38510/11605BIA
	14-Pin Sidebraze	JM38510/11605BCC
DG305A_MIL		
–55 to 125°C	14-Pin CerDIP	JM38510/11605BCA
	10-Pin Can	JM38510/11606BIC
	14-Pin Sidebraze	JM38510/11606BCA
DG306A_MIL		
–55 to 125°C	14-Pin CerDIP	DG306AAK/883
		JM38510/11607BCA
	14-Pin Sidebraze	JM38510/11607BCC
DG307A_MIL		
–55 to 125°C	14-Pin CerDIP	DG307AAK
		DG307AAK/883
		JM38510/11608BCA
	14-Pin Sidebraze	JM38510/11608BCC

ABSOLUTE MAXIMUM RATINGS

Voltages Referenced to V–
V+ . . . . . 44 V
GND . . . . . 25 V
Digital Inputs[a], V_S, V_D . . . . . (V–) –2 V to (V+) +2V or 30 mA, whichever occurs first
Current, Any Terminal . . . . . 30 mA
Continuous Current, S or D
(Pulsed at 1 ms, 10% duty cycle max) . . . . . 100 mA
Storage Temperature (AAA, AAK, Suffix) . . . . . –65 to 150°C

Power Dissipation[b]
14-Pin CerDIP[c] . . . . . 825 mW
10-Pin Metal Can[d] . . . . . 450 mW

Notes:
a. Signals on S_X, D_X, or IN_X exceeding V+ or V– will be clamped by internal diodes. Limit forward diode current to maximum current ratings.
b. All leads welded or soldered to PC Board.
c. Derate 6.5 mW/°C above 25°C
d. Derate 6 mW/°C above 75°C

SPECIFICATIONS[a]

Parameter	Symbol	Test Conditions Unless Specified V+ = 15 V, V– = –15 V V_{IN} = 3.5 V or 11 V[f]		Temp[b]	Limits Min[c]	Limits Typ[d]	Limits Max[c]	Unit
Analog Switch								
Analog Signal Range[e]	V_{ANALOG}			Full	–15		15	V
Drain-Source On-Resistance	$r_{DS(on)}$	V_D = ±10 V, I_S = 10 mA		Room Full		30	50 75	Ω
Source Off Leakage Current	$I_{S(off)}$	V_S = ±14 V V_D = ∓14 V		Room Full	–1 –100	±0.1	1 100	nA
Drain Off Leakage Current	$I_{D(off)}$	V_S = ±14 V V_D = ∓14 V		Room Full	–1 –100	±0.1	1 100	nA
Drain On Leakage Current	$I_{D(on)}$	V_D = V_S = ±14 V		Room Full	–2 –200	±0.1	2 200	nA
Digital Control								
Input Current with Input Voltage High	I_{INH}	V_{IN} = 5 V		Room Full	–1 –1	–0.001		µA
		V_{IN} = 15 V		Room Full		0.001	1 1	µA
Input Current with Input Voltage Low	I_{INL}	V_{IN} = 0 V		Room Full	–1 –1	–0.001		µA
Dynamic Characteristics								
Turn-On Time	t_{ON}	See Figure 2		Room		110	250	ns
Turn-Off Time	t_{OFF}	See Figure 2		Room		70	150	ns
Break-Before-Make Time	t_{OPEN}	DG305A_MIL/307A ONLY See Figure 3		Room		50		ns
Charge Injection	Q	C_L = 1 nF, R_{gen} = 0 V_{gen} = 0 V, See Figure 4		Room		30		pC
Source-Off Capacitance	$C_{S(off)}$	f = 1 MHz, V_S = 0 V V_S, V_D = 0 V		Room		14		pF
Drain-Off Capacitance	$C_{D(off)}$	f = 1 MHz, V_S = 0 V V_S, V_D = 0 V		Room		14		pF
Channel-On Capacitance	$C_{D(on)}$	f = 1 MHz, V_S = 0 V V_S, V_D = 0 V		Room		40		pF
Input Capacitance	C_{IN}	f = 1 MHz	V_{IN} = 0 V	Room		6		pF
			V_{IN} = 15 V	Room		7		pF
Off-Isolation	OIRR	V_{IN} = 0 V, R_L = 1 kΩ V_S = 1 V_{rms}, f = 500 kHz		Room		62		dB
Crosstalk (Channel-to-Channel)	X_{TALK}	V_{IN} = 0 V, R_L = 1 kΩ V_S = 1 V_{rms}, f = 500 kHz		Room		74		dB
Power Supplies								
Positive Supply Current	I+	V_{IN} = 15 V or 0 V (All Inputs)		Room Full		0.001	10 100	µA
Negative Supply Current	I–	V_{IN} = 15 V or 0 V (All Inputs)		Room Full	–10 –100	–0.001		µA

Notes:
a. Refer to PROCESS OPTION FLOWCHART.
b. Room = 25°C, Full = as determined by the operating temperature suffix.
c. The algebraic convention whereby the most negative value is a minimum and the most positive a maximum, is used in this data sheet.
d. Typical values are for DESIGN AID ONLY, not guaranteed nor subject to production testing.
e. Guaranteed by design, not subject to production test.
f. V_{IN} = input voltage to perform proper function.

TYPICAL CHARACTERISTICS (25°C UNLESS NOTED)

$r_{DS(on)}$ vs. V_D and ± Power Supply

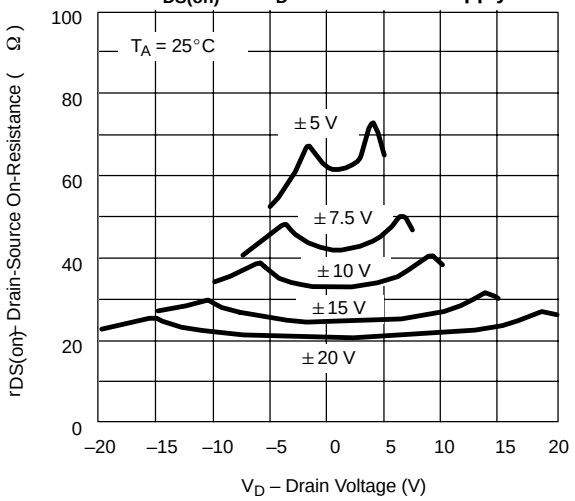

$r_{DS(on)}$ vs. V_D and + Power Supply Voltage

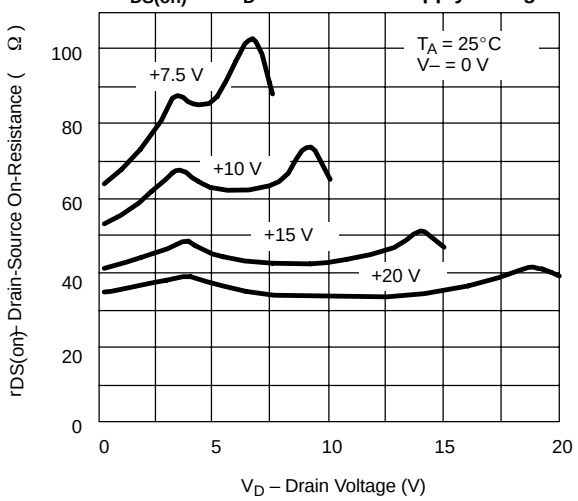

Leakage Currents vs. Analog Voltage

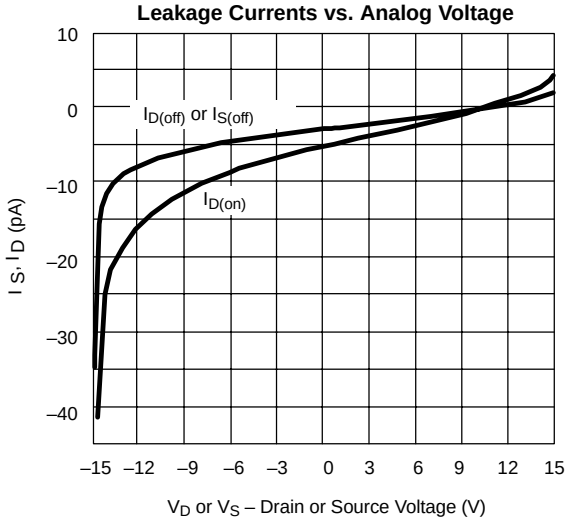

Input Switching Threshold vs. V+ and V– Supply Voltages

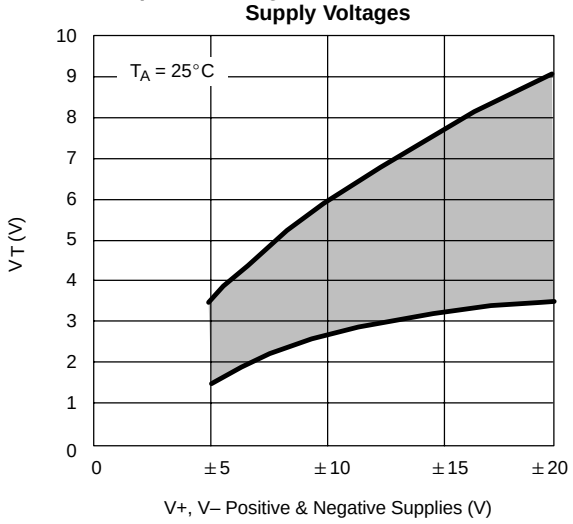

Switching Time vs. Positive Supply Voltage

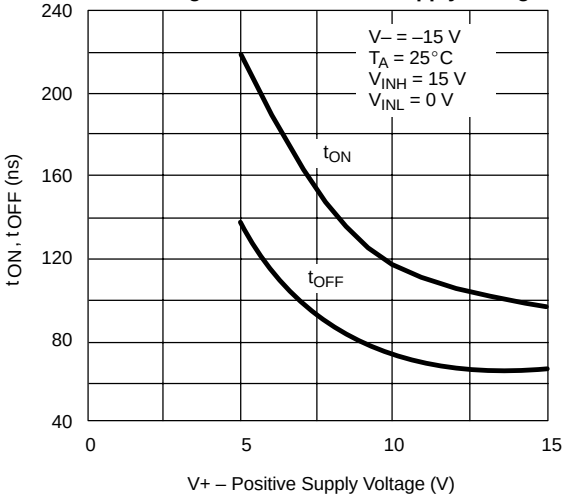

Switching Time vs. Negative Supply Voltage

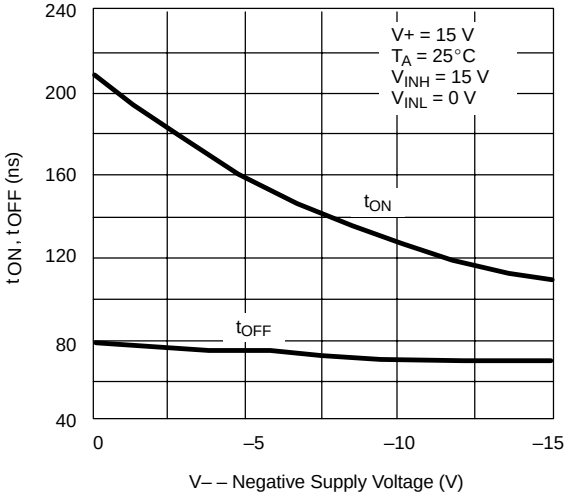

TYPICAL CHARACTERISTICS (25°C UNLESS NOTED)

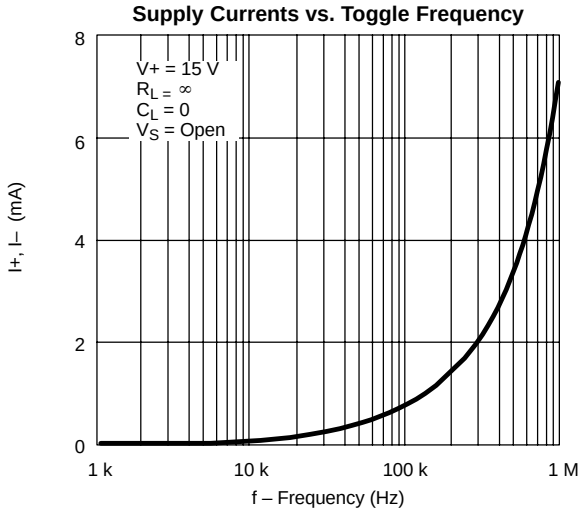

SCHEMATIC DIAGRAM (TYPICAL CHANNEL)

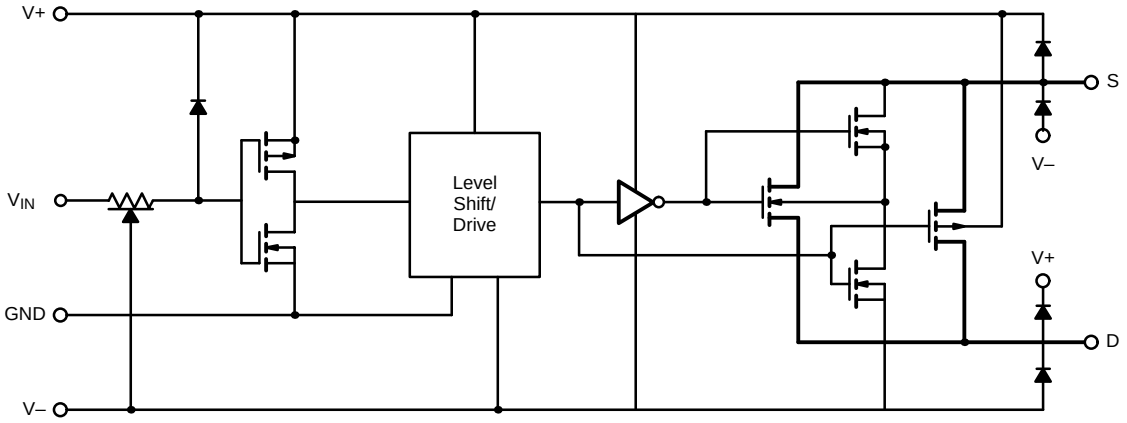

FIGURE 1.

TEST CIRCUITS

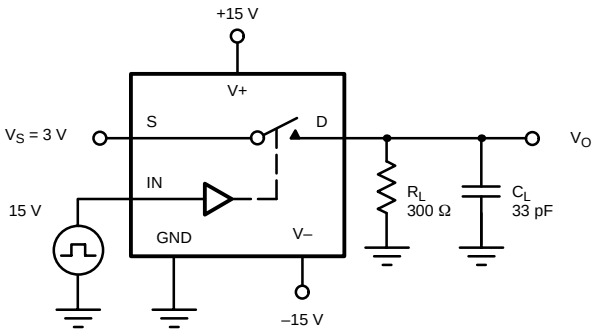

C_L (includes fixture and stray capacitance)

$$V_O = V_S \frac{R_L}{R_L + r_{DS(on)}}$$

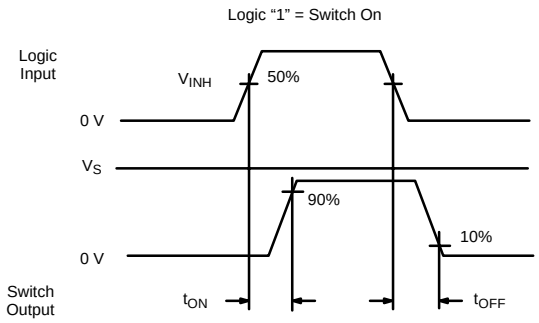

FIGURE 2. Switching Time

TEST CIRCUITS

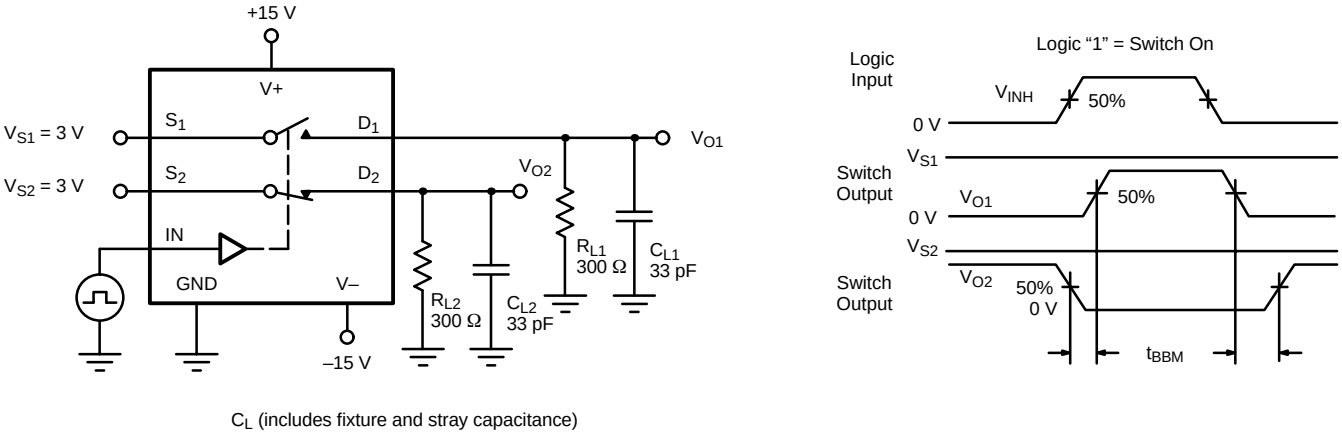

FIGURE 3. Break-Before-Make SPDT (DG305A_MIL, DG307A_MIL)

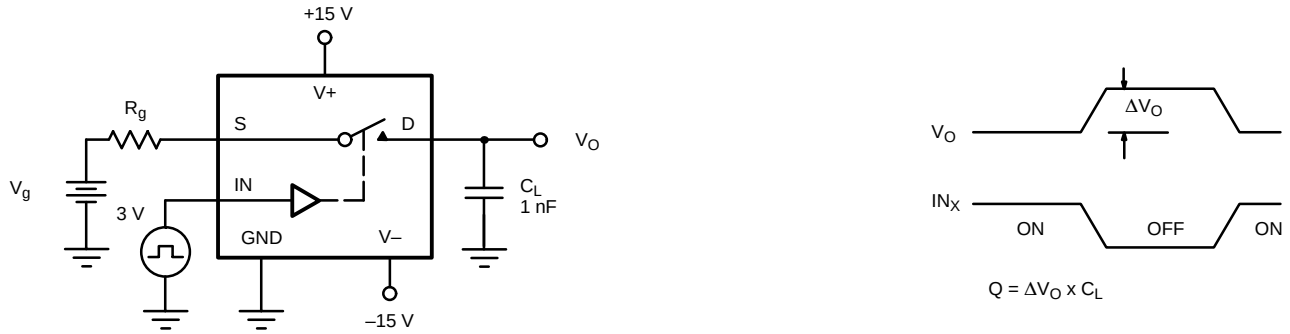

FIGURE 4. Charge Injection

APPLICATION HINTS[a]

V+ Positive Supply Voltage (V)	V– Negative Supply Voltage (V)	GND Voltage (V)	V_{IN} Logic Input Voltage $V_{INH(min)}/V_{INL(max)}$ (V)	V_S or V_D Analog Voltage Range (V)
15	–15	0	11/3.5	–15 to 15
20	–20	0	11/3.5	–20 to 20
15	0	0	11/3.5	0 to 15

Notes:
a. Application Hints are for DESIGN AID ONLY, not guaranteed and not subject to production testing.

APPLICATIONS

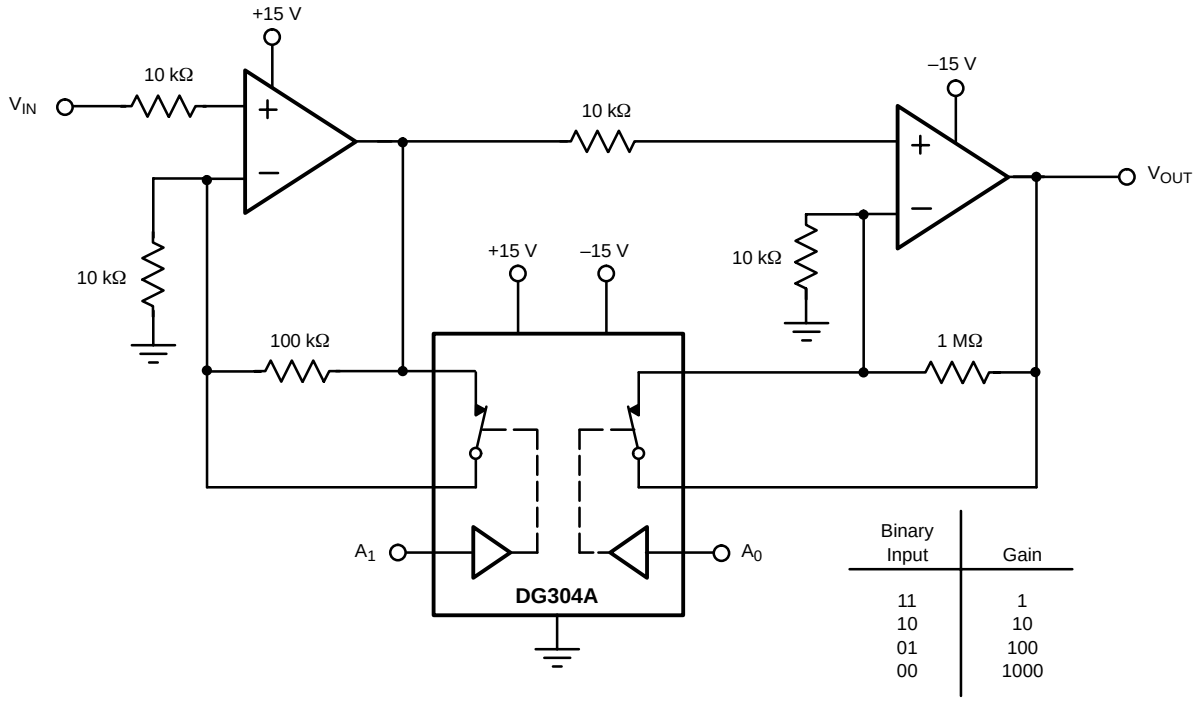

Binary Input	Gain
11	1
10	10
01	100
00	1000

FIGURE 5. Low Power Binary to 10^n Gain Low Frequency Amplifier

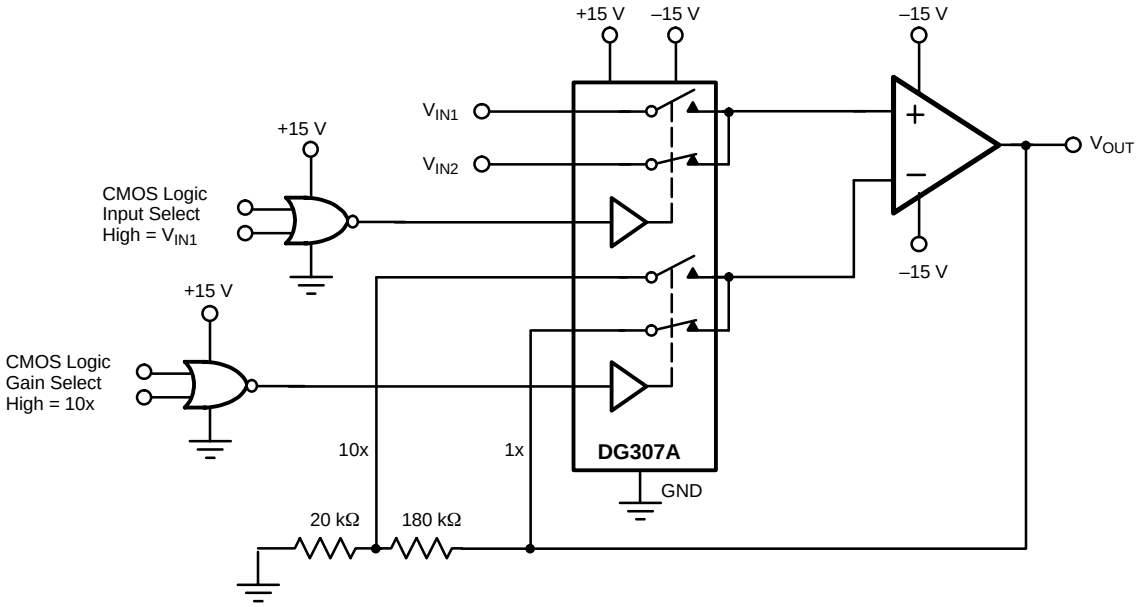

FIGURE 6. Low Power Non-Inverting Amplifier with Digitally Selectable Inputs and Gain

Disclaimer

All product specifications and data are subject to change without notice.

Vishay Intertechnology, Inc., its affiliates, agents, and employees, and all persons acting on its or their behalf (collectively, “Vishay”), disclaim any and all liability for any errors, inaccuracies or incompleteness contained herein or in any other disclosure relating to any product.

Vishay disclaims any and all liability arising out of the use or application of any product described herein or of any information provided herein to the maximum extent permitted by law. The product specifications do not expand or otherwise modify Vishay’s terms and conditions of purchase, including but not limited to the warranty expressed therein, which apply to these products.

No license, express or implied, by estoppel or otherwise, to any intellectual property rights is granted by this document or by any conduct of Vishay.

The products shown herein are not designed for use in medical, life-saving, or life-sustaining applications unless otherwise expressly indicated. Customers using or selling Vishay products not expressly indicated for use in such applications do so entirely at their own risk and agree to fully indemnify Vishay for any damages arising or resulting from such use or sale. Please contact authorized Vishay personnel to obtain written terms and conditions regarding products designed for such applications.

Product names and markings noted herein may be trademarks of their respective owners.