Soft Termination Multilayer Ceramic Chip Capacitors

RoHS

ST Series

MERITEK

FEATURES

- Wide capacitance range in a given size
- High performance to withstanding 5mm of substrate bending test guarantee
- Reduction in PCB bend failure
- Lead free terminations
- High reliability and stability
- RoHS compliant
- HALOGEN compliant

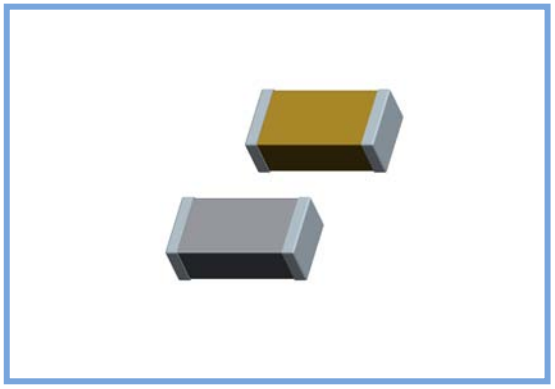

APPLICATIONS

- High flexure stress circuit board
- DC to DC converter
- High voltage coupling/DC blocking
- Back-lighting inverters
- Snubbers in high frequency power convertors

MERITEK Multilayer Ceramic Chip Capacitors supplied in bulk or tape & reel package are ideally suitable for thick-film hybrid circuits and automatic surface mounting on any printed circuit boards, All of MERITEK's MLCC products meet RoHS directive.

ST series use a special material between nickel-barrier and ceramic body. It provides excellent performance to against bending stress occurred during process and provide more security for PCB process.

The nickel-barrier terminations are consisted of a nickel barrier layer over the silver metallization and then finished by electroplated solder layer to ensure the terminations have good solderability. The nickel barrier layer in terminations prevents the dissolution of termination when extended immersion in molten solder at elevated solder temperature.

PART NUMBER SYSTEM

ST 0805 XR 104 K 101

Meritek Series

Size

0603	0805	1206	1210	1812	1825	2220	2225

Dielectric

Code	XR	CG
	X7R	COG(NPO)

Capacitance

Code	8R2	101	223	104
pF	8.2	100	22000	100000
nF	--	0.1	22	100
uF	--	--	0.022	0.1

Tolerance

Code	Tolerance	Code	Tolerance	Code	Tolerance
B	±0.1pF	C	±0.25pF	D	±0.5pF
F	±1%	G	±2%	J	±5%
K	±10%	M	±20%		

Rated Voltage – 2 significant digits + number of zeros.

Code	101	201	251	501	631
	100Vdc	200Vdc	250Vdc	500Vdc	630Vdc

DIMENSION

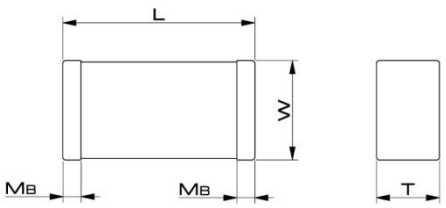

Size Inch (mm)	L(mm)	W(mm)	Tmax(mm)	M_B min (mm)
0603(1608)	1.6±0.2	0.8±0.15	0.95	0.20
0805(2012)	2.1±0.2	1.25±0.2	1.45	0.30
1206(3216)	3.3±0.3	1.6±0.2	1.80	0.30
1210(3225)	3.3±0.4	2.5±0.4	2.90	0.30
1812(4532)	4.5±0.4	3.2±0.3	2.80	0.26
1825(4563)	4.6±0.3	6.3±0.4	2.80	0.26
2220(5750)	5.7±0.4	5.0±0.4	2.80	0.30
2225(5763)	5.7±0.4	6.3±0.4	2.80	0.30

GENERAL ELECTRICAL DATA

Item	Characteristic	
Dielectric	NPO	X7R
Size	1206	0603,0805,1206,1210,1808,1812,1825,2220,2225
Capacitance range*	1.5pF to 220pF	100pF to 4.7uF
Capacitance tolerance	C: ±0.25pF @cap≤5pF D: ±0.5pF @5pF≤cap≤10pF J: ±5%, K: ±10% @cap≥10pF	J: ±5%,K: ±10%,M: ±20%
Rated voltage (WVDC)	100V, 200V, 250V, 500V, 630V	
Tan δ*	Q < 400+20C @cap<30pF Q ≥ 1000 @cap≥30pF	Q ≤ 2.5%
Insulation resistance at Ur**	≥10GΩ or RxC ≥100Ω-F whichever is smaller @Ur=100~630V ≥10GΩ @Ur=1000~3000V	≥10GΩ or RxC ≥500Ω-F whichever is smaller
Operating temperature	-55 to +125°C	
Capacitance characteristic	±30ppm	±15%
Termination	Cu(or Ag)/Ni/Sn (lead-free termination)	

*Measured at the condition of 30%~70% related humidity.
NPO: Apply 1.0±0.2Vrms, 1.0MHz±10% for cap ≤ 1000pF and 1.0±0.2Vrms, 1.0kHz±10% for cap>1000pF, 25°C at ambient temperature
X7R: Apply 1.0±0.2Vrms, 1.0kHz±10%, at 25°C ambient temperature
**Measured at 500VDC for 60sec, for Ur > 500VDC

STRUCTURE

Meritek ST series is added a special termination material (Ultra-Buffer or Anti-Bend) between ceramic body and Ni-barrier that can absorb mechanical stress to prevent bending crack occured.

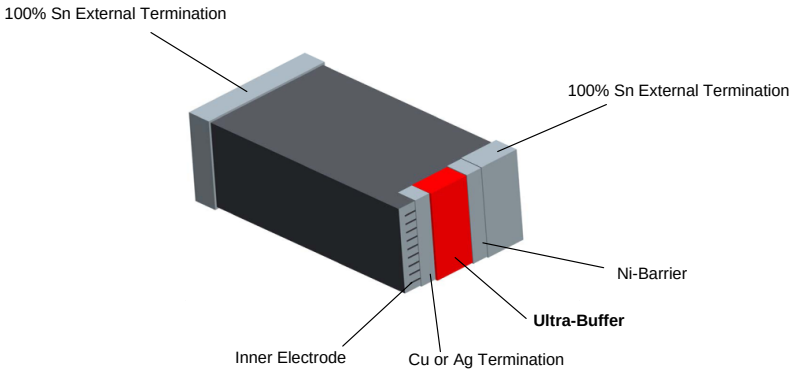

CAPACITANCE RANGE

DIELECTRIC		NP0				
SIZE		1206				
	RATED VOLTAGE (VDC)	100	200	250	500	630
Capacitance	0.5pF (0R5)					
	1.0pF (1R0)					
	1.2pF (1R2)					
	1.5pF (1R5)					
	1.8pF (1R8)					
	2.2pF (2R2)					
	2.7pF (2R7)					
	3.3pF (3R3)					
	3.9pF (3R9)					
	4.7pF (4R7)					
	5.6pF (5R6)					
	6.8pF (6R8)					
	8.2pF (8R2)					
	10pF (100)					
	12pF (120)					
	15pF (150)					
	18pF (180)					
	22pF (220)					
	27pF (270)					
	33pF (330)					
	39pF (390)					
	47pF (470)					
	56pF (560)					
	68pF (680)					
	82pF (820)					
	100pF (101)					
	120pF (121)					
	150pF (151)					
	180pF (181)					
	220pF (221)					
	270pF (271)					
	330pF (331)					
	390pF (391)					
	470pF (471)					
	560pF (561)					
	680pF (681)					
	820pF (821)					
	1,000pF (102)					
	1,200pF (122)					
	1,500pF (152)					
	1,800pF (182)					
	2,200pF (222)					
	2,700pF (272)					
	3,300pF (332)					
	3,900pF (392)					
	4,700pF (472)					
	5,600pF (562)					
	6,800pF (682)					
	8,200pF (822)					

Soft Termination Multilayer Ceramic Chip Capacitors

RoHS

ST Series

MERITEK

DIELECTRIC		X7R																
SIZE		0603			0805				1206					1210				
RATED VOLTAGE (VDC)		100	200	250	100	200	250	500	100	200	250	500	630	100	200	250	500	630
Capacitance	100pF (101)																	
	120pF (121)																	
	150pF (151)																	
	180pF (181)																	
	220pF (221)																	
	270pF (271)																	
	330pF (331)																	
	390pF (391)																	
	470pF (471)																	
	560pF (561)																	
	680pF (681)																	
	820pF (821)																	
	1,000pF (102)																	
	1,200pF (122)																	
	1,500pF (152)																	
	1,800pF (182)																	
	2,200pF (222)																	
	2,700pF (272)																	
	3,300pF (332)																	
	3,900pF (392)																	
	4,700pF (472)																	
	5,600pF (562)																	
	6,800pF (682)																	
	8,200pF (822)																	
	0.010μF (103)																	
	0.012μF (123)																	
	0.015μF (153)																	
	0.018μF (183)																	
	0.022μF (223)																	
	0.027μF (273)																	
	0.033μF (333)																	
	0.039μF (393)																	
	0.047μF (473)																	
	0.056μF (563)																	
	0.068μF (683)																	
	0.082μF (823)																	
	0.10μF (104)																	
	0.12μF (124)																	
	0.15μF (154)																	
	0.18μF (184)																	
	0.22μF (224)																	
	0.27μF (274)																	
	0.33μF (334)																	
	0.39μF (394)																	
	0.47μF (474)																	
	0.56μF (564)																	
	0.68μF (684)																	
	0.82μF (824)																	
	1.00μF (105)																	
	1.20μF (125)																	
	1.50μF (155)																	
	1.80μF (185)																	
	2.20μF (225)																	

Soft Termination Multilayer Ceramic Chip Capacitors

RoHS

ST Series

MERITEK

DIELECTRIC		X7R																			
SIZE		1812					1825					2220					2225				
RATED VOLTAGE		100	200	250	500	630	100	200	250	500	630	100	200	250	500	630	100	200	250	500	630
Capacitance	100pF (101)																				
	120pF (121)																				
	150pF (151)																				
	180pF (181)																				
	220pF (221)																				
	270pF (271)																				
	330pF (331)																				
	390pF (391)																				
	470pF (471)																				
	560pF (561)																				
	680pF (681)																				
	820pF (821)																				
	1,000pF (102)																				
	1,200pF (122)																				
	1,500pF (152)																				
	1,800pF (182)																				
	2,200pF (222)																				
	2,700pF (272)																				
	3,300pF (332)																				
	3,900pF (392)																				
	4,700pF (472)																				
	5,600pF (562)																				
	6,800pF (682)																				
	8,200pF (822)																				
	0.010μF (103)																				
	0.012μF (123)																				
	0.015μF (153)																				
	0.018μF (183)																				
	0.022μF (223)																				
	0.027μF (273)																				
	0.033μF (333)																				
	0.039μF (393)																				
	0.047μF (473)																				
	0.056μF (563)																				
	0.068μF (683)																				
	0.082μF (823)																				
	0.10μF (104)																				
	0.12μF (124)																				
	0.15μF (154)																				
	0.18μF (184)																				
	0.22μF (224)																				
	0.27μF (274)																				
	0.33μF (334)																				
	0.39μF (394)																				
	0.47μF (474)																				
	0.56μF (564)																				
	0.68μF (684)																				
	0.82μF (824)																				
	1.0μF (105)																				
	1.2μF (125)																				
	1.5μF (155)																				
	1.8μF (185)																				
	2.2μF (225)																				
	2.7μF (275)																				
	3.3μF (335)																				
	3.9μF (395)																				
	4.7μF (475)																				

PACKAGE DIMENSION AND QUANTITY

Size	Thickness (mm)	Paper tape		Plastic tape	
		7" reel	13" reel	7" reel	13" reel
0603 (1608)	0.80+0.15/-0.10	4k	15k		
0805 (2012)	0.80+0.15/-0.10	4k	15k	-	-
	1.25±0.10	-	-	3k	10k
	1.25±0.20	-	-	3k	-
1206 (3216)	0.80±0.10	4k	15k	-	-
	0.95±0.10	-	-	3k	10k
	1.25±0.10	-	-	3k	10k
	1.60±0.20	-	-	2k	-
1210 (3225)	0.95±0.10	-	-	3k	10k
	1.25±0.10	-	-	3k	10k
	1.60±0.20	-	-	2k	-
	2.00±0.20	-	-	1k	-
	2.50±0.40	-	-	1k	-
1812 (4532)	1.25±0.10	-	-	1k	-
	1.60±0.20	-	-	1k	-
	2.00±0.20	-	-	1k	-
	2.50±0.30	-	-	0.5k	3k
1825 (4563)	1.60±0.20	-	-	1k	-
	2.00±0.20	-	-	1k	-
	2.50±0.30	-	-	0.5k	-
2220 (5750)	1.60±0.20	-	-	1k	-
	2.00±0.20	-	-	1k	-
	2.50±0.30	-	-	0.5k	-
2225 (5763)	2.00±0.20	-	-	1k	-
	2.50±0.30	-	-	0.5k	-

Unit: pieces

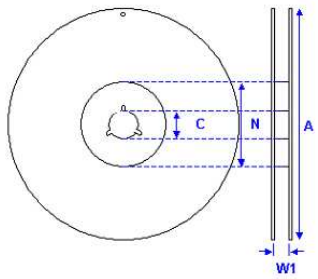

Fig. 4 The dimension of reel

Size	0603, 0805, 1206, 1210			1812,1825 ,2220 ,2225
Reel size	7"	10"	13"	7"
C	13.0+0.5/-0.2	13.0+0.5/-0.2	13.0+0.5/-0.2	13.0+0.5/-0.2
W_1	8.4+1.5/-0	8.4+1.5/-0	8.4+1.5/-0	12.4+2.0/-0
A	178.0±0.10	250.0±1.0	330.0±1.0	178.0±0.10
N	60.0±1.0/-0	100.0±1.0	100±1.0	80.0±1.0

CARDBOARD TAPE DIMESIONS

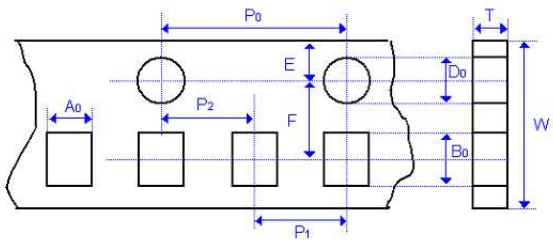

Fig. 2 The dimension of paper tape

EMBOSSED TAPE DIMENSIONS

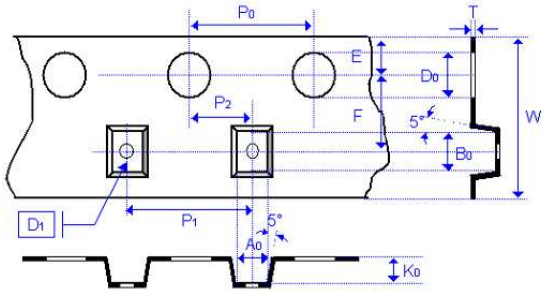

Fig. 3 The dimension of plastic tape

Size	0603	0805		1206			1210	
Chip Thickness	0.80+0.15/-0.10	0.80+0.15/-0.10	1.25±0.10 1.25±0.20	0.80±0.10	0.95±0.10 1.25±0.10	1.60±0.20	0.95±0.10 1.25±0.10 1.60±0.20 2.00±0.20	2.50±0.40
A_0	1.02+0.05/-0.10	1.50±0.10	<1.65	2.00±0.10	<2.00	<2.00	<3.05	<3.10
B_0	1.80±0.10	2.30±0.10	<2.40	3.50±0.10	<3.60	<3.70	<3.80	<4.00
T	0.97±0.05	0.95±0.05	0.23±0.05	0.95±0.05	0.23±0.05	0.23±0.05	0.23±0.05	0.23±0.05
K_0	-	-	<2.50	-	<2.50	<2.50	<2.50	<3.50
W	8.00±0.10	8.00±0.10	8.00±0.10	8.00±0.10	8.00±0.10	8.00±0.10	8.00±0.10	8.00±0.10
P_0	4.00±0.10	4.00±0.10	4.00±0.10	4.00±0.10	4.00±0.10	4.00±0.10	4.00±0.100	4.00±0.10
$10xP_0$	40.00±0.20	40.00±0.20	40.00±0.20	40.00±0.20	40.00±0.20	40.00±0.20	40.00±0.20	40.00±0.20
P_1	4.00±0.10	4.00±0.10	4.00±0.10	4.00±0.10	4.00±0.10	4.00±0.10	4.00±0.10	4.00±0.10
P_2	2.00±0.05	2.00±0.05	2.00±0.05	2.00±0.05	2.00±0.05	2.00±0.05	2.00±0.05	2.00±0.05
D_0	1.55±0.05	1.55±0.05	1.50±0.10/-0	1.55±0.05	1.50±0.10/-0	1.50±0.10/-0	1.50±0.10/-0	1.50±0.10/-0
D_1	-	-	1.00±0.10	-	1.00±0.10	1.00±0.10	1.00±0.10	1.00±0.10
E	1.75±0.05	1.75±0.05	1.75±0.10	1.75±0.10	1.75±0.10	1.75±0.10	1.75±0.10	1.75±0.10
F	3.50±0.05	3.50±0.05	3.50±0.05	3.50±0.05	3.50±0.05	3.50±0.05	3.50±0.05	3.50±0.05

Size	1812		1825		2220		2225	
Chip Thickness	1.25±0.10 1.60±0.20 2.00±0.20	2.50±0.30	1.60±0.20 2.00±0.20	2.50±0.30	1.60±0.20 2.00±0.20	2.50±0.30	2.00±0.20	2.50±0.30
A_0	<3.90	<3.90	<6.80	<6.80	<5.80	<5.80	<6.80	<6.80
B_0	<5.30	<5.30	<5.30	<5.30	<6.50	<6.50	<6.50	<6.50
T	0.25±0.05	0.25±0.05	0.30±0.10	0.30±0.10	0.30±0.10	0.30±0.10	0.30±0.10	0.30±0.10
K_0	<2.50	<3.00	<2.50	<3.10	<2.50	<3.10	<2.50	<3.10
W	12.0±0.20	12.0±0.20	12.0±0.20	12.0±0.20	12.0±0.20	12.0±0.20	12.0±0.20	12.0±0.20
P_0	4.00±0.10	4.00±0.10	4.00±0.10	4.00±0.10	4.00±0.10	4.00±0.10	4.00±0.10	4.00±0.10
$10xP_0$	40.00±0.20	40.00±0.20	40.00±0.20	40.00±0.20	40.00±0.20	40.00±0.20	40.00±0.20	40.00±0.20
P_1	8.00±0.10	8.00±0.10	8.00±0.10	8.00±0.10	8.00±0.10	8.00±0.10	8.00±0.10	8.00±0.10
P_2	2.00±0.05	2.00±0.05	2.00±0.05	2.00±0.05	2.00±0.05	2.00±0.05	2.00±0.05	2.00±0.05
D_0	1.50+0.10/-0	1.50+0.10/-0	1.50+0.10/-0	1.50+0.10/-0	1.50+0.10/-0	1.50+0.10/-0	1.50+0.10/-0	1.50+0.10/-0
D_1	1.50±0.10	1.50+/-0.10	1.50±0.10	1.50±0.10	1.50±0.10	1.50±0.10	1.50±0.10	1.50±0.10
E	1.75±0.10	1.75+/-0.1	1.75±0.1	1.75±0.10	1.75±0.1	1.75±0.10	1.75±0.10	1.75±0.10
F	5.50±0.05	5.50+/-0.05	5.50±0.05	5.50±0.05	5.50±0.05	5.50±0.05	5.50±0.05	5.50±0.05

APPLICATION NOTES

STORAGE

To prevent the damage of solderability of terminations, the following storage conditions are recommended:

Indoors under 5 ~ 40℃ and 20% ~ 70% RH.

No harmful gases containing sulfuric acid, ammonia, hydrogen sulfide or chlorine.

Packaging should not be opened until the capacitors are required for use. If opened, the pack should be re-sealed as soon as is practicable. Taped product should be stored out of direct sunlight, which might promote deterioration in tape or adhesion performance. The capacitors should be used within 6 months and checked the solderability before use.

HANDLING

Chip capacitors are dense, hard, brittle, and abrasive materials. They are liable to suffer mechanical damage, in the form of cracks or chips. Chip Capacitors should be handled with care to avoid contamination or damage. To use vacuum or plastic tweezers to pick up or plastic tweezers is recommended for manual placement. Tape and reeled packages are suitable for automatic pick and placement machine.

PREHEAT

In order to minimize the risk of thermal shock during soldering, a carefully controlled preheat is required. The rate of preheat should not exceed 4℃ per second and the final preheat temperature should be within 100℃ of the soldering temperature for small chips such as 0603, 0805 and 1206, within 50℃ of the soldering temperature for bigger chips such as 1210, 1808, 1812, 1825, 2220 and 2225, etc.

SOLDERING

Use middy activated rosin RA and RMA fluxes do not use activated flux. The amount of solder in each solder joint should be controlled to prevent the damage of chip capacitors caused by the stress between solder, chips, and substrate.

Hand soldering with temperature-controlled iron not exceeding 30 watts and diameter of tip less than 1.2 mm is recommended, tip of iron should not contact the ceramic body directly, and the temperature of iron should be set to not more than 260℃.

For bigger chips such as 1210, 1808, 1812, 1825, 2220 and 2225, etc. wave soldering and hand soldering are no recommended.

Recommended soldering profiles as following:

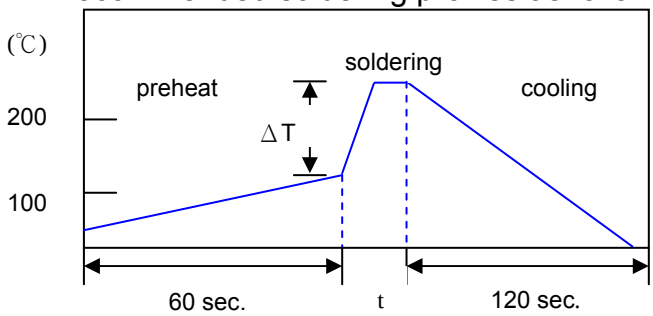

Soldering	Solder Temp.(T)	Soldering Time (t)
Reflow	235 – 260 ℃	< 15 sec.
Wave	230 – 260 ℃	< 5 sec.

Chip Size	ΔT
0603, 0805, 1206	100 ℃
1210, 1808, 1812, 1825, 2220, 2225	50 ℃

COOLING

After soldering, cool the chips and the substrate gradually to room temperature. Natural cooling in air is recommended to minimize stress in the solder joint. A cooling rate not exceeding 4℃ per second should be used when forced cooling is necessary.

CLEANING

All flux residues must be removed by using suitable electronic-grade vapor-cleaning solvents to eliminate contamination that could cause electrolytic surface corrosion. Good results can be obtained by using ultrasonic cleaning of the solvent. The choice of the proper system is depends upon many factors such as component mix, flux, and solder paste and assembly method. The ability of the cleaning system to remove flux residues and contamination from under the chips is very important.

RELIABILITY TEST CONDITIONS AND REQUIREMENTS

<table>
<tr><th>No.</th><th>Item</th><th>Test Condition</th><th>Requirements</th></tr>
<tr><td>1.</td><td>Visual and Mechanical</td><td>---</td><td>* No remarkable defect.
* Dimensions to conform to individual specification sheet.</td></tr>
<tr><td>2.</td><td>Capacitance</td><td>Class I: (NP0)
Cap≤1000pF, 1.0±0.2Vrms, 1MHz±10%
Cap>1000pF, 1.0±0.2Vrms, 1KHz±10%
Class II: (X7R)
1.0±0.2Vrms, 1kHz±10%</td><td>* Shall not exceed the limits given in the detailed spec.</td></tr>
<tr><td>3.</td><td>Q/ D.F. (Dissipation Factor)</td><td></td><td>NP0: Cap≥30pF, Q≥1000; Cap<30pF, Q≥400+20C
X7R: ≤2.5%</td></tr>
<tr><td>4.</td><td>Temperature Coefficient</td><td>With no electrical load.
<table>
<tr><th>T.C.</th><th>Operating Temp</th></tr>
<tr><td>NP0</td><td>-55~125℃ at 25℃</td></tr>
<tr><td>X7R</td><td>-55~125℃ at 25℃</td></tr>
</table></td><td>
<table>
<tr><th>T.C.</th><th>Capacitance Change</th></tr>
<tr><td>NPO</td><td>Within ±30ppm/℃</td></tr>
<tr><td>X7R</td><td>Within ±15%</td></tr>
</table></td></tr>
<tr><td>5.</td><td>Insulation Resistance</td><td>U_R=100V: To apply voltage at U_R for max. 120 sec.
U_R>100V: To apply voltage at U_R (500V max.) for 60 sec.</td><td>Class I (NP0) : ≥100GΩ or RxC≥1000Ω-F whichever is smaller.
Class II (X7R) : ≥10GΩ or RxC≥500Ω-F whichever is smaller.</td></tr>
<tr><td>6.</td><td>Dielectric Strength</td><td>* To apply voltage:
100V =2.5 times of U_R
200V/250V =2 times of U_R
500V =1.5 times of U_R
> 500V =1.2 times of U_R
* Duration: 1 to 5 sec.</td><td>* No evidence of damage or flashover during test.</td></tr>
<tr><td>7.</td><td>Solderability</td><td>* Solder temperature: 235±5℃
* Dipping time: 2±0.5 sec.</td><td>NPO:95% min. coverage of all metalized area.
X7R:75% min. coverage of all metalized area.</td></tr>
<tr><td>8.</td><td>Resistance to Soldering Heat</td><td>* Solder temperature: 260±5℃
* Dipping time: 10±1 sec
* Preheating: 120 to 150℃ for 1 minute before immerse the capacitor in a eutectic solder.
* Before initial measurement : Perform 150+0/-10℃ for 1 hr and then set for 48±4 hrs at room temp.
* Measurement to be made after keeping at room temp. for 24±2hrs (Class I) or 48±4 hrs (Class II)</td><td>* No remarkable damage.
* Cap change:
NP0: within ±2.5% or ±0.25pF whichever is larger.
* Q/D.F., I.R. and dielectric strength: To meet initial requirements.
X7R: within ±15%
* 25% max. leaching on each edge.</td></tr>
<tr><td>9.</td><td>Temperature Cycle</td><td>* Conduct the five cycles according to the temperatures and time.
<table>
<tr><th>Step</th><th>Temp. (℃)</th><th>Time (min.)</th></tr>
<tr><td>1</td><td>Min. operating temp. +0/-3</td><td>30±3</td></tr>
<tr><td>2</td><td>Room temp.</td><td>2~3</td></tr>
<tr><td>3</td><td>Max. operating temp. +3/-0</td><td>30±3</td></tr>
<tr><td>4</td><td>Room temp.</td><td>2~3</td></tr>
</table>
* Before initial measurement : Perform 150+0/-10℃ for 1 hr and then set for 48±4 hrs at room temp.
* Measurement to be made after keeping at room temp. for 24±2 hrs. (Class I) or 48±4 hrs (Class II)</td><td>* No remarkable damage.
* Cap change：
NP0: within ±2.5% or ±0.25pF whichever is larger.
X7R: within ±15%
* Q/D.F.:
X7R: ≤1.5 × Initial requirement
* I.R.≥ 0.25 × initial requirements.</td></tr>
<tr><td>10.</td><td>Humidity (Damp Heat) Steady State</td><td>* Test temp.: 40±2℃
* Humidity: 90~95% RH
* Test time: 500+24/-0hrs.
* Measurement to be made after keeping at room temp. for 24±2 hrs. (Class I) or 48±4 hrs (Class II)</td><td>* No remarkable damage.
* Cap change:
NP0: within ±5.0% or ±0.5pF whichever is larger.
X7R :within ±15%
Q/D.F Value:
NP0: Cap≥30pF, Q≥350; 10pF≤Cap<30pF, Q≥275+2.5C
Cap<10pF; Q≥200+10C
X7R: ≤7.0%
* I.R.: ≥1GΩ or RxC≥50Ω-F whichever is smaller.</td></tr>
</table>

<table>
<tr><th>No.</th><th>Item</th><th>Test Condition</th><th>Requirements</th></tr>
<tr><td>11.</td><td>Humidity (Damp Heat) Load</td><td>* Test temp.: 40±2℃
* Humidity: 90~95%RH
* Test time: 500+24/-0 hrs.
* To apply voltage：rated voltage (Max. 500V)
* Measurement to be made after keeping at room temp. for 24±2 hrs. (Class I).</td><td>* No remarkable damage.
* Cap change: NP0: within ±7.5% or ±0.75pF whichever is larger.
* Q/D.F. value:
NP0: Cap≥30pF, Q≥200; Cap<30pF, Q≥100+10/3C
* I.R.: ≥500MΩ or RxC≥25Ω-F whichever is smaller.</td></tr>
<tr><td>12.</td><td>Vibration Resistance</td><td>* Vibration frequency: 10~55 Hz/min.
* Total amplitude: 1.5mm
* Test time: 6 hrs. (Two hrs each in three mutually perpendicular directions.)</td><td>* No remarkable damage.
* Cap change and Q/D.F.: To meet initial spec.</td></tr>
<tr><td>13.</td><td>High Temperature Load (Endurance)</td><td>* Test temp.:
125±3℃
* To apply voltage:
(1) U_R≤ 250V: 200% of rated voltage.
Exception item: To apply 150% of rated voltage
<table>
<tr><th>UR</th><th>Size</th><th>Cap. Range</th></tr>
<tr><td>100V</td><td>1206
1210</td><td>> 224</td></tr>
<tr><td>200V / 250V</td><td>1210</td><td>> 224</td></tr>
<tr><td></td><td>1812</td><td>> 474</td></tr>
<tr><td></td><td>1825</td><td>> 105</td></tr>
<tr><td></td><td>2220</td><td>> 105</td></tr>
<tr><td></td><td>2225</td><td>> 105</td></tr>
</table>
(2) 250 < U_R ≤500V: 150% of rated voltage.
(3) U_R > 500V: 120% of rated voltage.
* Test time: 1000+24/-0 hrs.
* Measurement to be made after keeping at room temp. for 24±2 hrs. (Class I) or 48±4 hrs (Class II)</td><td>* No remarkable damage.
* Cap change:
NP0: within ±3.0% or ±0.3pF whichever is larger.
X7R :within ±15%
* Q/D.F Value:
NP0: Cap≥30pF, Q≥350
10pF≤Cap<30pF, Q≥275+2.5C
Cap<10pF, Q≥200+10C
X7R: ≤7.0%
* I.R.: ≥1GΩ or RxC≥50Ω-F whichever is smaller.</td></tr>
<tr><td>14.</td><td>Resistance to Flexure of Substrate</td><td>* The middle part of substrate shall be pressurized by means of the pressurizing rod at a rate of about 1mm per second until the deflection becomes 5mm.
 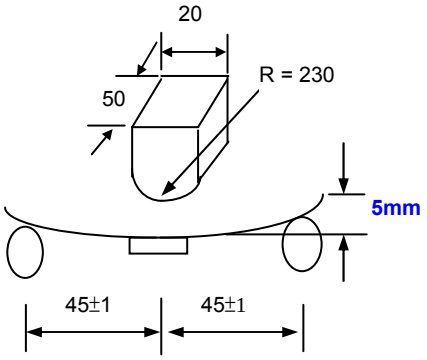
</td><td>* No remarkable damage.
* Cap change:
X7R: within ±10%
(This capacitance change means the change of capacitance under specified flexure of substrate from the capacitance measured before the test.)</td></tr>
<tr><td>15.</td><td>Adhesive Strength of Termination</td><td>* Capacitors mounted on a substrate. A force of 10N applied perpendicular to the place of substrate and parallel the line joining the center of terminations for 10±1 second.
 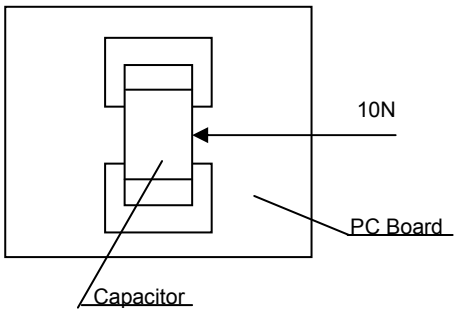
</td><td>* No remarkable damage or removal of the terminations.</td></tr>
</table>