TLV6003 980-nA, 16-V, Precision, Rail-to-Rail Input and Output, Operational Amplifier

1 Features

- Micro-power operation: 1.2 µA (maximum)
- Low input offset voltage: 550 µV (maximum)
- Reverse battery protection up to 18 V
- Rail-to-rail input/output
- Gain bandwidth product: 5.5 kHz
- Specified temperature range: T_A = –40°C to +125°C
- Operating temperature range: T_A = –55°C to +125°C
- Input common-mode range exceeds the rails: –0.1 V to V_{CC} + 5 V
- Supply voltage range: 2.5 V to 16 V
- Small package:
  - 5-pin SOT-23

2 Applications

- Flow transmitter
- Pressure transmitter
- Motion detector (PIR, uWave, and more)
- Blood glucose monitor
- Gas detector

3 Description

The TLV6003 is a nanopower operational amplifier consuming only 980 nA per channel, while offering very low maximum offset. Reverse battery protection guards the amplifier from an overcurrent condition due to improper battery installation. For harsh environments, the inputs can be taken 5 V greater than the positive supply rail without damage to the device.

The low supply current is coupled with a low input bias current, enabling the device to be used with high series resistance input sources, such as PIR motion detectors and carbon monoxide sensors. DC accuracy is maintained with a low max offset voltage of 550 µV (25°C), a typical CMRR of 120 dB, and a minimum open-loop gain of 112 dB at 2.7 V.

The maximum operating supply voltage is specified from 2.5 V to 16 V, with electrical characteristics specified at 2.7 V, 5 V, and 15 V. The 2.5-V operation makes this device compatible with Li-Ion battery-powered systems, making the TLV6003 a good choice for input signal gain and buffering into low-power microcontrollers, such as TI's MSP430.

The TLV6003 is available in a small SOT-23 package.

Device Information(1)

PART NUMBER	PACKAGE	BODY SIZE (NOM)
TLV6003	SOT-23 (5)	2.90 mm x 1.60 mm

(1) For all available packages, see the package option addendum at the end of the data sheet.

PIR Motion Detector Buffer

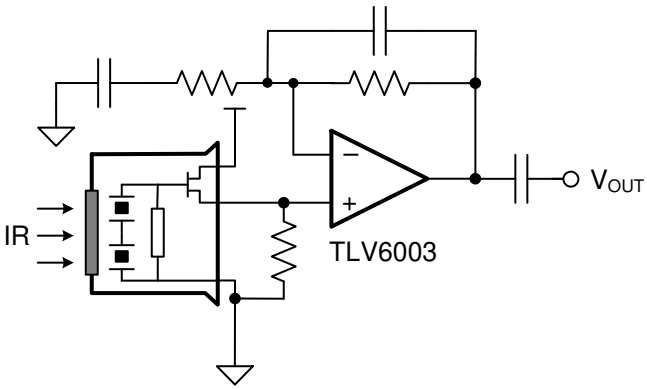

Offset Voltage vs Temperature

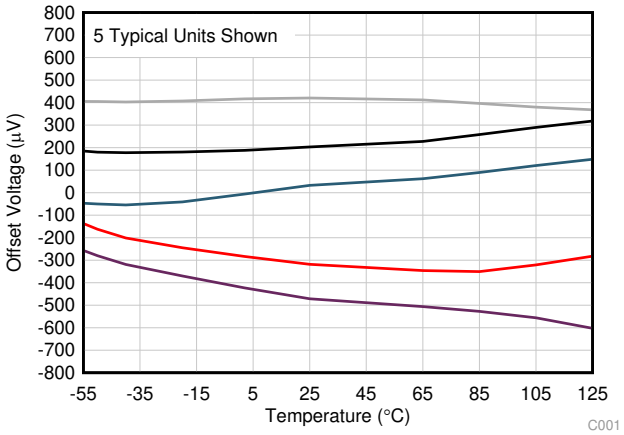

An IMPORTANT NOTICE at the end of this data sheet addresses availability, warranty, changes, use in safety-critical applications, intellectual property matters and other important disclaimers. PRODUCTION DATA.

Table of Contents

1 **Features** ... 1
2 **Applications** ... 1
3 **Description** ... 1
4 **Revision History** ... 2
5 **Pin Configuration and Functions** ... 3
6 **Specifications** ... 4
6.1 Absolute Maximum Ratings ... 4
6.2 ESD Ratings ... 4
6.3 Recommended Operating Conditions ... 4
6.4 Thermal Information – TLV6003 ... 4
6.5 Electrical Characteristics ... 5
6.6 Typical Characteristics ... 7
7 **Detailed Description** ... 12
7.1 Overview ... 12
7.2 Functional Block Diagram ... 12
7.3 Feature Description ... 13
7.4 Device Functional Modes ... 13
8 **Application and Implementation** ... 14
8.1 Application Information ... 14
8.2 Typical Application ... 15
9 **Power Supply Recommendations** ... 18
10 **Layout** ... 18
10.1 Layout Guidelines ... 18
10.2 Layout Example ... 18
11 **Device and Documentation Support** ... 19
11.1 Device Support ... 19
11.2 Documentation Support ... 19
11.3 Receiving Notification of Documentation Updates 19
11.4 Community Resources ... 19
11.5 Trademarks ... 19
11.6 Electrostatic Discharge Caution ... 19
11.7 Glossary ... 19
12 **Mechanical, Packaging, and Orderable Information** ... 19

4 Revision History

DATE	REVISION	NOTES
October 2019	*	Initial release.

Copyright © 2019, Texas Instruments Incorporated

5 Pin Configuration and Functions

DBV Package
5-pin SOT-23
Top View

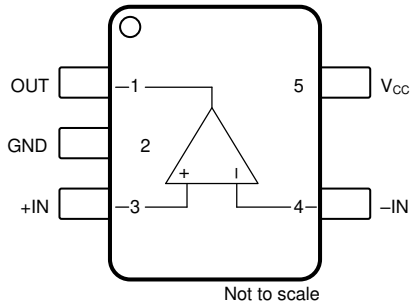

Pin Functions

PIN		I/O	DESCRIPTION
NAME	DBV		
OUT	1	O	Output
GND	2	–	Negative (lowest) power supply
+IN	3	I	Noninverting input
–IN	4	I	Inverting input
VCC	5	–	Positive (highest) power supply

6 Specifications

6.1 Absolute Maximum Ratings

over operating free-air temperature range (unless otherwise noted)[1]

			MIN	MAX	UNIT
V_{CC}	Supply voltage[2]		–18	17	V
V_{IN+}, V_{IN-}	Input voltage	Singe-ended and common-mode input voltage, V_{ICR}	–0.3	V_{CC} + 5	V
		Differential, V_{ID}		±20	
	Input current (any input)			±10	mA
I_O	Output current			±10	mA
	Continuous total power dissipation		See *Dissipation Rating*		
T_J	Maximum junction temperature		–55	150	°C
T_{stg}	Storage temperature		–65	150	°C

(1) Stresses beyond those listed under *Absolute Maximum Ratings* may cause permanent damage to the device. These are stress ratings only, which do not imply functional operation of the device at these or any other conditions beyond those indicated under *Recommended Operating Conditions*. Exposure to absolute-maximum-rated conditions for extended periods may affect device reliability.
(2) All voltage values, except differential voltages, are with respect to GND

6.2 ESD Ratings

			VALUE	UNIT
$V_{(ESD)}$	Electrostatic discharge	Human-body model (HBM), per ANSI/ESDA/JEDEC JS-001[1]	±450	V
		Charged-device model (CDM), per JEDEC specification JESD22-C101[2]	±1000	

(1) JEDEC document JEP155 states that 500-V HBM allows safe manufacturing with a standard ESD control process.
(2) JEDEC document JEP157 states that 250-V CDM allows safe manufacturing with a standard ESD control process.

6.3 Recommended Operating Conditions

over operating free-air temperature range (unless otherwise noted)

			MIN	NOM	MAX	UNIT
V_{CC}	Supply Voltage	Single Supply	2.5		16	V
		Split Supply	±1.25		±8	
T_A	Operating free-air temperature		–55		125	°C

6.4 Thermal Information – TLV6003

THERMAL METRIC[1]		TLV6003 DBV 5 PINS	UNIT
$R_{\theta JA}$	Junction-to-ambient thermal resistance	166.0	°C/W
$R_{\theta JC(top)}$	Junction-to-case (top) thermal resistance	89.9	°C/W
$R_{\theta JB}$	Junction-to-board thermal resistance	36.5	°C/W
ψ_{JT}	Junction-to-top characterization parameter	14.0	°C/W
ψ_{JB}	Junction-to-board characterization parameter	36.3	°C/W
$R_{\theta JC(bot)}$	Junction-to-case (bottom) thermal resistance	N/A	°C/W

(1) For more information about traditional and new thermal metrics, see the *Semiconductor and IC Package Thermal Metrics* application report.

Copyright © 2019, Texas Instruments Incorporated

6.5 Electrical Characteristics

at T_A = 25°C, V_{CC} = 2.7 V, 5 V, and 15 V, V_{ICR} = V_O = V_{CC}/2 (unless otherwise noted)

PARAMETER		TEST CONDITIONS		MIN	TYP	MAX	UNIT
DC PERFORMANCE							
V_{IO}	Input offset voltage(1)				390	±550	µV
		T_A = –55°C to +125°C				1500	
dV_{IO}/dT	Offset voltage drift	T_A = –55°C to +125°C			2		µV/°C
CMRR	Common-mode rejection ratio	V_{ICR} = 0 V to V_{CC}	V_{CC} = 2.7 V	63	120		dB
			V_{CC} = 2.7 V, T_A = –40°C to +125°C	60			
			V_{CC} = 5 V	66	120		
			V_{CC} = 5 V, T_A = –40°C to +125°C	63			
			V_{CC} = 15 V	76	120		
			V_{CC} = 15 V, T_A = –40°C to +125°C	75			
A_{OL}	Open-loop gain	V_{CC} = 2.7 V, 0.2 V < V_O < V_{CC} – 0.2 V, R_L = 500 kΩ			112		dB
		V_{CC} = 15 V, 0.2 V < V_O < V_{CC} – 0.2 V, R_L = 500 kΩ			123		dB
INPUT							
I_{IO}	Input offset current				25	250	pA
		T_A = –40°C to +125°C				1200	
I_{IB}	Input bias current				100	250	pA
		T_A = –40°C to +125°C				2000	
$r_{i(d)}$	Differential input resistance				300		MΩ
$C_{i(c)}$	Common-mode input capacitance	f = 100 kHz			3		pF
DYNAMIC PERFORMANCE							
UGBW	Unity gain bandwidth	R_L = 500 kΩ, C_L = 100 pF			5.5		kHz
SR	Slew rate at unity gain	$V_{O(pp)}$ = 0.8 V, R_L = 500 kΩ, C_L = 100 pF			2.5		V/ms
PM	Phase margin	R_L = 500 kΩ, C_L = 100 pF			60		°
	Gain margin	R_L = 500 kΩ, C_L = 100 pF			15		dB
t_s	Settling time	V_{CC} = 2.7 or 5 V, $V_{(STEP)PP}$ = 1 V, A_V = –1, C_L = 100 pF, R_L = 100 kΩ	0.1%		1.84		ms
		V_{CC} = 15 V, $V_{(STEP)PP}$ = 1 V, A_V = –1, C_L = 100 pF, R_L = 100 kΩ	0.1%		6.1		
			0.01%		32		
NOISE PERFORMANCE							
V_n	Equivalent input noise voltage	f = 10 Hz			800		nV/√Hz
		f = 100 Hz			500		
I_n	Equivalent input noise current	f = 100 Hz			8		fA/√Hz
OUTPUT							
V_{OL}	Voltage output swing from the positive rail	I_{OL} = 2 µA (sourcing)		V_{CC} – 0.05	V_{CC} – 0.02		V
			T_A = –40°C to +125°C	V_{CC} – 0.07			
		I_{OL} = 50 µA (sourcing)		V_{CC} – 0.08	V_{CC} – 0.05		
			T_A = –40°C to +125°C	V_{CC} – 0.1			
V_{OH}	Voltage output swing from the negative rail	I_{OH} = 2 µA (sinking)			0.090	0.150	
			T_A = –40°C to +125°C			0.180	
		I_{OH} = 50 µA (sinking)			0.180	0.230	
			T_A = –40°C to +125°C			0.260	
I_O	Output current	V_O = 0.5 V from rail			±200		µA

(1) Input offset voltage and offset voltage drift are specified by characterization from T_A = –55°C to +125°C. All other temperature specifications cover the range of T_A = –40°C to +125°C, as listed in the test conditions column.

Electrical Characteristics (continued)

at T_A = 25°C, V_{CC} = 2.7 V, 5 V, and 15 V, V_{ICR} = V_O = V_{CC}/2 (unless otherwise noted)

PARAMETER		TEST CONDITIONS		MIN	TYP	MAX	UNIT
POWER SUPPLY							
I_{CC}	Supply current	V_{CC} = 2.7 V and 5 V			980	1200	nA
			T_A = –40°C to +125°C			1350	
		V_{CC} = 15 V			1000	1250	
			T_A = –40°C to +125°C			1400	
	Reverse supply current	V_{CC} = –18 V, V_{IN} = 0 V, V_O = open current			50		nA
PSRR	Power supply rejection ratio ($\Delta V_{CC}/\Delta V_{OS}$)	V_{CC} = 2.7 to 5 V, no load		90	100		dB
			T_A = –40°C to 125°C	85			
		V_{CC} = 5 to 15 V, no load		100	110		
			T_A = –40°C to 125°C	95			

Copyright © 2019, Texas Instruments Incorporated

6.6 Typical Characteristics

at T_A = 25°C and V_{CC} = 5 V (unless otherwise noted)

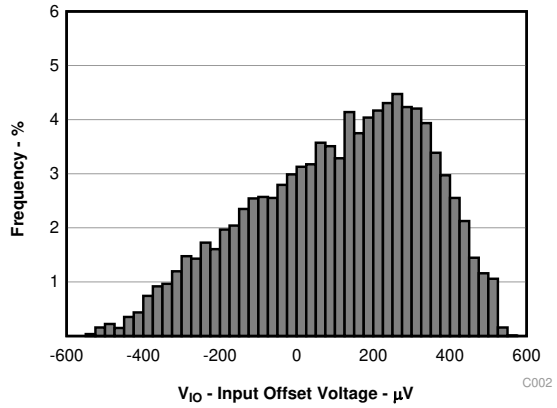

Figure 1. Input Offset Voltage Histogram

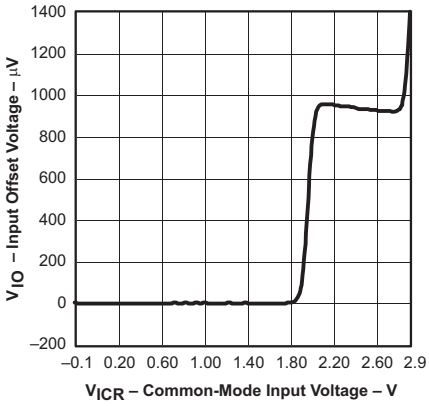

V_{CC} = 2.7 V

Figure 2. Input Offset Voltage vs Common-Mode Input Voltage

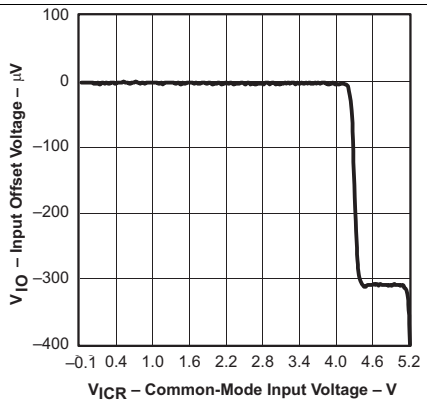

V_{CC} = 5 V

Figure 3. Input Offset Voltage vs Common-Mode Input Voltage

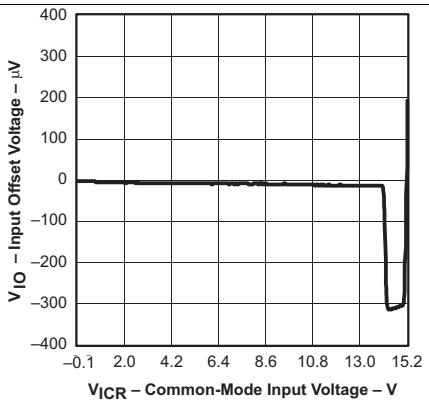

V_{CC} = 15 V

Figure 4. Input Offset Voltage vs Common-Mode Input Voltage

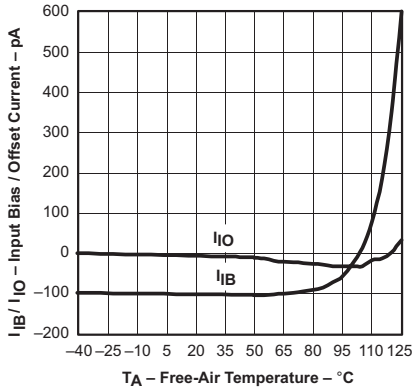

V_{CC} = 2.7 V

Figure 5. Input Bias Current and Offset Current vs Free-Air Temperature

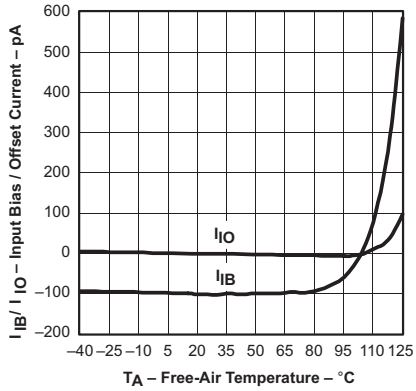

V_{CC} = 5.0 V

Figure 6. Input Bias Current and Offset Current vs Common-Mode Input Voltage

Typical Characteristics (continued)

at T_A = 25°C and V_{CC} = 5 V (unless otherwise noted)

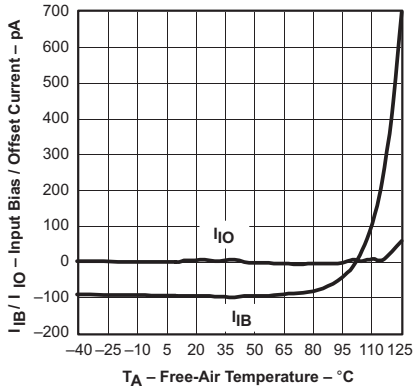

V_{CC} = 15 V

Figure 7. Input Bias Current and Offset Current vs Free-Air Temperature

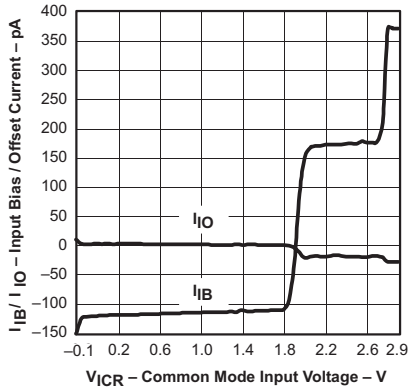

V_{CC} = 2.7 V

Figure 8. Input Bias Current and Offset Current vs Common-Mode Input Voltage

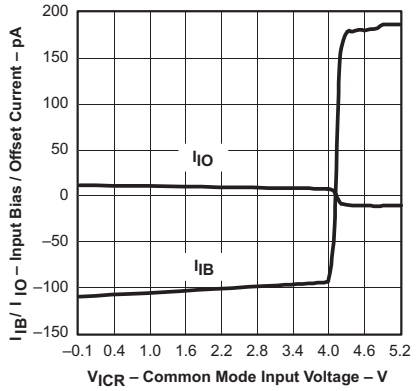

V_{CC} = 5.0 V

Figure 9. Input Bias Current and Offset Current vs Common-Mode Input Voltage

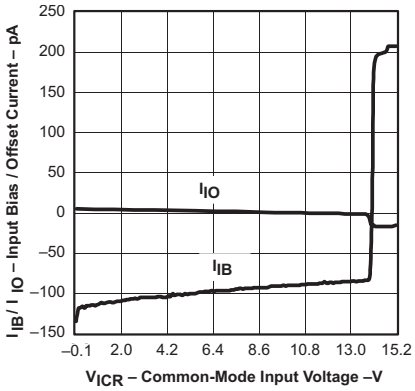

V_{CC} = 15.0 V

Figure 10. Input Bias Current and Offset Current vs Common-Mode Input Voltage

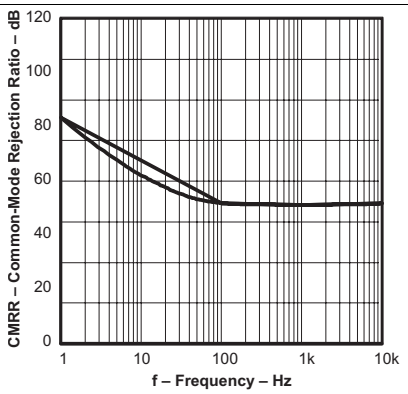

Figure 11. Common-Mode Rejection Ratio vs Frequency

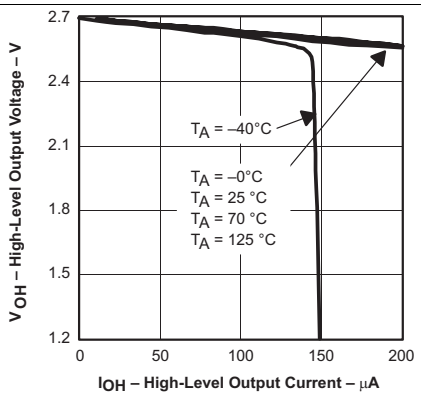

Figure 12. High-Level Output Voltage vs High-Level Output Current

Copyright © 2019, Texas Instruments Incorporated

Typical Characteristics (continued)

at T_A = 25°C and V_{CC} = 5 V (unless otherwise noted)

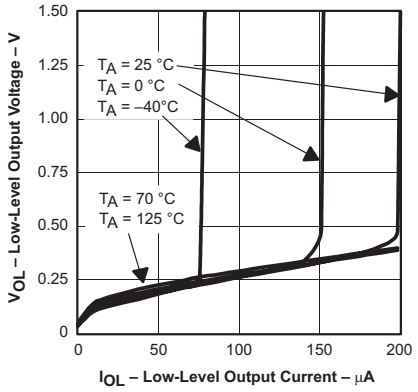

Figure 13. Low-Level Output Voltage vs Low-Level Output Current

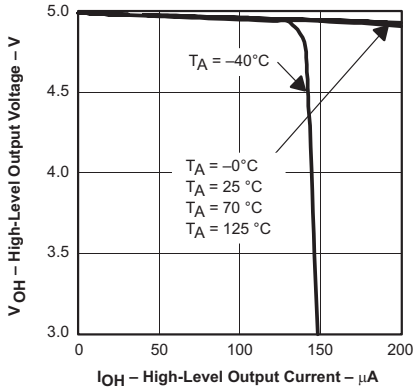

Figure 14. High-Level Output Voltage vs High-Level Output Current

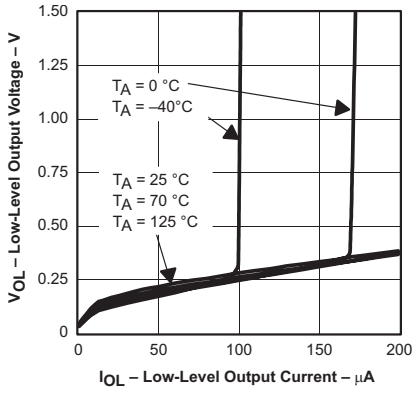

Figure 15. Low-Level Output Voltage vs Low-Level Output Current

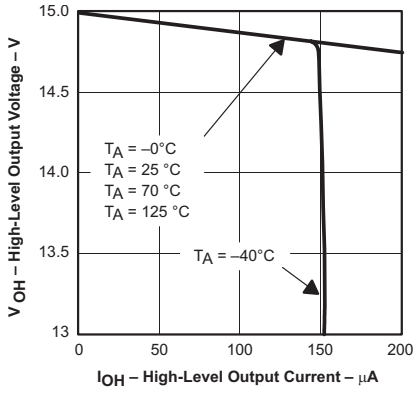

Figure 16. High-Level Output Voltage vs High-Level Output Current

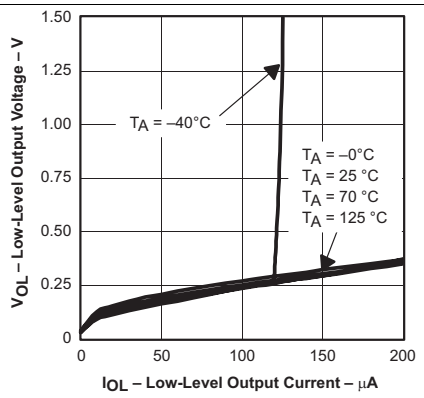

Figure 17. Low-Level Output Voltage vs Low-Level Output Current

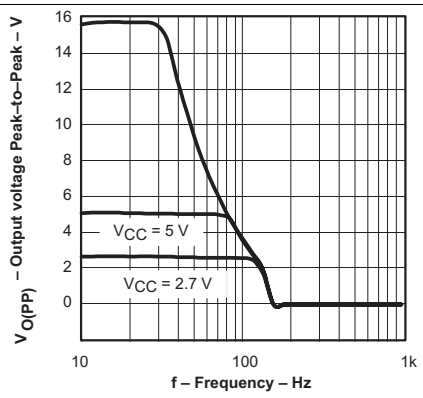

Figure 18. Output Voltage Peak-to-Peak vs Frequency

Typical Characteristics (continued)

at T_A = 25°C and V_{CC} = 5 V (unless otherwise noted)

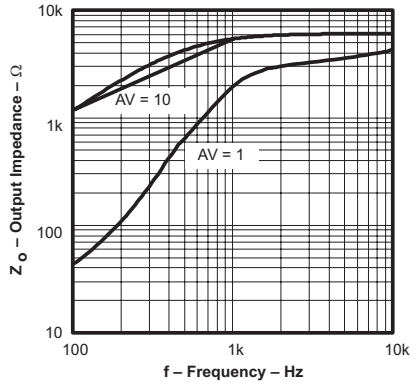

Figure 19. Output Impedance vs Frequency

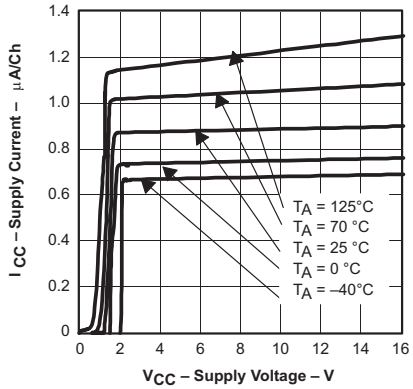

Figure 20. Supply Current vs Supply Voltage

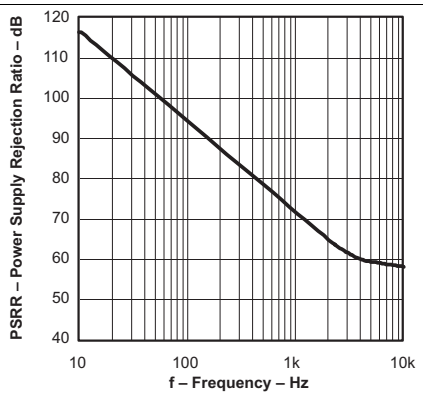

Figure 21. Power Supply Rejection Ratio vs Frequency

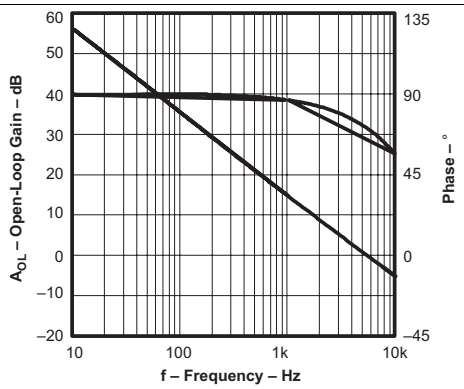

Figure 22. Open-Loop Gain and Phase vs Frequency

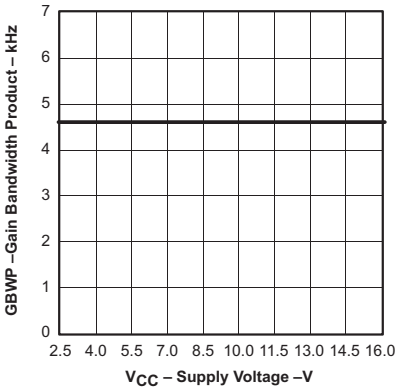

Figure 23. Gain Bandwidth Product vs Supply Voltage

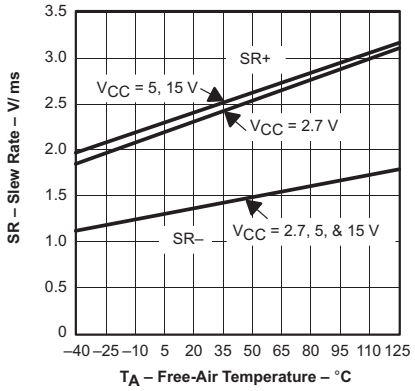

Figure 24. Slew Rate vs Free-Air Temperature

Copyright © 2019, Texas Instruments Incorporated

Typical Characteristics (continued)

at T_A = 25°C and V_{CC} = 5 V (unless otherwise noted)

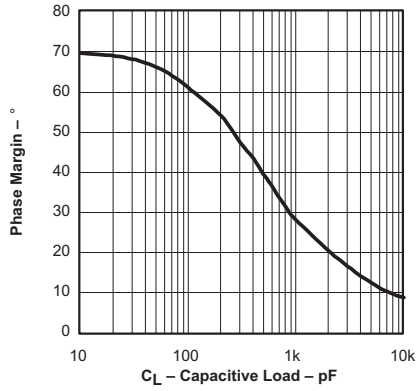

Figure 25. Phase Margin vs Capacitive Load

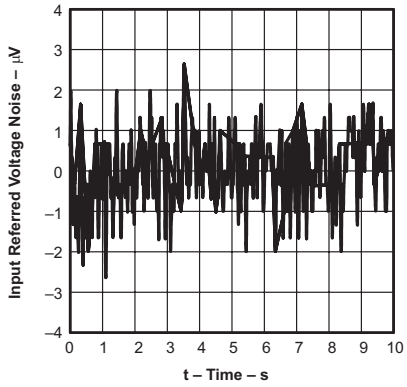

Figure 26. Voltage Noise Over a 10-Second Period

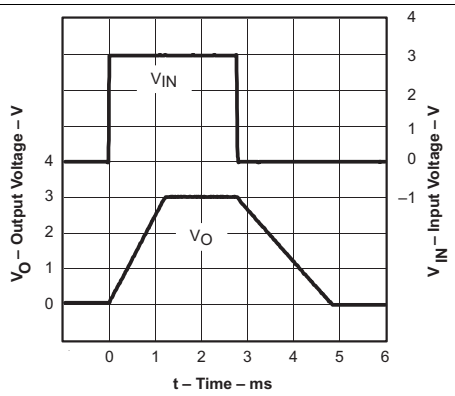

A_V = 1

Figure 27. Large-Signal Step Response

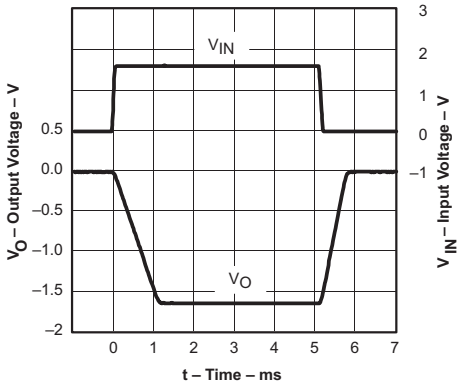

A_V = –1

Figure 28. Large-Signal Step Response

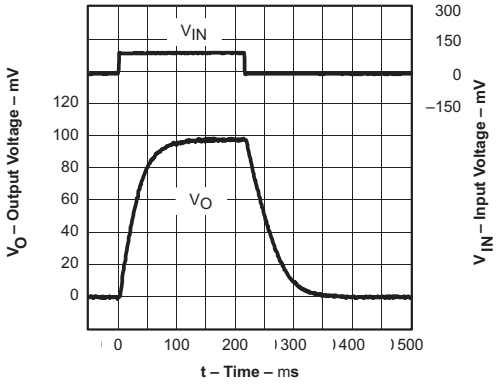

A_V = 1

Figure 29. Small-Signal Step Response

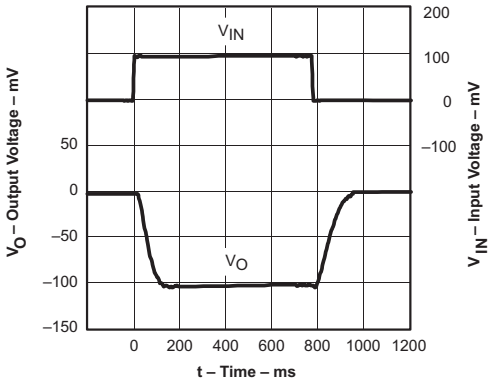

A_V = –1

Figure 30. Small-Signal Step Response

7 Detailed Description

7.1 Overview

The TLV6003 is a nanopower operational amplifier consuming only 980 nA per channel, while offering very low maximum offset. Reverse battery protection guards the amplifier from overcurrent conditions due to improper battery installation. The TLV6003 is based on a rail-to-rail bipolar technology that is specifically designed to allow high common-mode-range functionality. For harsh environments, the inputs can be taken 5 V greater than the positive supply rail without damage to the device. Offset is specified by characterization to an ambient temperature of –55°C, making the TLV6003 a good choice for low-temperature industrial automation.

7.2 Functional Block Diagram

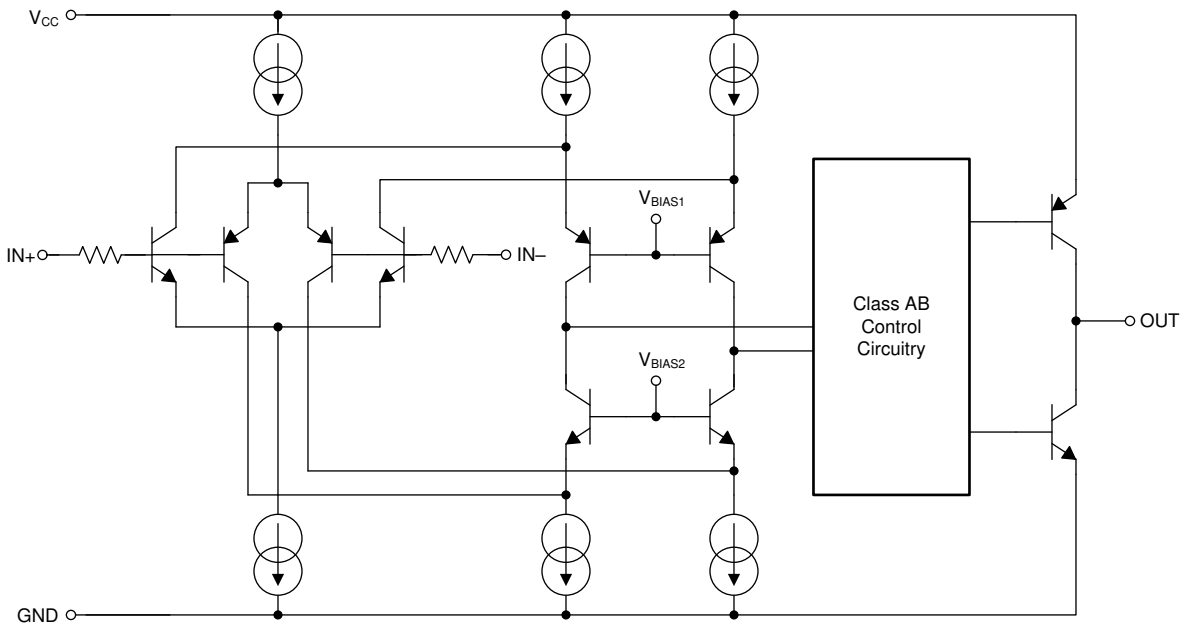

Copyright © 2019, Texas Instruments Incorporated

7.3 Feature Description

7.3.1 Reverse-Battery Protection

The TLV6003 is protected against reverse-battery voltage up to 18 V. When subjected to reverse-battery conditions, the supply current is typically 50 nA at 25°C (inputs grounded and outputs open). This current is determined by the leakage of internal Schottky diodes, and therefore increases as the ambient temperature increases.

When subjected to reverse-battery conditions, and negative voltages are applied to the inputs or outputs, the input ESD structure conducts current; limit this current to less than 10 mA. If the inputs or outputs are referred to ground rather than midrail, no extra precautions are required.

7.3.2 Common-Mode Input Range

The TLV6003 has rail-to-rail inputs and outputs. For common-mode inputs from –0.1 V to V_{CC} – 0.8 V, a PNP differential pair provides the gain.

For inputs between V_{CC} – 0.8 V and V_{CC}, two NPN emitter followers buffering a second PNP differential pair provide the gain.

This special combination of a NPN and PNP differential pair enables the inputs to be taken 5 V greater than V_{CC}. As the inputs rise to greater than V_{CC}, the NPNs change from functioning as transistors to functioning as diodes. This change leads to an increase in input bias current. The second PNP differential pair continues to function normally as the inputs exceed V_{CC}.

The TLV6003 has a negative common-mode input voltage range that can fall to less than V_{GND} by 100 mV. If the inputs are taken to less than V_{GND} – 0.1, reduced open-loop gain will be observed.

7.4 Device Functional Modes

The TLV6003 has a single functional mode and is operational when the power-supply voltage is greater than 2.5 V. The maximum specified power-supply voltage for the TLV6003 is 16 V.

Copyright © 2019, Texas Instruments Incorporated

8 Application and Implementation

NOTE

Information in the following applications sections is not part of the TI component specification, and TI does not warrant its accuracy or completeness. TI's customers are responsible for determining suitability of components for their purposes. Customers should validate and test their design implementation to confirm system functionality.

8.1 Application Information

8.1.1 Drive a Capacitive Load

The TLV6003 is internally compensated for stable unity-gain operation, with a 5.5-kHz typical gain bandwidth. However, the unity gain follower is the most sensitive configuration to capacitive load. The combination of a capacitive load placed directly on the output of an amplifier along with the amplifier output impedance creates a phase lag, which reduces the phase margin of the amplifier. If the phase margin is significantly reduced, the response will be underdamped, which causes peaking in the transfer function. This condition creates very low phase margin, and leads to excessive ringing or oscillations.

In order to drive heavy (> 50 pF) capacitive loads, an isolation resistor (R_{ISO}) must be used, as shown in Figure 31. By using this isolation resistor, the capacitive load is isolated from the amplifier output. The higher the value of R_{ISO}, the more stable the amplifier. If the value of R_{ISO} is sufficiently high, the feedback loop is stable, independent of the value of C_L. However, larger values of R_{ISO} result in reduced output swing and reduced output current drive. The recommended value for R_{ISO} is 30 kΩ to 50 kΩ.

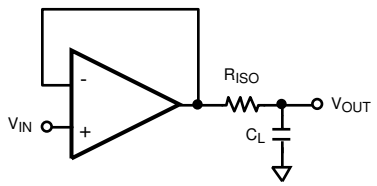

Figure 31. Resistive Isolation of Capacitive Load

Copyright © 2019, Texas Instruments Incorporated

8.2 Typical Application

Figure 32 shows a simple micropower potentiostat circuit for use with three-terminal unbiased CO sensors; although, the design is applicable to many other type of three-terminal gas sensors or electrochemical cells.

The basic sensor has three electrodes: the sense or working electrode (WE), counter electrode (CE) and reference electrode (RE). A current flows between the CE and WE proportional to the detected concentration.

The RE monitors the potential of the internal reference point. For an unbiased sensor, the WE and RE electrodes must be maintained at the same potential by adjusting the bias on CE. Through the potentiostat circuit formed by U1, the servo feedback action maintains the RE pin at a potential set by V_{REF}.

R1 maintains stability due to the large capacitance of the sensor.

C1 and R2 form the potentiostat integrator and set the feedback time constant.

U2 forms a transimpedance amplifier (TIA) to convert the resulting sensor current into a proportional voltage. The transimpedance gain, and resulting sensitivity, is set by R_F according to Equation 1.

$$V_{TIA} = (-I * R_F) + V_{REF} \quad (1)$$

R_L is a load resistor with a value that is normally specified by the sensor manufacturer (typically, 10 Ω). The potential at WE is set by the applied $V_{REF.}$

Riso provides capacitive isolation and, combined with C2, form the output filter and ADC reservoir capacitor to drive the ADC.

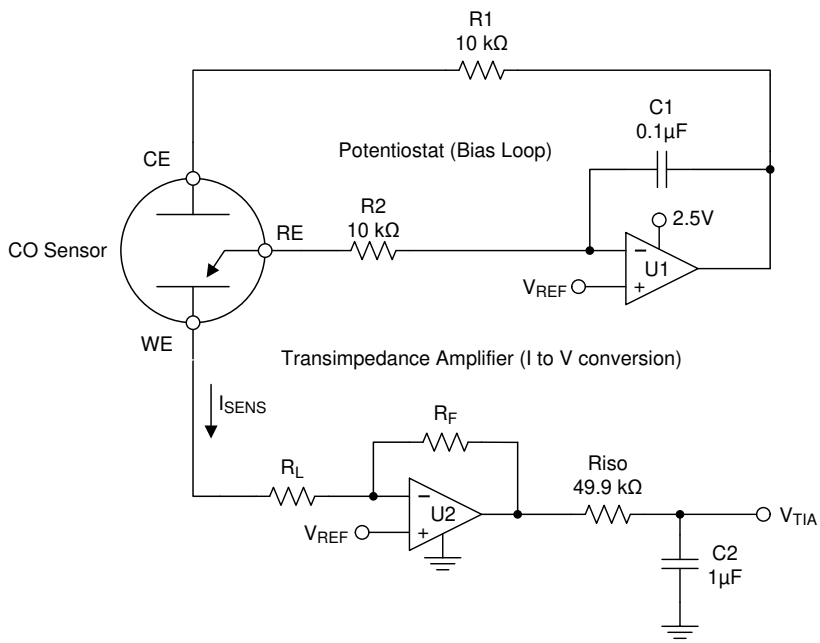

Figure 32. Three Terminal CO Gas Sensor

Typical Application (continued)

8.2.1 Design Requirements

For this example, an electrical model of a CO sensor is used to simulate the sensor performance, as shown in Figure 33. The simulation is designed to model a CO sensor with a sensitivity of 69 nA/ppm. The supply voltage and maximum ADC input voltage is 2.5 V, and the maximum concentration is 300 ppm.

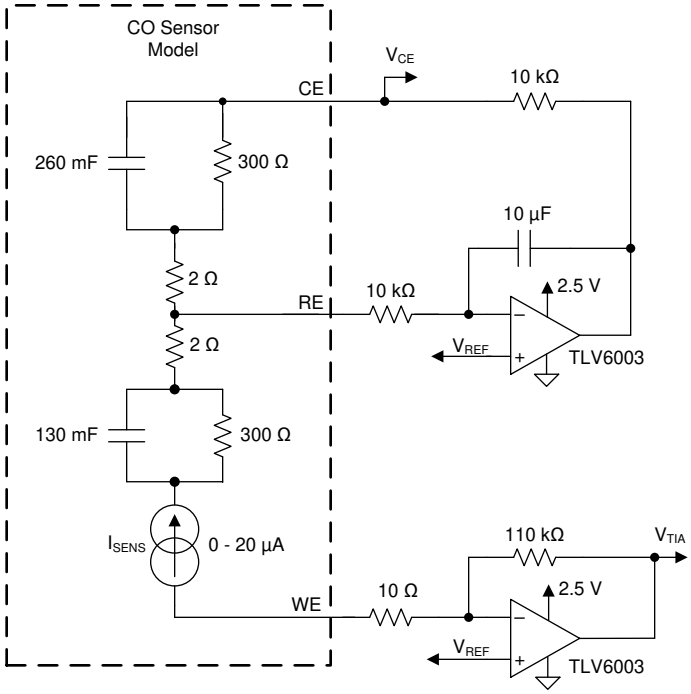

Figure 33. CO Sensor Simulation Schematic

Table 1. Design Parameters

DESIGN PARAMETER	EXAMPLE VALUE
Supply voltage	2.5 V
Amplifier quiescent current	< 2 µA
Transimpedance amplifier sensitivity	110 mV/µA

Copyright © 2019, Texas Instruments Incorporated

8.2.2 Detailed Design Procedure

First, determine the V_{REF} voltage. This voltage is a compromise between maximum headroom and resolution, as well as allowance for the minimum swing on the CE terminal because the CE terminal generally goes negative in relation to the RE potential as the concentration (sensor current) increases. Bench measurements found the difference between CE and RE to be 180 mV at 300 ppm for this particular sensor.

To allow for negative CE swing, *footroom*, and voltage drop across the 10-kΩ resistor, 300 mV is chosen for V_{REF}.

Therefore, 300 mV is used as the minimum V_{ZERO} to add some headroom.

$V_{ZERO} = V_{REF} = 300$ mV

where

- V_{ZERO} is the zero concentration voltage.
- V_{REF} is the reference voltage (300 mV). (2)

Next, calculate the maximum sensor current at highest expected concentration:

$I_{SENSMAX} = I_{PERPPM} * ppmMAX = 69\ nA * 300\ ppm = 20.7\ \mu A$

where

- $I_{SENSMAX}$ is the maximum expected sensor current.
- I_{PERPPM} is the manufacturer specified sensor current in Amps per ppm.
- ppmMAX is the maximum required ppm reading. (3)

Then, find the available output swing range greater than the reference voltage available for the measurement:

$V_{SWING} = V_{OUTMAX} – V_{ZERO} = 2.5\ V – 0.3\ V = 2.2\ V$

where

- V_{SWING} is the expected change in output voltage
- V_{OUTMAX} is the maximum amplifer output swing (usually near V_{CC}) (4)

Finally, calculate the transimpedance resistor (R_F) value using the maximum swing and the maximum sensor current:

$R_F = V_{SWING} / I_{SENSMAX} = 2.2\ V / 20.7\ \mu A = 106.28\ k\Omega$ (use 110 kΩ for a common value) (5)

8.2.3 Application Curve

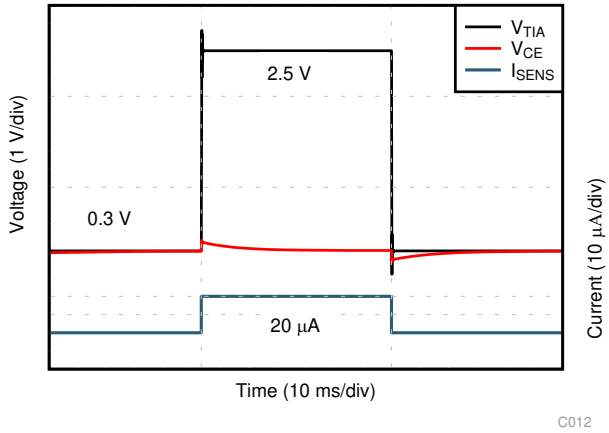

Figure 34. Sensor Transient Response to Simulated 300-ppm CO Exposure

9 Power Supply Recommendations

The TLV6003 is specified for operation from 2.5 V to 16 V (±1.25 V to ±8 V) over a –40°C to +125°C temperature range.

CAUTION

Supply voltages larger than 17 V can permanently damage the device.

For proper operation, the power supplies must be properly decoupled. For decoupling the supply lines, place 100 nF capacitors as close as possible to the operational amplifier power supply pins. For single-supply operation, place a capacitor between V_{CC} and GND supply leads. For dual supplies, place one capacitor between V_{CC} and ground, and one capacitor between GND and ground.

Low-bandwidth nanopower devices do not have good high-frequency (> 1 kHz) AC PSRR rejection against high-frequency switching supplies and other 1-kHz and greater noise sources. Therefore, use extra supply filtering if kilohertz or greater noise is expected on the power supply lines.

10 Layout

10.1 Layout Guidelines

- Bypass the V_{CC} pin to ground with a low ESR capacitor.
- The best placement is closest to the V_{CC} and ground pins.
- Take care to minimize the loop area formed by the bypass capacitor connection between V_{CC} and ground.
- Connect the ground pin to the PCB ground plane at the pin of the device.
- Place the feedback components as close as possible to the device to minimize strays.

10.2 Layout Example

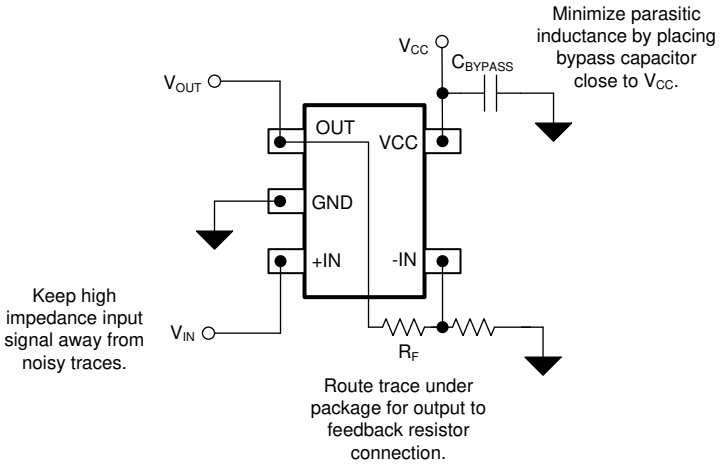

Figure 35. SOT-23 Layout Example (Top View)

Copyright © 2019, Texas Instruments Incorporated

11 Device and Documentation Support

11.1 Device Support

11.1.1 Development Support

- TINA-TI SPICE-Based Analog Simulation Program
- DIP Adapter Evaluation Module
- TI Universal Operational Amplifier Evaluation Module
- TI Filter Design Tool

11.2 Documentation Support

11.2.1 Related Documentation

For related documentation see the following:

- *Single-supply, low-side, unidirectional current-sensing circuit* application report
- *Simplifying Environmental Measurements in Power Conscious Factory and Building Automation Systems With Nanopower Op Amps* application note
- *GPIO Pins Power Signal Chain in Personal Electronics Running on Li-Ion Batteries* application brief

11.3 Receiving Notification of Documentation Updates

To receive notification of documentation updates, navigate to the device product folder on ti.com. In the upper right corner, click on *Alert me* to register and receive a weekly digest of any product information that has changed. For change details, review the revision history included in any revised document.

11.4 Community Resources

TI E2E™ support forums are an engineer's go-to source for fast, verified answers and design help — straight from the experts. Search existing answers or ask your own question to get the quick design help you need.

Linked content is provided "AS IS" by the respective contributors. They do not constitute TI specifications and do not necessarily reflect TI's views; see TI's Terms of Use.

11.5 Trademarks

E2E is a trademark of Texas Instruments.
All other trademarks are the property of their respective owners.

11.6 Electrostatic Discharge Caution

This integrated circuit can be damaged by ESD. Texas Instruments recommends that all integrated circuits be handled with appropriate precautions. Failure to observe proper handling and installation procedures can cause damage.

ESD damage can range from subtle performance degradation to complete device failure. Precision integrated circuits may be more susceptible to damage because very small parametric changes could cause the device not to meet its published specifications.

11.7 Glossary

SLYZ022 — *TI Glossary*.

This glossary lists and explains terms, acronyms, and definitions.

12 Mechanical, Packaging, and Orderable Information

The following pages include mechanical, packaging, and orderable information. This information is the most current data available for the designated devices. This data is subject to change without notice and revision of this document. For browser-based versions of this data sheet, refer to the left-hand navigation.

PACKAGING INFORMATION

Orderable Device	Status (1)	Package Type	Package Drawing	Pins	Package Qty	Eco Plan (2)	Lead/Ball Finish (6)	MSL Peak Temp (3)	Op Temp (°C)	Device Marking (4/5)	Samples
TLV6003DBVR	ACTIVE	SOT-23	DBV	5	3000	Green (RoHS & no Sb/Br)	CU NIPDAU	Level-1-260C-UNLIM	-40 to 125	1NE9	Samples

(1) The marketing status values are defined as follows:
ACTIVE: Product device recommended for new designs.
LIFEBUY: TI has announced that the device will be discontinued, and a lifetime-buy period is in effect.
NRND: Not recommended for new designs. Device is in production to support existing customers, but TI does not recommend using this part in a new design.
PREVIEW: Device has been announced but is not in production. Samples may or may not be available.
OBSOLETE: TI has discontinued the production of the device.

(2) **RoHS:** TI defines "RoHS" to mean semiconductor products that are compliant with the current EU RoHS requirements for all 10 RoHS substances, including the requirement that RoHS substance do not exceed 0.1% by weight in homogeneous materials. Where designed to be soldered at high temperatures, "RoHS" products are suitable for use in specified lead-free processes. TI may reference these types of products as "Pb-Free".
RoHS Exempt: TI defines "RoHS Exempt" to mean products that contain lead but are compliant with EU RoHS pursuant to a specific EU RoHS exemption.
Green: TI defines "Green" to mean the content of Chlorine (Cl) and Bromine (Br) based flame retardants meet JS709B low halogen requirements of <=1000ppm threshold. Antimony trioxide based flame retardants must also meet the <=1000ppm threshold requirement.

(3) MSL, Peak Temp. - The Moisture Sensitivity Level rating according to the JEDEC industry standard classifications, and peak solder temperature.

(4) There may be additional marking, which relates to the logo, the lot trace code information, or the environmental category on the device.

(5) Multiple Device Markings will be inside parentheses. Only one Device Marking contained in parentheses and separated by a "~" will appear on a device. If a line is indented then it is a continuation of the previous line and the two combined represent the entire Device Marking for that device.

(6) Lead/Ball Finish - Orderable Devices may have multiple material finish options. Finish options are separated by a vertical ruled line. Lead/Ball Finish values may wrap to two lines if the finish value exceeds the maximum column width.

Important Information and Disclaimer: The information provided on this page represents TI's knowledge and belief as of the date that it is provided. TI bases its knowledge and belief on information provided by third parties, and makes no representation or warranty as to the accuracy of such information. Efforts are underway to better integrate information from third parties. TI has taken and continues to take reasonable steps to provide representative and accurate information but may not have conducted destructive testing or chemical analysis on incoming materials and chemicals. TI and TI suppliers consider certain information to be proprietary, and thus CAS numbers and other limited information may not be available for release.

In no event shall TI's liability arising out of such information exceed the total purchase price of the TI part(s) at issue in this document sold by TI to Customer on an annual basis.

TAPE AND REEL INFORMATION

REEL DIMENSIONS

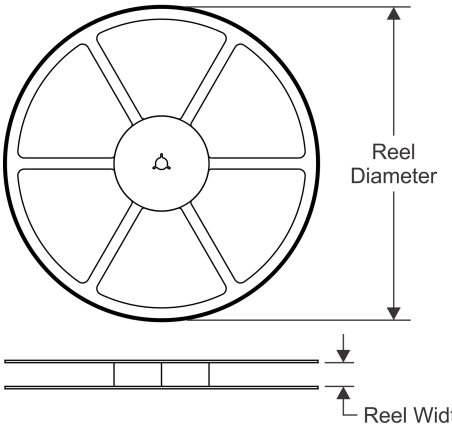

TAPE DIMENSIONS

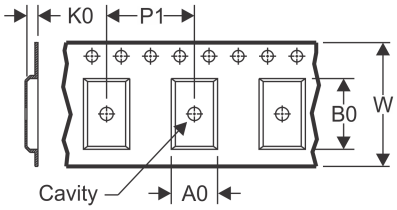

A0	Dimension designed to accommodate the component width
B0	Dimension designed to accommodate the component length
K0	Dimension designed to accommodate the component thickness
W	Overall width of the carrier tape
P1	Pitch between successive cavity centers

QUADRANT ASSIGNMENTS FOR PIN 1 ORIENTATION IN TAPE

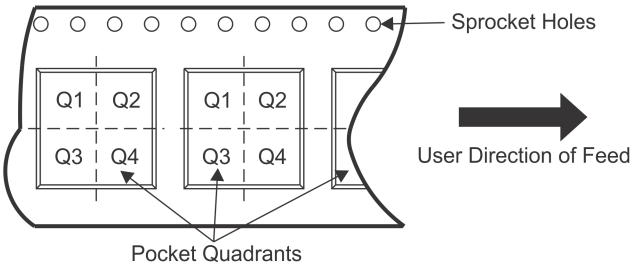

*All dimensions are nominal

Device	Package Type	Package Drawing	Pins	SPQ	Reel Diameter (mm)	Reel Width W1 (mm)	A0 (mm)	B0 (mm)	K0 (mm)	P1 (mm)	W (mm)	Pin1 Quadrant
TLV6003DBVR	SOT-23	DBV	5	3000	180.0	8.4	3.2	3.2	1.4	4.0	8.0	Q3

TAPE AND REEL BOX DIMENSIONS

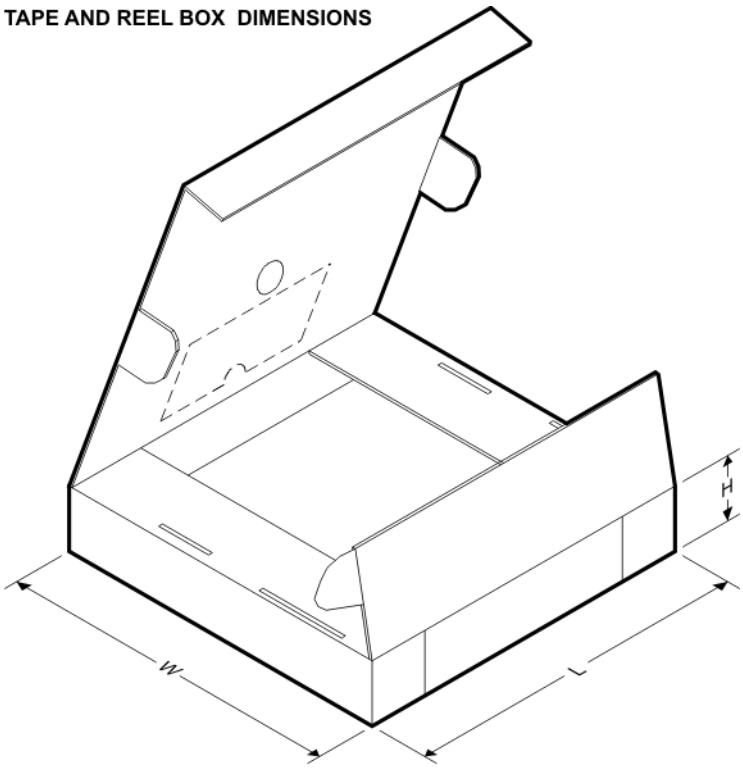

*All dimensions are nominal

Device	Package Type	Package Drawing	Pins	SPQ	Length (mm)	Width (mm)	Height (mm)
TLV6003DBVR	SOT-23	DBV	5	3000	210.0	185.0	35.0

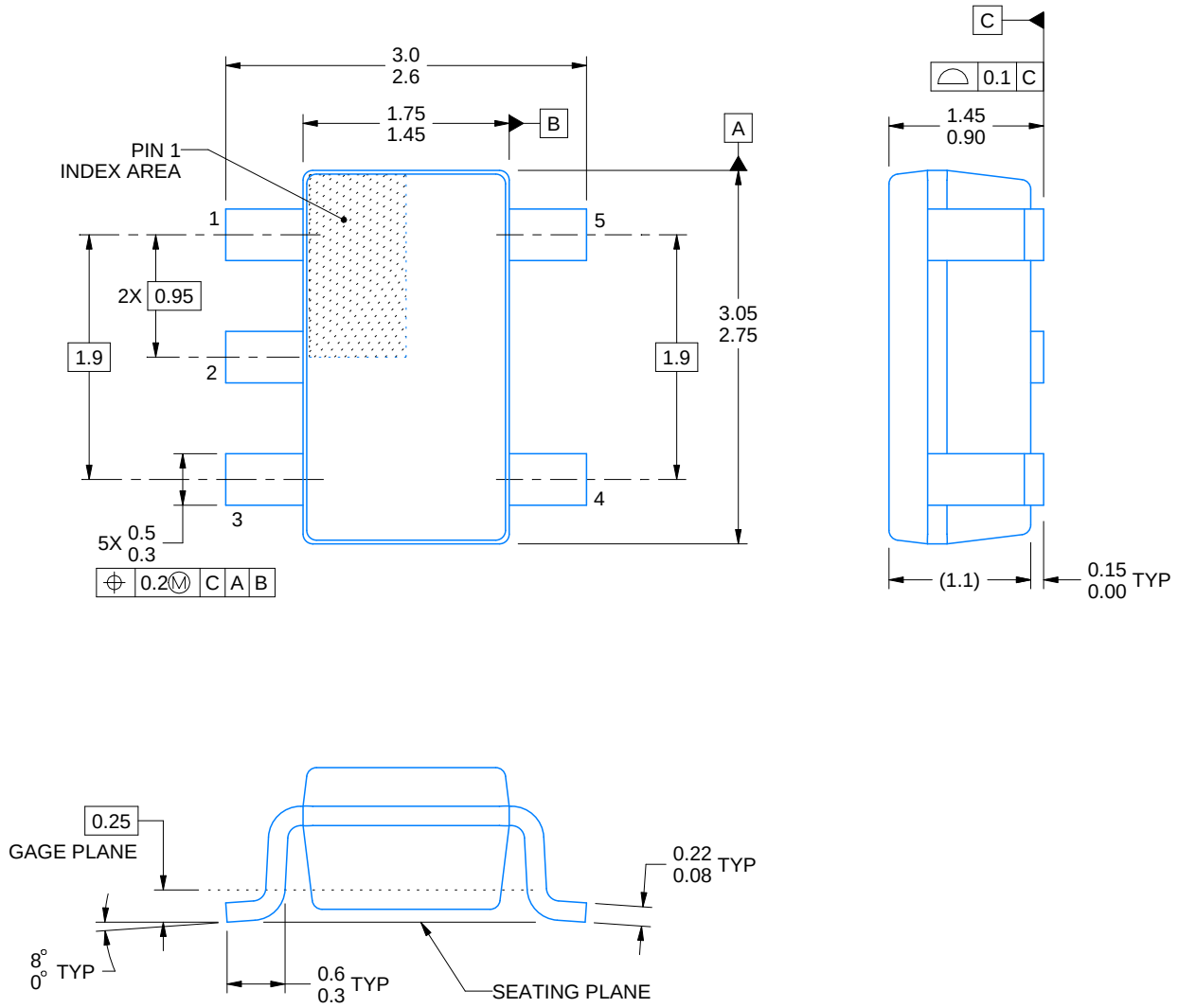

4214839/E 09/2019

NOTES:

1. All linear dimensions are in millimeters. Any dimensions in parenthesis are for reference only. Dimensioning and tolerancing per ASME Y14.5M.
2. This drawing is subject to change without notice.
3. Refernce JEDEC MO-178.
4. Body dimensions do not include mold flash, protrusions, or gate burrs. Mold flash, protrusions, or gate burrs shall not exceed 0.15 mm per side.

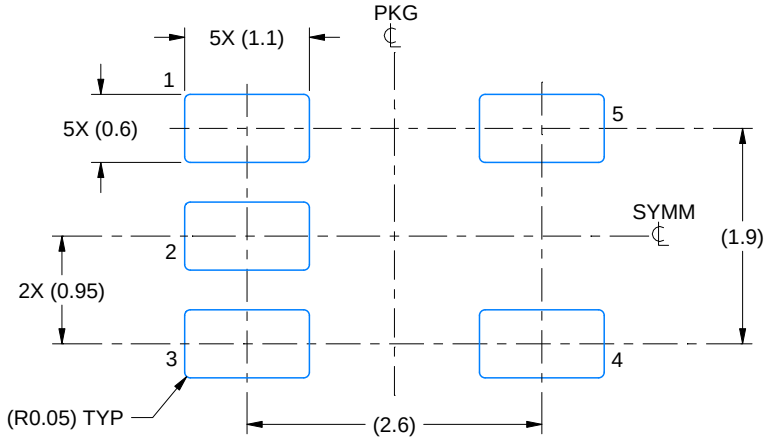

LAND PATTERN EXAMPLE
EXPOSED METAL SHOWN
SCALE:15X

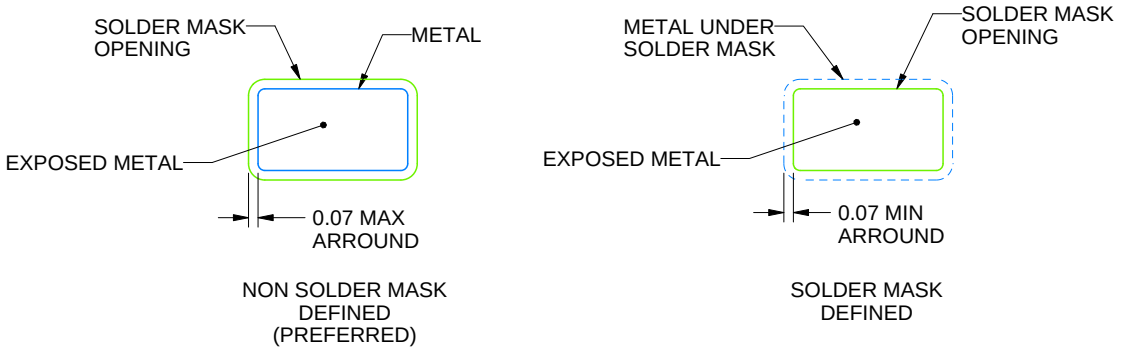

SOLDER MASK DETAILS

4214839/E 09/2019

NOTES: (continued)

5. Publication IPC-7351 may have alternate designs.
6. Solder mask tolerances between and around signal pads can vary based on board fabrication site.

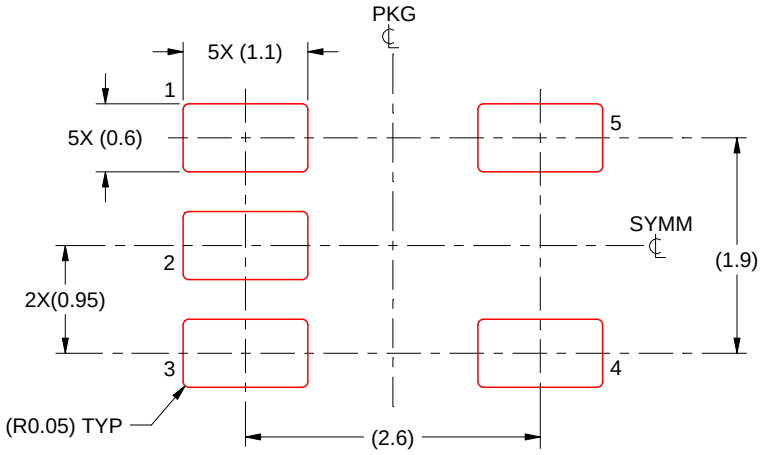

SOLDER PASTE EXAMPLE
BASED ON 0.125 mm THICK STENCIL
SCALE:15X

4214839/E 09/2019

NOTES: (continued)

7. Laser cutting apertures with trapezoidal walls and rounded corners may offer better paste release. IPC-7525 may have alternate design recommendations.
8. Board assembly site may have different recommendations for stencil design.

IMPORTANT NOTICE AND DISCLAIMER

TI PROVIDES TECHNICAL AND RELIABILITY DATA (INCLUDING DATASHEETS), DESIGN RESOURCES (INCLUDING REFERENCE DESIGNS), APPLICATION OR OTHER DESIGN ADVICE, WEB TOOLS, SAFETY INFORMATION, AND OTHER RESOURCES “AS IS” AND WITH ALL FAULTS, AND DISCLAIMS ALL WARRANTIES, EXPRESS AND IMPLIED, INCLUDING WITHOUT LIMITATION ANY IMPLIED WARRANTIES OF MERCHANTABILITY, FITNESS FOR A PARTICULAR PURPOSE OR NON-INFRINGEMENT OF THIRD PARTY INTELLECTUAL PROPERTY RIGHTS.

These resources are intended for skilled developers designing with TI products. You are solely responsible for (1) selecting the appropriate TI products for your application, (2) designing, validating and testing your application, and (3) ensuring your application meets applicable standards, and any other safety, security, or other requirements. These resources are subject to change without notice. TI grants you permission to use these resources only for development of an application that uses the TI products described in the resource. Other reproduction and display of these resources is prohibited. No license is granted to any other TI intellectual property right or to any third party intellectual property right. TI disclaims responsibility for, and you will fully indemnify TI and its representatives against, any claims, damages, costs, losses, and liabilities arising out of your use of these resources.

TI’s products are provided subject to TI’s Terms of Sale (www.ti.com/legal/termsofsale.html) or other applicable terms available either on ti.com or provided in conjunction with such TI products. TI’s provision of these resources does not expand or otherwise alter TI’s applicable warranties or warranty disclaimers for TI products.

Mailing Address: Texas Instruments, Post Office Box 655303, Dallas, Texas 75265
Copyright © 2019, Texas Instruments Incorporated