74ALVC574

Octal D-type flip-flop; positive edge-trigger; 3-state

Rev. 02 — 8 November 2007 Product data sheet

1. General description

The 74ALVC574 is an octal D-type flip-flop featuring separate D-type inputs for each flip-flop and 3-state outputs for bus-oriented applications. A clock input (CP) and an outputs enable input ($\overline{OE}$) are common to all flip-flops.

The eight flip-flops will store the state of their individual D-inputs that meet the set-up and hold times requirements on the LOW to HIGH CP transition.

When pin $\overline{OE}$ is LOW, the contents of the eight flip-flops is available at the outputs. When pin $\overline{OE}$ is HIGH, the outputs go to the high-impedance OFF-state. Operation of the $\overline{OE}$ input does not affect the state of the flip-flops.

The 74ALVC574 is functionally identical to the 74ALVC374, but has a different pin arrangement.

2. Features

- Wide supply voltage range from 1.65 V to 3.6 V
- 3.6 V tolerant inputs/outputs
- CMOS low power consumption
- Direct interface with TTL levels (2.7 V to 3.6 V)
- Power-down mode
- Latch-up performance exceeds 250 mA
- Complies with JEDEC standards:
  - JESD8-7 (1.65 V to 1.95 V)
  - JESD8-5 (2.3 V to 2.7 V)
  - JESD8B/JESD36 (2.7 V to 3.6 V)
- ESD protection:
  - HBM JESD22-A114E exceeds 2000 V
  - MM JESD22-A115A exceeds 200 V

founded by Philips

3. Ordering information

Table 1. Ordering information

Type number	Package			
	Temperature range	Name	Description	Version
74ALVC574D	–40 °C to +85 °C	SO20	plastic small outline package; 20 leads; body width 7.5 mm	SOT163-1
74ALVC574PW	–40 °C to +85 °C	TSSOP20	plastic thin shrink small outline package; 20 leads; body width 4.4 mm	SOT360-1
74ALVC574BQ	–40 °C to +85 °C	DHVQFN20	plastic dual in-line compatible thermal enhanced very thin quad flat package; no leads; 20 terminals; body 2.5 × 4.5 × 0.85 mm	SOT764-1

4. Functional diagram

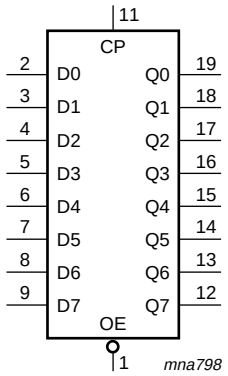

Fig 1. Logic symbol

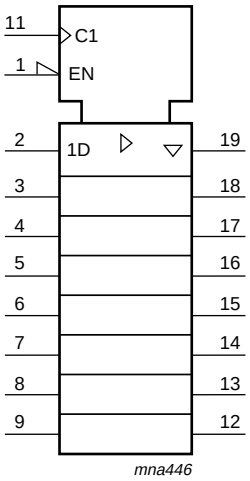

Fig 2. IEC logic symbol

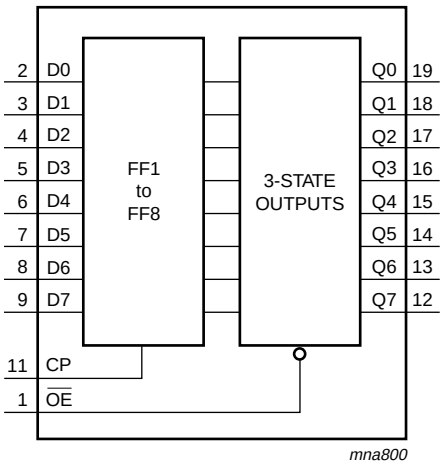

Fig 3. Functional diagram

© NXP B.V. 2007. All rights reserved.

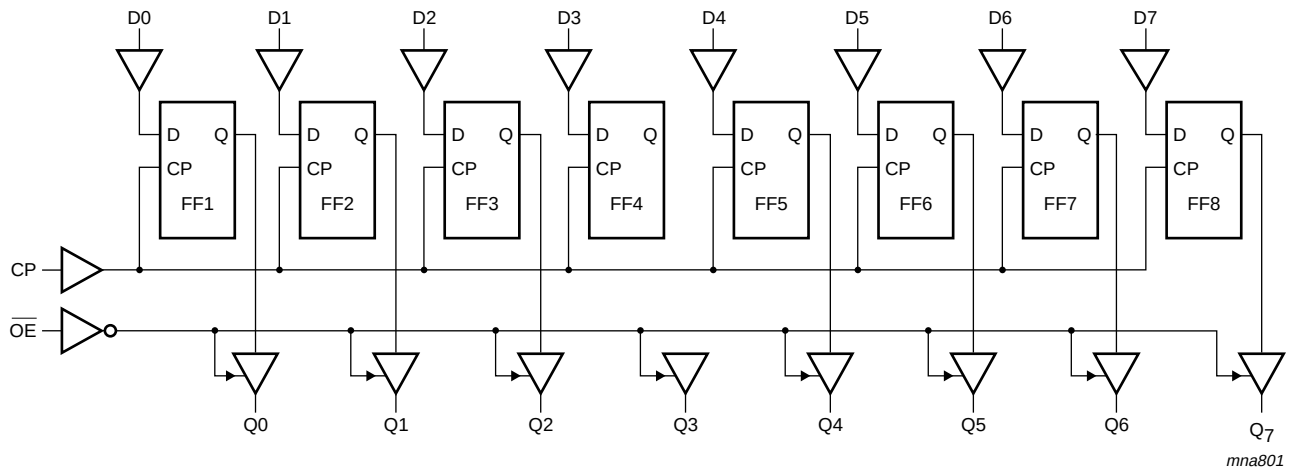

Fig 4. Logic diagram

© NXP B.V. 2007. All rights reserved.

5. Pinning information

5.1 Pinning

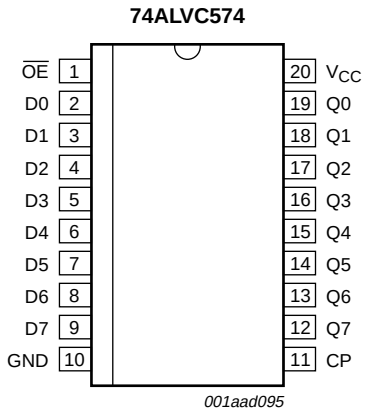

Fig 5. Pin configuration SO20 and TSSOP20

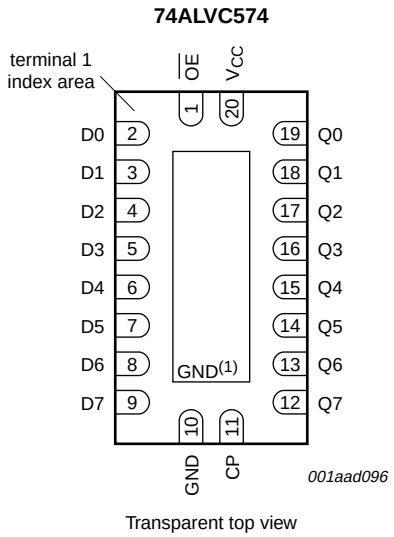

(1) The die substrate is attached to this pad using conductive die attach material. It can not be used as a supply pin or input.

Fig 6. Pin configuration DHVQFN20

5.2 Pin description

Table 2. Pin description

Symbol	Pin	Description
D[0:7]	2, 3, 4, 5, 6, 7, 8, 9	data input
CP	11	clock input (LOW to HIGH, edge-triggered)
$\overline{OE}$	1	output enable input (active LOW)
Q[0:7]	19, 18, 17, 16, 15, 14, 13, 12	3-state flip-flop output
V_{CC}	20	supply voltage
GND	10	ground (0 V)

© NXP B.V. 2007. All rights reserved.

6. Functional description

Table 3. Function table[1]

Operating mode	Input			Internal flip-flop	Output
	$\overline{OE}$	CP	Dn		Qn
Load and read register	L	↑	l	L	L
	L	↑	h	H	H
Load register and disable outputs	H	↑	l	L	Z
	H	↑	h	H	Z

[1] H = HIGH voltage level
h = HIGH voltage level one set-up time prior to the LOW to HIGH CP transition
L = LOW voltage level
l = LOW voltage level one set-up time prior to the LOW to HIGH CP transition
Z = high-impedance OFF-state
↑ = LOW to HIGH clock transition

7. Limiting values

Table 4. Limiting values

In accordance with the Absolute Maximum Rating System (IEC 60134). Voltages are referenced to GND (ground = 0 V).

Symbol	Parameter	Conditions		Min	Max	Unit
V_{CC}	supply voltage			–0.5	+4.6	V
I_{IK}	input clamping current	$V_I < 0$ V		–50	-	mA
V_I	input voltage			–0.5	+4.6	V
I_{OK}	output clamping current	$V_O > V_{CC}$ or $V_O < 0$ V		-	±50	mA
V_O	output voltage	output HIGH or LOW state	[1] [2]	–0.5	V_{CC} + 0.5	V
		output 3-state		–0.5	+4.6	V
		power-down mode, V_{CC} = 0 V	[2]	–0.5	+4.6	V
I_O	output current	V_O = 0 V to V_{CC}		-	±50	mA
I_{CC}	supply current			-	100	mA
I_{GND}	ground current			–100	-	mA
T_{stg}	storage temperature			–65	+150	°C
P_{tot}	total power dissipation	T_{amb} = –40 °C to +85 °C	[3]	-	500	mW

[1] The input and output voltage ratings may be exceeded if the input and output current ratings are observed.

[2] When V_{CC} = 0 V (power-down mode), the output voltage can be 3.6 V in normal operation.

[3] For SO20 packages: above 70 °C derate linearly with 8 mW/K.
For TSSOP20 packages: above 60 °C derate linearly with 5.5 mW/K.
For DHVQFN20 packages: above 60 °C derate linearly with 4.5 mW/K.

© NXP B.V. 2007. All rights reserved.

8. Recommended operating conditions

Table 5. Recommended operating conditions

Symbol	Parameter	Conditions	Min	Max	Unit
V_{CC}	supply voltage		1.65	3.6	V
V_I	input voltage		0	3.6	V
V_O	output voltage	output HIGH or LOW state	0	V_{CC}	V
		output 3-state	0	3.6	V
		power-down mode; V_{CC} = 0 V	0	3.6	V
T_{amb}	ambient temperature	in free air	–40	+85	°C
$\Delta t/\Delta V$	input transition rise and fall rate	V_{CC} = 1.65 V to 2.7 V	0	20	ns/V
		V_{CC} = 2.7 V to 3.6 V	0	10	ns/V

9. Static characteristics

Table 6. Static characteristics

At recommended operating conditions. Voltages are referenced to GND (ground = 0 V).

Symbol	Parameter	Conditions	–40 °C to +85 °C			Unit
			Min	Typ[1]	Max	
V_{IH}	HIGH-level input voltage	V_{CC} = 1.65 V to 1.95 V	0.65 × V_{CC}	-	-	V
		V_{CC} = 2.3 V to 2.7 V	1.7	-	-	V
		V_{CC} = 2.7 V to 3.6 V	2.0	-	-	V
V_{IL}	LOW-level input voltage	V_{CC} = 1.65 V to 1.95 V	-	-	0.35 × V_{CC}	V
		V_{CC} = 2.3 V to 2.7 V	-	-	0.7	V
		V_{CC} = 2.7 V to 3.6 V	-	-	0.8	V
V_{OH}	HIGH-level output voltage	$V_I = V_{IH}$ or V_{IL}				
		I_O = –100 μA; V_{CC} = 1.65 V to 3.6 V	V_{CC} – 0.2	-	-	V
		I_O = –6 mA; V_{CC} = 1.65 V	1.25	1.51	-	V
		I_O = –12 mA; V_{CC} = 2.3 V	1.8	2.10	-	V
		I_O = –18 mA; V_{CC} = 2.3 V	1.7	2.01	-	V
		I_O = –12 mA; V_{CC} = 2.7 V	2.2	2.53	-	V
		I_O = –18 mA; V_{CC} = 3.0 V	2.4	2.76	-	V
		I_O = –24 mA; V_{CC} = 3.0 V	2.2	2.68	-	V
V_{OL}	LOW-level output voltage	$V_I = V_{IH}$ or V_{IL}				
		I_O = 100 μA; V_{CC} = 1.65 V to 3.6 V	-	-	0.2	V
		I_O = 6 mA; V_{CC} = 1.65 V	-	0.11	0.3	V
		I_O = 12 mA; V_{CC} = 2.3 V	-	0.17	0.4	V
		I_O = 18 mA; V_{CC} = 2.3 V	-	0.25	0.6	V
		I_O = 12 mA; V_{CC} = 2.7 V	-	0.16	0.4	V
		I_O = 18 mA; V_{CC} = 3.0 V	-	0.23	0.4	V
		I_O = 24 mA; V_{CC} = 3.0 V	-	0.30	0.55	V
I_I	input leakage current	V_{CC} = 3.6 V; V_I = 3.6 V or GND	-	±0.1	±5	μA

© NXP B.V. 2007. All rights reserved.

Table 6. Static characteristics *...continued*

At recommended operating conditions. Voltages are referenced to GND (ground = 0 V).

Symbol	Parameter	Conditions	−40 °C to +85 °C			Unit
			Min	Typ[1]	Max	
I_{OZ}	OFF-state output current	$V_I = V_{IH}$ or V_{IL}; V_{CC} = 1.65 V to 3.6 V; V_O = 3.6 V or GND;	-	±0.1	±10	μA
I_{OFF}	power-off leakage current	V_{CC} = 0 V; V_I or V_O = 0 V to 3.6 V	-	±0.1	±10	μA
I_{CC}	supply current	V_{CC} = 3.6 V; $V_I = V_{CC}$ or GND; I_O = 0 A	-	0.2	10	μA
ΔI_{CC}	additional supply current	per input pin; V_{CC} = 3.0 V to 3.6 V; $V_I = V_{CC} - 0.6$ V; I_O = 0 A	-	5	750	μA
C_I	input capacitance		-	3.5	-	pF

[1] All typical values are measured at V_{CC} = 3.3 V (unless stated otherwise) and T_{amb} = 25 °C.

10. Dynamic characteristics

Table 7. Dynamic characteristics

Voltages are referenced to GND (ground = 0 V). For test circuit see Figure 10.

Symbol	Parameter	Conditions		−40 °C to +85 °C			Unit
				Min	Typ[1]	Max	
t_{pd}	propagation delay	CP to Qn; see Figure 7	[2]				
		V_{CC} = 1.65 V to 1.95 V		1.0	3.1	6.4	ns
		V_{CC} = 2.3 V to 2.7 V		1.0	2.3	3.9	ns
		V_{CC} = 2.7 V		1.0	2.5	3.6	ns
		V_{CC} = 3.0 V to 3.6 V		1.0	2.5	3.6	ns
t_{en}	enable time	$\overline{OE}$ to Qn; see Figure 8	[2]				
		V_{CC} = 1.65 V to 1.95 V		1.0	3.2	6.4	ns
		V_{CC} = 2.3 V to 2.7 V		1.0	2.6	4.5	ns
		V_{CC} = 2.7 V		1.0	3.2	4.6	ns
		V_{CC} = 3.0 V to 3.6 V		1.0	2.4	4.0	ns
t_{dis}	disable time	$\overline{OE}$ to Qn; see Figure 8	[2]				
		V_{CC} = 1.65 V to 1.95 V		1.5	3.6	7.0	ns
		V_{CC} = 2.3 V to 2.7 V		1.0	2.3	4.4	ns
		V_{CC} = 2.7 V		1.5	2.9	4.4	ns
		V_{CC} = 3.0 V to 3.6 V		1.0	2.8	4.4	ns
t_W	pulse width	clock HIGH or LOW; see Figure 7					
		V_{CC} = 1.65 V to 1.95 V		3.8	1.1	-	ns
		V_{CC} = 2.3 V to 2.7 V		3.3	0.9	-	ns
		V_{CC} = 2.7 V		3.3	0.8	-	ns
		V_{CC} = 3.0 V to 3.6 V		3.3	1.2	-	ns

© NXP B.V. 2007. All rights reserved.

Table 7. Dynamic characteristics *...continued*

Voltages are referenced to GND (ground = 0 V). For test circuit see Figure 10.

Symbol	Parameter	Conditions	–40 °C to +85 °C			Unit
			Min	Typ[1]	Max	
t_{su}	set-up time	Dn to CP; see Figure 9				
		V_{CC} = 1.65 V to 1.95 V	0.8	–0.1	-	ns
		V_{CC} = 2.3 V to 2.7 V	0.8	0.1	-	ns
		V_{CC} = 2.7 V	0.8	0.3	-	ns
		V_{CC} = 3.0 V to 3.6 V	0.8	0.0	-	ns
t_h	hold time	Dn to CP; see Figure 9				
		V_{CC} = 1.65 V to 1.95 V	0.8	–0.1	-	ns
		V_{CC} = 2.3 V to 2.7 V	0.8	0.1	-	ns
		V_{CC} = 2.7 V	0.8	0.4	-	ns
		V_{CC} = 3.0 V to 3.6 V	0.7	–0.1	-	ns
f_{max}	maximum frequency	see Figure 7				
		V_{CC} = 2.3 V to 2.7 V	100	200	-	MHz
		V_{CC} = 2.7 V	100	200	-	MHz
		V_{CC} = 3.0 V to 3.6 V	150	300	-	MHz
C_{PD}	power dissipation capacitance	per flip-flop; V_I = GND to V_{CC}; V_{CC} = 3.3 V [3]				
		outputs HIGH or LOW state	-	21	-	pF
		outputs 3-state	-	13	-	pF

[1] Typical values are measured at T_{amb} = 25 °C

[2] t_{pd} is the same as t_{PHL} and t_{PLH}.
t_{en} is the same as t_{PZH} and t_{PZL}.
t_{dis} is the same as t_{PHZ} and t_{PLZ}.

[3] C_{PD} is used to determine the dynamic power dissipation (P_D in µW).
$P_D = C_{PD} \times V_{CC}^2 \times f_i \times N + \Sigma(C_L \times V_{CC}^2 \times f_o)$ where:
f_i = input frequency in MHz; f_o = output frequency in MHz
C_L = output load capacitance in pF
V_{CC} = supply voltage in Volts
N = number of inputs switching
$\Sigma(C_L \times V_{CC}^2 \times f_o)$ = sum of the outputs

© NXP B.V. 2007. All rights reserved.

11. Waveforms

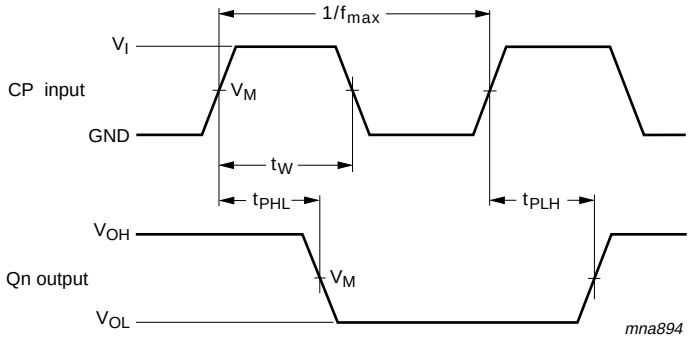

Measurement points are given in Table 8.

V_{OL} and V_{OH} are the typical output voltage levels that occur with the output load.

Fig 7. Clock (CP) to output (Qn) propagation delays, the clock pulse width, and the maximum frequency

Table 8. Measurement points

Supply voltage	Input	Output		
V_{CC}	V_M	V_M	V_X	V_Y
1.65 V to 1.95 V	$0.5V_{CC}$	$0.5V_{CC}$	V_{OL} + 0.15 V	V_{OH} – 0.15 V
2.3 V to 2.7 V	$0.5V_{CC}$	$0.5V_{CC}$	V_{OL} + 0.15 V	V_{OH} – 0.15 V
2.7 V	1.5 V	1.5 V	V_{OL} + 0.3 V	V_{OH} – 0.3 V
3.0 V to 3.6 V	1.5 V	1.5 V	V_{OL} + 0.3 V	V_{OH} – 0.3 V

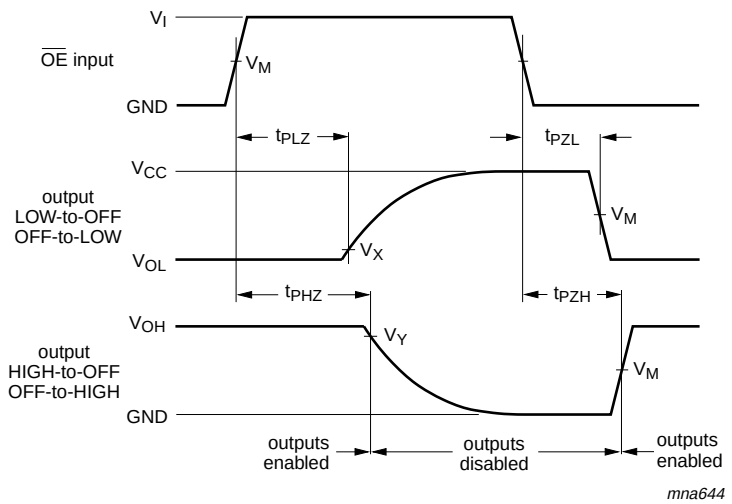

Measurement points are given in Table 8.

V_{OL} and V_{OH} are the typical output voltage levels that occur with the output load.

Fig 8. Enable and disable times

© NXP B.V. 2007. All rights reserved.

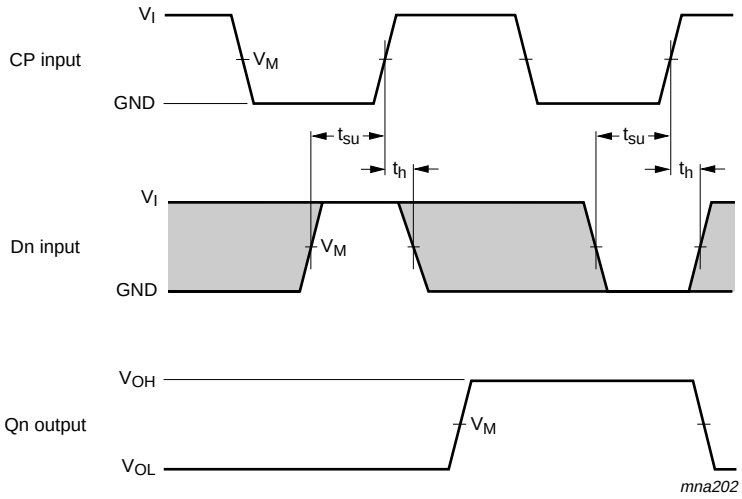

Measurement points are given in Table 8.

V_{OL} and V_{OH} are the typical output voltage levels that occur with the output load.

The shaded areas indicate when the input is permitted to change for predicable output performance.

Fig 9. Data set-up and hold times for the Dn input to the CP input

© NXP B.V. 2007. All rights reserved.

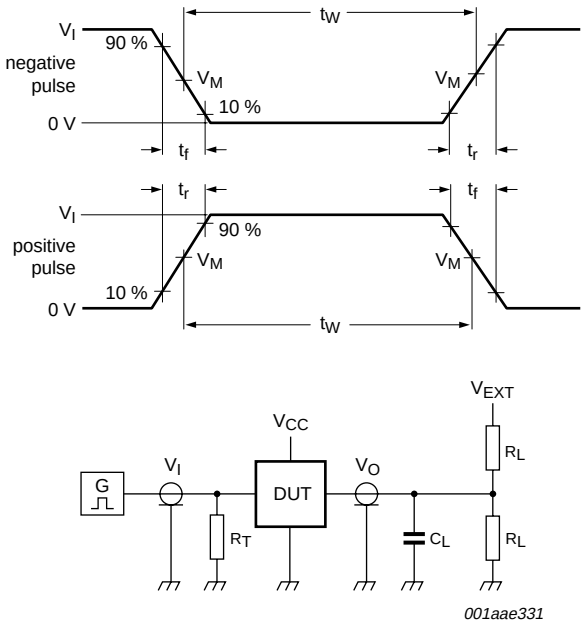

Test data is given in Table 9.

Definitions for test circuit:

R_L = Load resistance.

C_L = Load capacitance including jig and probe capacitance.

R_T = Termination resistance should be equal to output impedance Z_o of the pulse generator.

V_{EXT} = External voltage for measuring switching times.

Fig 10. Test circuit for switching times

Table 9. Test data

Supply voltage	Input		Load		V_{EXT}		
	V_I	t_r, t_f	C_L	R_L	t_{PLH}, t_{PHL}	t_{PLZ}, t_{PZL}	t_{PHZ}, t_{PZH}
1.65 V to 1.95 V	V_{CC}	≤ 2.0 ns	30 pF	1 kΩ	open	$2V_{CC}$	GND
2.3 V to 2.7 V	V_{CC}	≤ 2.0 ns	30 pF	500 Ω	open	$2V_{CC}$	GND
2.7 V	2.7 V	≤ 2.5 ns	50 pF	500 Ω	open	6 V	GND
3.0 V to 3.6 V	2.7 V	≤ 2.5 ns	50 pF	500 Ω	open	6 V	GND

© NXP B.V. 2007. All rights reserved.

12. Package outline

SO20: plastic small outline package; 20 leads; body width 7.5 mm **SOT163-1**

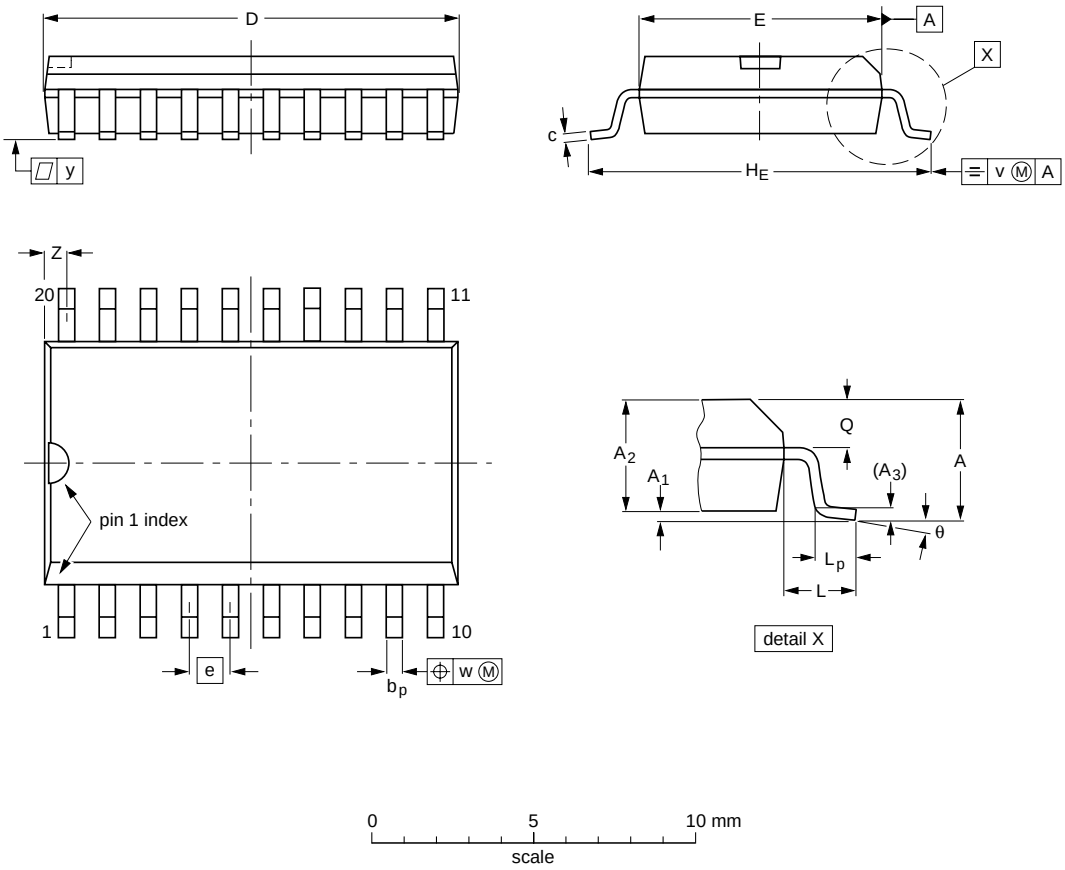

DIMENSIONS (inch dimensions are derived from the original mm dimensions)

UNIT	A max.	A_1	A_2	A_3	b_p	c	D (1)	E (1)	e	H_E	L	L_p	Q	v	w	y	Z (1)	θ
mm	2.65	0.3 0.1	2.45 2.25	0.25	0.49 0.36	0.32 0.23	13.0 12.6	7.6 7.4	1.27	10.65 10.00	1.4	1.1 0.4	1.1 1.0	0.25	0.25	0.1	0.9 0.4	8° 0°
inches	0.1	0.012 0.004	0.096 0.089	0.01	0.019 0.014	0.013 0.009	0.51 0.49	0.30 0.29	0.05	0.419 0.394	0.055	0.043 0.016	0.043 0.039	0.01	0.01	0.004	0.035 0.016	

Note

1. Plastic or metal protrusions of 0.15 mm (0.006 inch) maximum per side are not included.

OUTLINE VERSION	REFERENCES				EUROPEAN PROJECTION	ISSUE DATE
	IEC	JEDEC	JEITA			
SOT163-1	075E04	MS-013				~~99-12-27~~ 03-02-19

Fig 11. Package outline SOT163-1 (SO20)

© NXP B.V. 2007. All rights reserved.

TSSOP20: plastic thin shrink small outline package; 20 leads; body width 4.4 mm **SOT360-1**

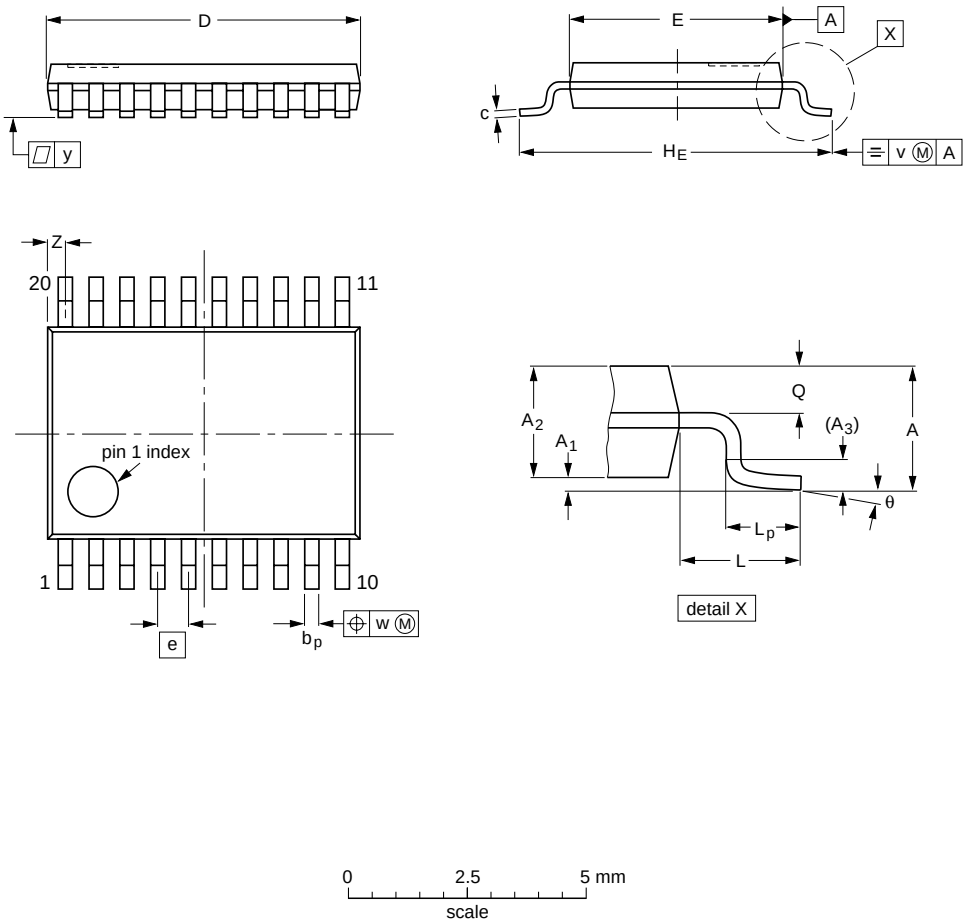

DIMENSIONS (mm are the original dimensions)

UNIT	A max.	A_1	A_2	A_3	b_p	c	D (1)	E (2)	e	H_E	L	L_p	Q	v	w	y	Z (1)	θ
mm	1.1	0.15 0.05	0.95 0.80	0.25	0.30 0.19	0.2 0.1	6.6 6.4	4.5 4.3	0.65	6.6 6.2	1	0.75 0.50	0.4 0.3	0.2	0.13	0.1	0.5 0.2	8° 0°

Notes

1. Plastic or metal protrusions of 0.15 mm maximum per side are not included.
2. Plastic interlead protrusions of 0.25 mm maximum per side are not included.

OUTLINE VERSION	REFERENCES				EUROPEAN PROJECTION	ISSUE DATE
	IEC	JEDEC	JEITA			
SOT360-1		MO-153				~~99-12-27~~ 03-02-19

Fig 12. Package outline SOT360-1 (TSSOP20)

© NXP B.V. 2007. All rights reserved.

DHVQFN20: plastic dual in-line compatible thermal enhanced very thin quad flat package; no leads; 20 terminals; body 2.5 x 4.5 x 0.85 mm **SOT764-1**

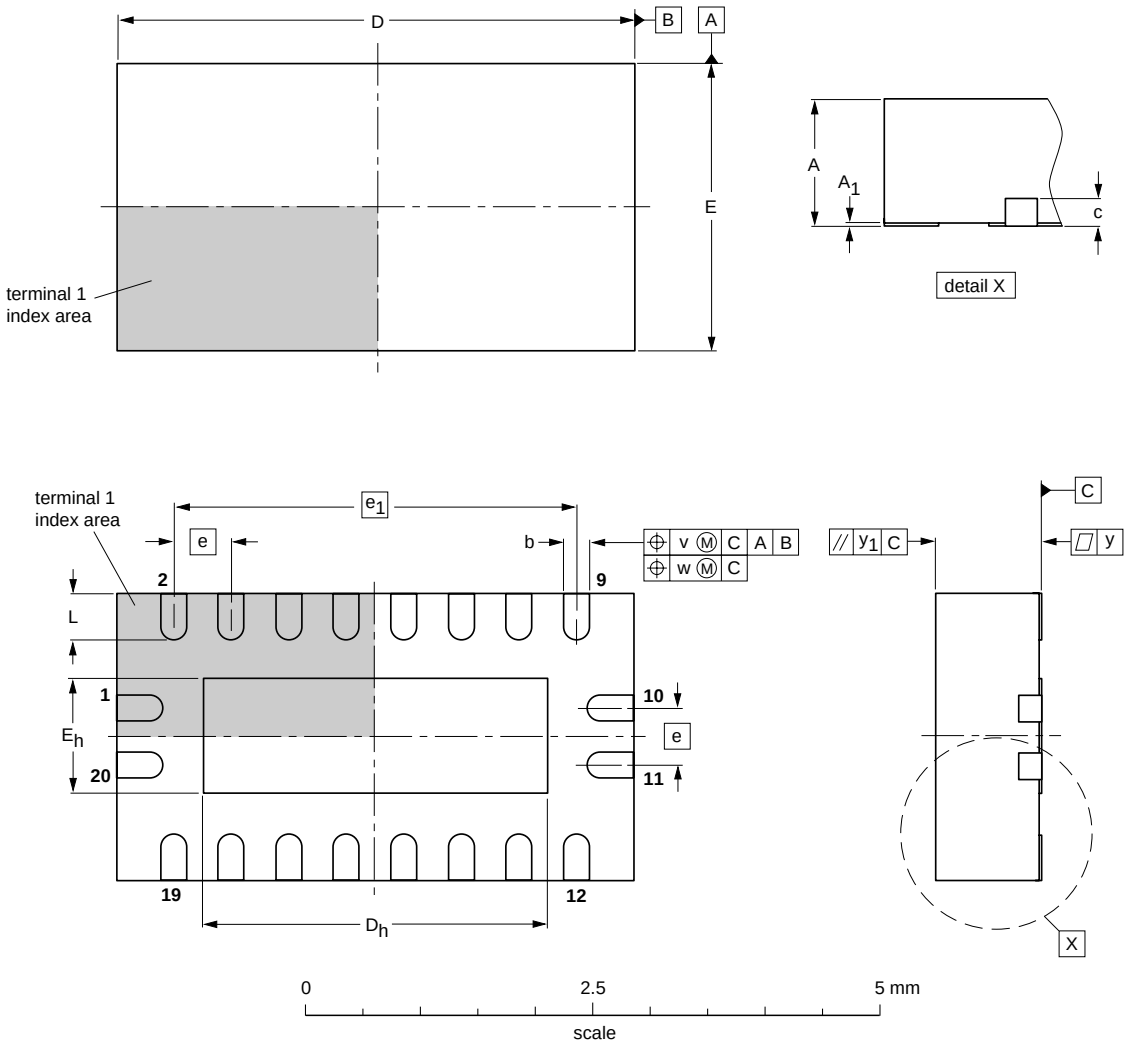

DIMENSIONS (mm are the original dimensions)

UNIT	A(1) max.	A_1	b	c	D(1)	D_h	E(1)	E_h	e	e_1	L	v	w	y	y_1
mm	1	0.05 0.00	0.30 0.18	0.2	4.6 4.4	3.15 2.85	2.6 2.4	1.15 0.85	0.5	3.5	0.5 0.3	0.1	0.05	0.05	0.1

Note

1. Plastic or metal protrusions of 0.075 mm maximum per side are not included.

OUTLINE VERSION	REFERENCES				EUROPEAN PROJECTION	ISSUE DATE
	IEC	JEDEC	JEITA			
SOT764-1	- - -	MO-241	- - -			~~02-10-17~~ 03-01-27

Fig 13. Package outline SOT764-1 (DHVQFN20)

© NXP B.V. 2007. All rights reserved.

13. Abbreviations

Table 10. Abbreviations

Acronym	Description
CDM	Charged Device Model
DUT	Device Under Test
ESD	ElectroStatic Discharge
HBM	Human Body Model
MM	Machine Model
TTL	Transistor-Transistor Logic

14. Revision history

Table 11. Revision history

Document ID	Release date	Data sheet status	Change notice	Supersedes
74ALVC574_2	20071108	Product data sheet	-	74ALVC574_1
Modifications:	• The format of this data sheet has been redesigned to comply with the new identity guidelines of NXP Semiconductors. • Legal texts have been adapted to the new company name where appropriate. • Section 3: DHVQFN20 package added. • Section 8: derating values added for DHVQFN20 package. • Section 12: outline drawing added for DHVQFN20 package.			
74ALVC574_1	20020304	Product specification	-	-

© NXP B.V. 2007. All rights reserved.

15. Legal information

15.1 Data sheet status

Document status[1][2]	Product status[3]	Definition
Objective [short] data sheet	Development	This document contains data from the objective specification for product development.
Preliminary [short] data sheet	Qualification	This document contains data from the preliminary specification.
Product [short] data sheet	Production	This document contains the product specification.

[1] Please consult the most recently issued document before initiating or completing a design.

[2] The term 'short data sheet' is explained in section "Definitions".

[3] The product status of device(s) described in this document may have changed since this document was published and may differ in case of multiple devices. The latest product status information is available on the Internet at URL http://www.nxp.com.

15.2 Definitions

Draft — The document is a draft version only. The content is still under internal review and subject to formal approval, which may result in modifications or additions. NXP Semiconductors does not give any representations or warranties as to the accuracy or completeness of information included herein and shall have no liability for the consequences of use of such information.

Short data sheet — A short data sheet is an extract from a full data sheet with the same product type number(s) and title. A short data sheet is intended for quick reference only and should not be relied upon to contain detailed and full information. For detailed and full information see the relevant full data sheet, which is available on request via the local NXP Semiconductors sales office. In case of any inconsistency or conflict with the short data sheet, the full data sheet shall prevail.

15.3 Disclaimers

General — Information in this document is believed to be accurate and reliable. However, NXP Semiconductors does not give any representations or warranties, expressed or implied, as to the accuracy or completeness of such information and shall have no liability for the consequences of use of such information.

Right to make changes — NXP Semiconductors reserves the right to make changes to information published in this document, including without limitation specifications and product descriptions, at any time and without notice. This document supersedes and replaces all information supplied prior to the publication hereof.

Suitability for use — NXP Semiconductors products are not designed, authorized or warranted to be suitable for use in medical, military, aircraft, space or life support equipment, nor in applications where failure or malfunction of an NXP Semiconductors product can reasonably be expected to result in personal injury, death or severe property or environmental damage. NXP Semiconductors accepts no liability for inclusion and/or use of NXP Semiconductors products in such equipment or applications and therefore such inclusion and/or use is at the customer's own risk.

Applications — Applications that are described herein for any of these products are for illustrative purposes only. NXP Semiconductors makes no representation or warranty that such applications will be suitable for the specified use without further testing or modification.

Limiting values — Stress above one or more limiting values (as defined in the Absolute Maximum Ratings System of IEC 60134) may cause permanent damage to the device. Limiting values are stress ratings only and operation of the device at these or any other conditions above those given in the Characteristics sections of this document is not implied. Exposure to limiting values for extended periods may affect device reliability.

Terms and conditions of sale — NXP Semiconductors products are sold subject to the general terms and conditions of commercial sale, as published at http://www.nxp.com/profile/terms, including those pertaining to warranty, intellectual property rights infringement and limitation of liability, unless explicitly otherwise agreed to in writing by NXP Semiconductors. In case of any inconsistency or conflict between information in this document and such terms and conditions, the latter will prevail.

No offer to sell or license — Nothing in this document may be interpreted or construed as an offer to sell products that is open for acceptance or the grant, conveyance or implication of any license under any copyrights, patents or other industrial or intellectual property rights.

15.4 Trademarks

Notice: All referenced brands, product names, service names and trademarks are the property of their respective owners.

16. Contact information

For additional information, please visit: **http://www.nxp.com**

For sales office addresses, send an email to: **salesaddresses@nxp.com**

© NXP B.V. 2007. All rights reserved.

17. Contents

1 General description 1
2 Features 1
3 Ordering information 2
4 Functional diagram 2
5 Pinning information 4
5.1 Pinning 4
5.2 Pin description 4
6 Functional description 5
7 Limiting values 5
8 Recommended operating conditions 6
9 Static characteristics 6
10 Dynamic characteristics 7
11 Waveforms 9
12 Package outline 12
13 Abbreviations 15
14 Revision history 15
15 Legal information 16
15.1 Data sheet status 16
15.2 Definitions 16
15.3 Disclaimers 16
15.4 Trademarks 16
16 Contact information 16
17 Contents 17

Please be aware that important notices concerning this document and the product(s) described herein, have been included in section 'Legal information'.

founded by PHILIPS

© NXP B.V. 2007. All rights reserved.

For more information, please visit: http://www.nxp.com
For sales office addresses, please send an email to: salesaddresses@nxp.com

Date of release: 8 November 2007
Document identifier: 74ALVC574_2