Low Drop Voltage Regulator

TLE 4276

Features

- 5 V, 8.5 V, 10 V or variable output voltage
- Output voltage tolerance ≤ ±4%
- 400 mA current capability
- Low-drop voltage
- Inhibit input
- Very low current consumption
- Short-circuit-proof
- Reverse polarity proof
- Suitable for use in automotive electronics
- Green Product (RoHS compliant)
- AEC Qualified

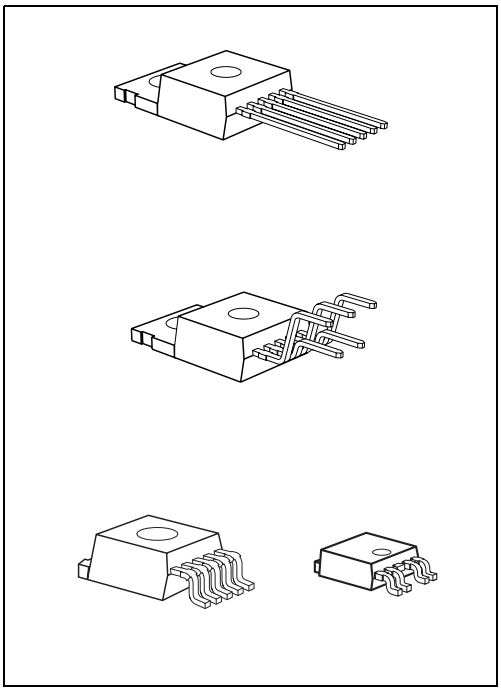

Type	Package	Type	Package
TLE 4276 V50	PG-TO220-5-11	TLE 4276 GV50	PG-TO263-5-1
TLE 4276 V85	PG-TO220-5-11	TLE 4276 GV85	PG-TO263-5-1
TLE 4276 V10	PG-TO220-5-11	TLE 4276 GV10	PG-TO263-5-1
TLE 4276 V	PG-TO220-5-11	TLE 4276 GV	PG-TO263-5-1
TLE 4276 SV50	PG-TO220-5-12	TLE 4276 DV50	PG-TO252-5-11
TLE 4276 SV85	PG-TO220-5-12	TLE 4276 DV	PG-TO252-5-11
TLE 4276 SV	PG-TO220-5-12		

Functional Description

The TLE 4276 is a low-drop voltage regulator in a TO package. The IC regulates an input voltage up to 40 V to $V_{Q,nom}$ = 5.0 V (V50), 8.5 V (V85), 10 V (V10) and adjustable voltage (V). The maximum output current is 400 mA. The IC can be switched off via the inhibit input, which causes the current consumption to drop below 10 µA. The IC is short-circuit-proof and includes temperature protection which turns off the device at overtemperature.

Dimensioning Information on External Components

The input capacitor C_I is necessary for compensation of line influences. Using a resistor of approx. 1 Ω in series with C_I, the oscillating of input inductivity and input capacitance can be damped. The output capacitor C_Q is necessary for the stability of the regulation circuit. Stability is guaranteed at values $C_Q \geq 22$ µF and an ESR of ≤ 3 Ω within the operating temperature range.

Circuit Description

The control amplifier compares a reference voltage to a voltage that is proportional to the output voltage and drives the base of the series transistor via a buffer. Saturation control as a function of the load current prevents any oversaturation of the power element. The IC also incorporates a number of internal circuits for protection against:

- Overload
- Overtemperature
- Reverse polarity

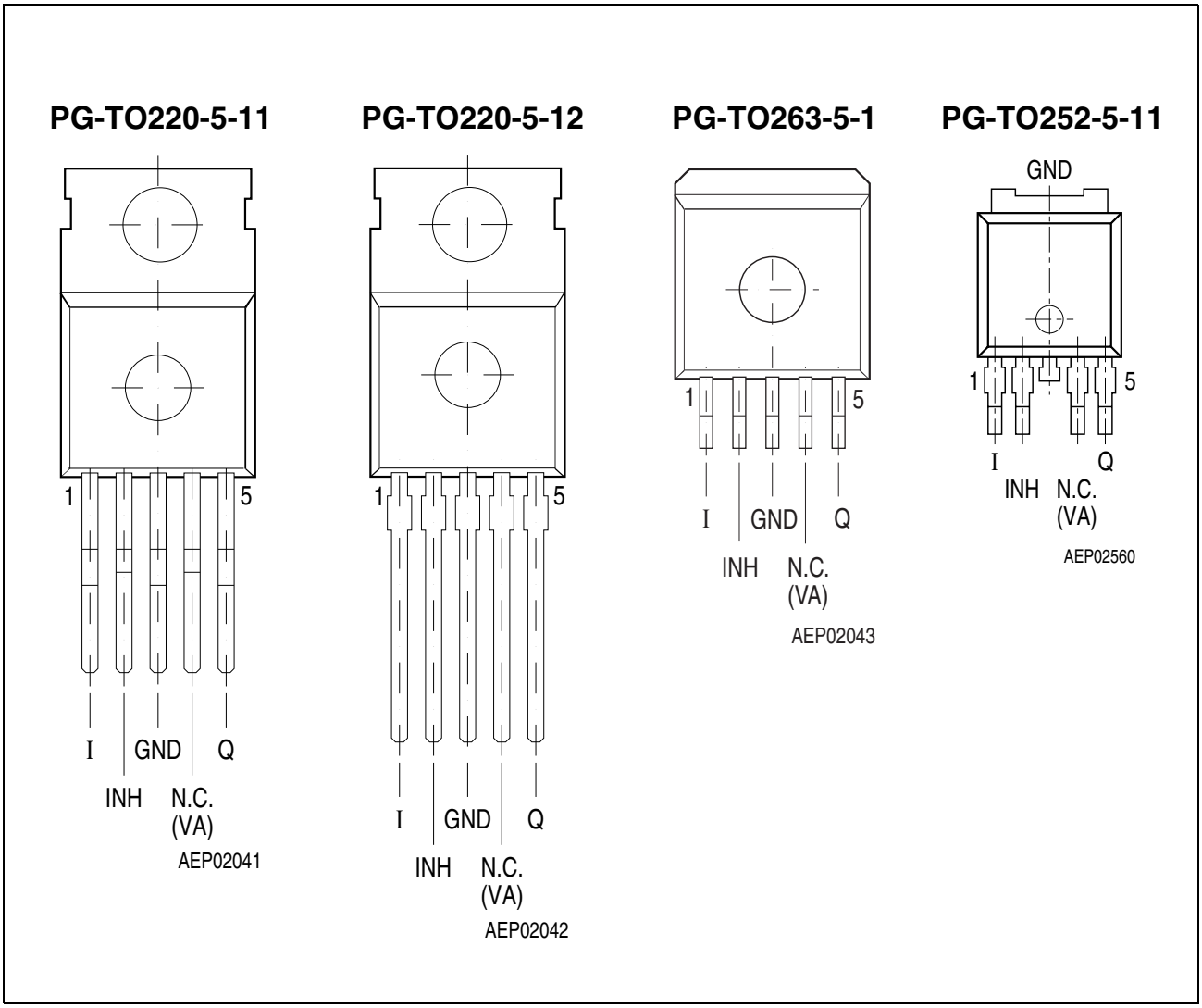

Figure 1 **Pin Configuration** (top view)

Table 1 **Pin Definitions and Functions**

Pin No.	Symbol	Function
1	I	**Input;** block to ground directly at the IC with a ceramic capacitor.
2	INH	**Inhibit;** low-active input.
3	GND	**Ground**
4	N.C. VA	**Not connected** for V50, V85, V10 **Voltage Adjust Input;** only for adjustable version. Connect an external voltage divider to determine the output voltage.
5	Q	**Output;** block to GND with a ≥ 22 µF capacitor, ESR ≤ 3 Ω at 10 kHz
Heatsink		Connect to GND.

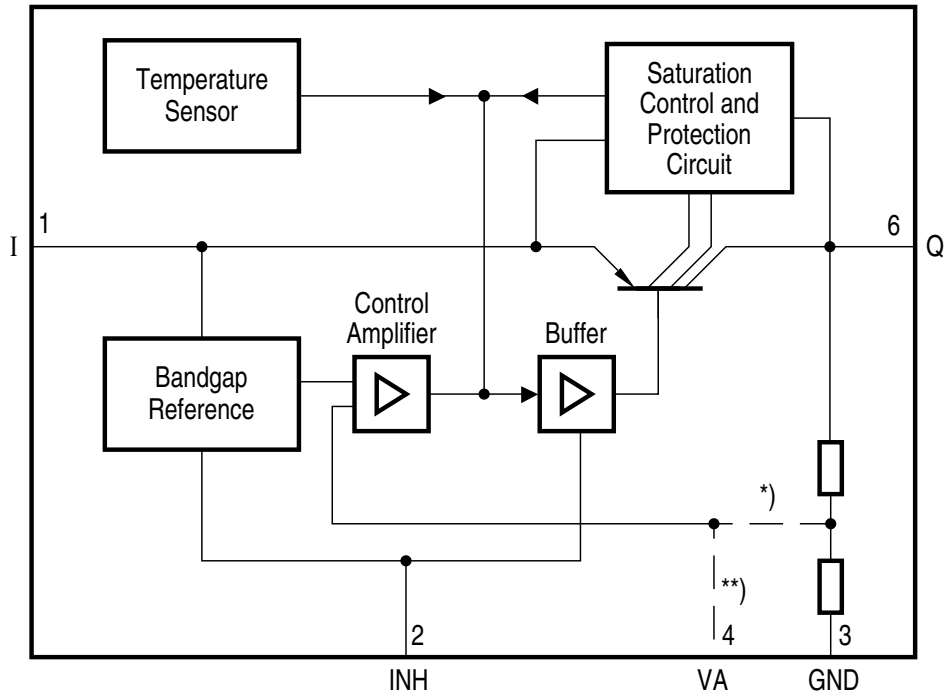

*) For fixed Voltage Regulator only
**) For adjustable Voltage Regulator only

AEB02044

Figure 2 Block Diagram

Table 2 Absolute Maximum Ratings

Parameter	Symbol	Limit Values		Unit	Test Condition
		Min.	Max.		
Input I					
Voltage	V_I	-42	45	V	–
Current	I_I	–	–	–	Internally limited
Inhibit INH					
Voltage	V_{INH}	-42	45	V	–
Voltage Adjust Input VA					
Voltage	V_{VA}	-0.3	10	V	–
Output Q					
Voltage	V_Q	-1.0	40	V	–
Current	I_Q	–	–	–	Internally limited
Ground GND					
Current	I_{GND}	–	100	mA	–
Temperature					
Junction temperature	T_j	-40	150	°C	–
Storage temperature	T_{stg}	-50	150	°C	–

Note: Maximum ratings are absolute ratings; exceeding any one of these values may cause irreversible damage to the integrated circuit.

Table 3 ESD Rating

Parameter	Symbol	Limit Values		Unit	Notes
		Min.	Max.		
ESD Capability	$V_{ESD,HBM}$	2000	–	V	Human Body Model

Table 4 Operating Range

Parameter	Symbol	Limit Values		Unit	Remarks
		Min.	Max.		
Input voltage	V_I	V_Q + 0.5	40	V	Fixed voltage devices V50, V85, V10
Input voltage	V_I	V_Q + 0.5	40	V	Variable device V
Input voltage	V_I	4.5 V	40	V	Variable device V, V_Q < 4 V
Junction temperature	T_j	-40	150	°C	–
Thermal Resistance					
Junction ambient	R_{thj-a}	–	65	K/W	TO220
Junction ambient	R_{thj-a}	–	80	K/W	TO252, TO263[1)]
Junction case	R_{thj-c}	–	4	K/W	–

1) Package mounted on PCB 80 × 80 × 1.5mm^3; 35µ Cu; 5µ Sn; Footprint only; zero airflow.

Table 5 Characteristics

V_I = 13.5 V; -40 °C < T_j < 150 °C (unless otherwise specified)

Parameter	Symbol	Limit Values			Unit	Measuring Condition	Measuring Circuit
		Min.	Typ.	Max.			
Output voltage	V_Q	4.8	5.0	5.2	V	V50-Version 5 mA < I_Q < 400 mA 6 V < V_I < 28 V	1
Output voltage	V_Q	4.8	5.0	5.2	V	V50-Version 5 mA < I_Q < 200 mA 6 V < V_I < 40 V	1
Output voltage	V_Q	8.16	8.50	8.84	V	V85-Version 5 mA < I_Q < 400 mA 9.5 V < V_I < 28 V	1
Output voltage	V_Q	8.16	8.50	8.84	V	V85-Version 5 mA < I_Q < 200 mA 9.5 V < V_I < 40 V	1
Output voltage	V_Q	9.6	10.0	10.4	V	V10-Version 5 mA < I_Q < 400 mA 11 V < V_I < 28 V	1
Output voltage	V_Q	9.6	10.0	10.4	V	V10-Version 5 mA < I_Q < 200 mA 11 V < V_I < 40 V	1
Output voltage tolerance	ΔV_Q	-4	–	4	%	V-Version R_2 < 50 kΩ V_Q + 1 V ≤ V_I ≤ 40 V V_I > 4.5 V 5 mA ≤ I_Q ≤ 400 mA	1
Output current limitation[1)]	I_Q	400	600	1100	mA	–	1
Current consumption; $I_q = I_I - I_Q$	I_q	–	–	10	µA	V_{INH} = 0 V; T_j ≤ 100 °C	1
Current consumption; $I_q = I_I - I_Q$	I_q	–	100	220	µA	I_Q = 1 mA	1
Current consumption; $I_q = I_I - I_Q$	I_q	–	5	10	mA	I_Q = 250 mA	1

Table 5 Characteristics (cont'd)

V_I = 13.5 V; -40 °C < T_j < 150 °C (unless otherwise specified)

Parameter	Symbol	Limit Values			Unit	Measuring Condition	Measuring Circuit
		Min.	Typ.	Max.			
Current consumption; $I_q = I_I - I_Q$	I_q	–	15	25	mA	I_Q = 400 mA	1
Drop voltage[1)]	V_{DR}	–	250	500	mV	V50, V85, V10 I_Q = 250 mA $V_{DR} = V_I - V_Q$	1
Drop voltage[1)]	V_{DR}	–	250	500	mV	variable devices I_Q = 250 mA V_I > 4.5 V $V_{DR} = V_I - V_Q$	1
Load regulation	$\Delta V_{Q,Lo}$	–	5	35	mV	I_Q = 5 mA to 400 mA	1
Line regulation	$\Delta V_{Q,Li}$	–	15	25	mV	ΔV_I = 12 V to 32 V I_Q = 5 mA	1
Power supply ripple rejection	$PSRR$	–	54	–	dB	f_r = 100 Hz; V_r = 0.5 Vpp	1
Temperature output voltage drift	dV_Q/dT	–	0.5	–	–	–	mV/K
Inhibit							
Inhibit on voltage	V_{INH}	–	2	3.5	V	$V_Q \geq 4.9$ V	1
Inhibit off voltage	V_{INH}	0.5	1.7	–	V	$V_Q \leq 0.1$ V	1
Input current	I_{INH}	5	10	20	µA	V_{INH} = 5 V	1

1) Measured when the output voltage V_Q has dropped 100 mV from the nominal value obtained at V_I = 13.5 V.

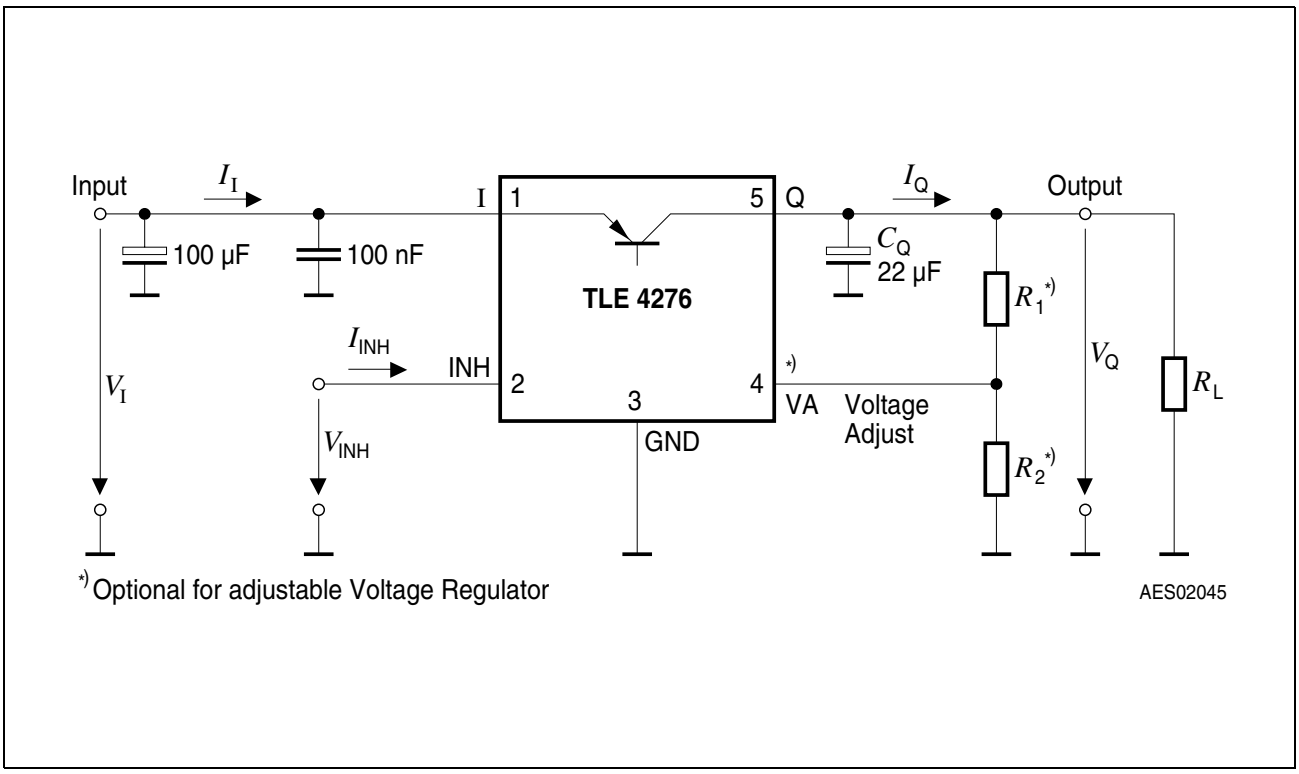

Figure 3 Measuring Circuit

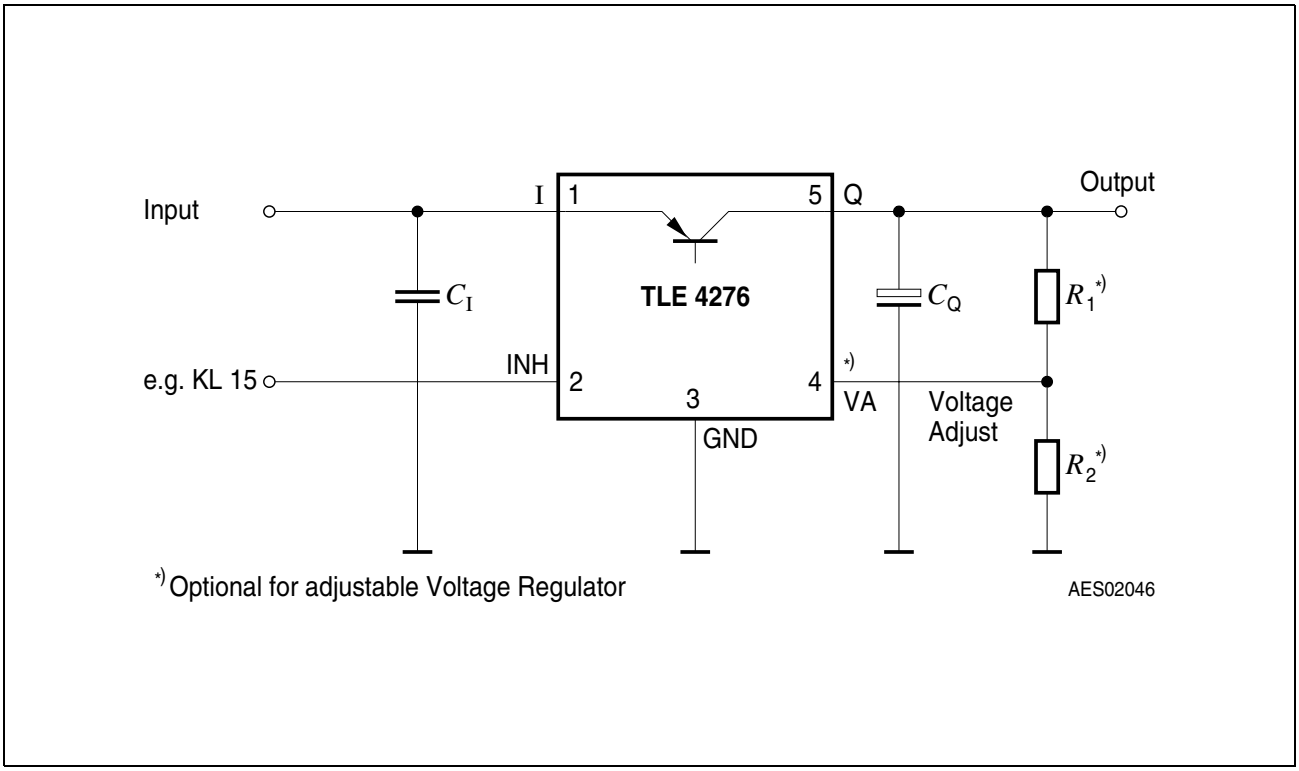

Figure 4 Application Circuit

Application Information for Variable Output Regulator TLE 4276 V, SV, DV, GV

The output voltage of the TLE 4276 V can be adjusted between 2.5 V and 20 V by an external output voltage divider, closing the control loop to the voltage adjust pin VA.

The voltage at pin VA is compared to the internal reference of typical 2.5 V in an error amplifier. It controls the output voltage.

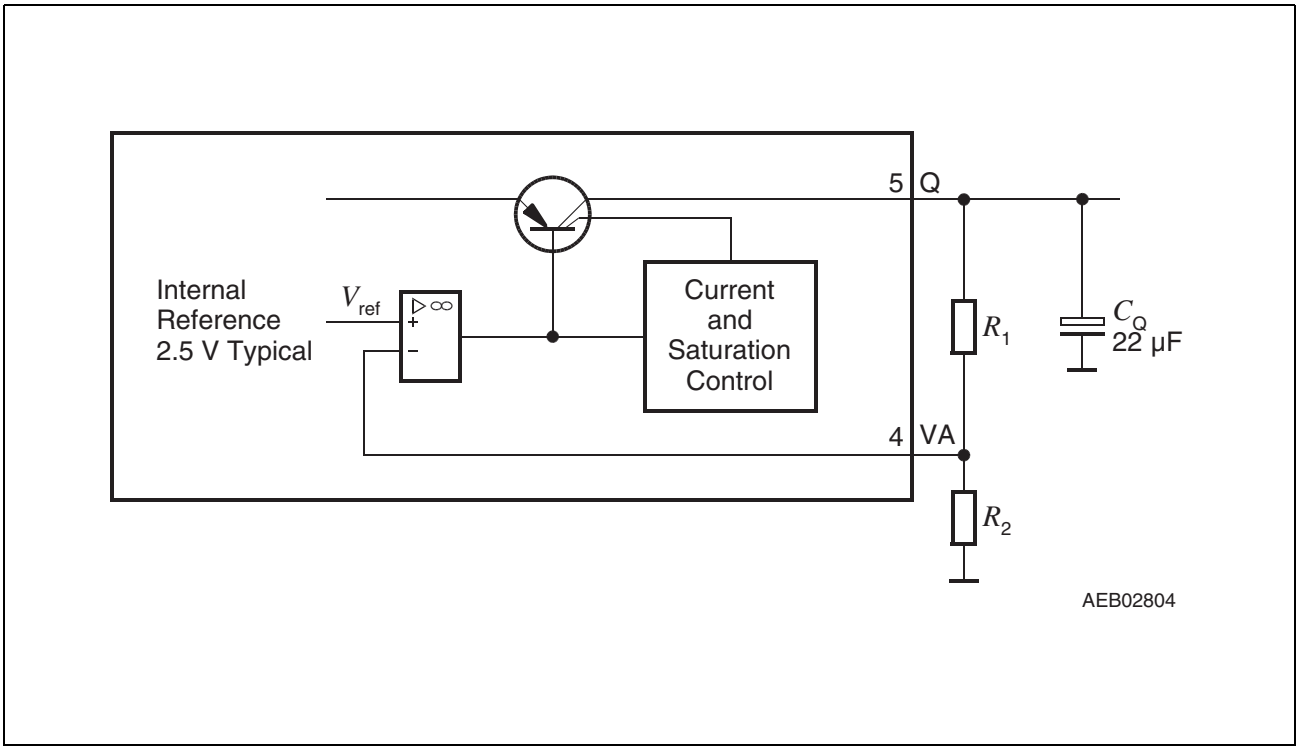

Figure 5 Application Detail External Components at Output for Variable Voltage Regulator

The output voltage is calculated according to **Equation (1)**:

$$V_Q = (R_1 + R_2)/R_2 \times V_{ref}, \text{ neglecting } I_{VA} \quad (1)$$

V_{ref} is typically 2.5 V.

To avoid errors caused by leakage current I_{VA}, we recommend to choose the resistor value R_2 according to **Equation (2)**:

$$R_2 < 50\ \text{k}\Omega \quad (2)$$

For a 2.5 V output voltage the output pin Q is directly connected to the adjust pin VA.

The accuracy of the resistors R_1 and R_2 add an additional error to the output voltage tolerance.

The operation range of the variable TLE 4276 V is V_Q + 0.5 V to 40 V. For internal biasing a minimum input voltage of 4.3 V is required. For output voltages below 4 V the voltage drop is 4.3 V - V_Q

Typical Performance Characteristics (V50, V85 and V10):

Voltage V_{DR} versus Output Current I_Q

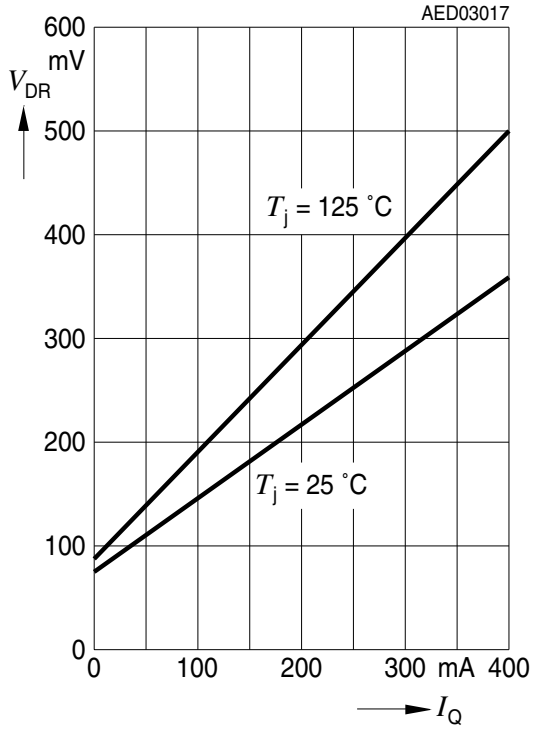

Max. Output Current I_Q versus Input Voltage V_I

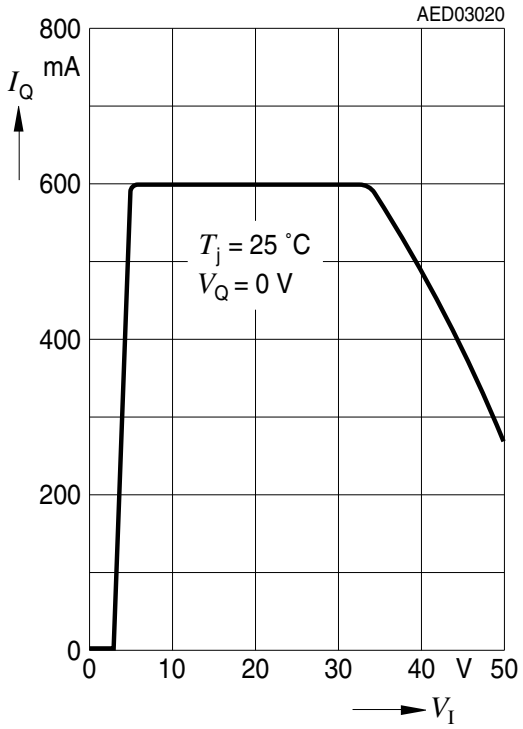

Current Consumption I_q versus Output Current I_Q (high load)

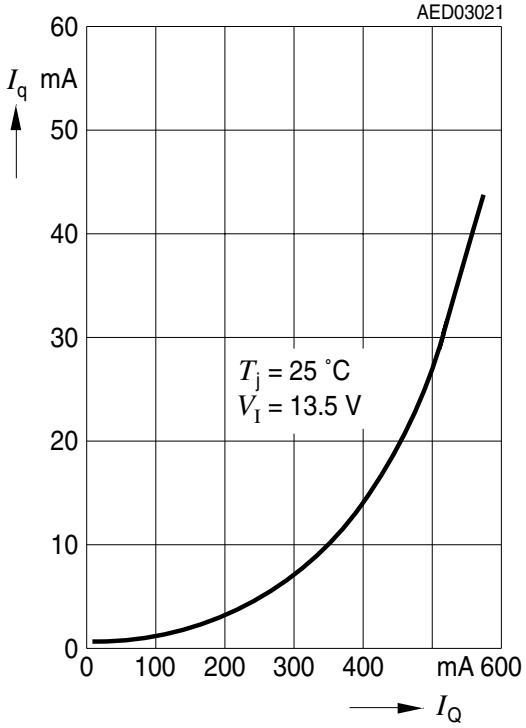

Current Consumption I_q versus Output Current I_Q (low load)

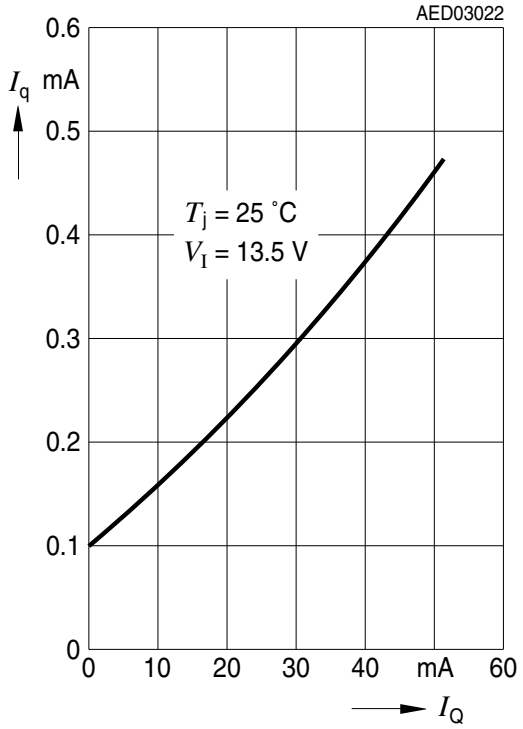

Typical Performance Characteristics for V50:

Output Voltage V_Q versus Temperature T_j

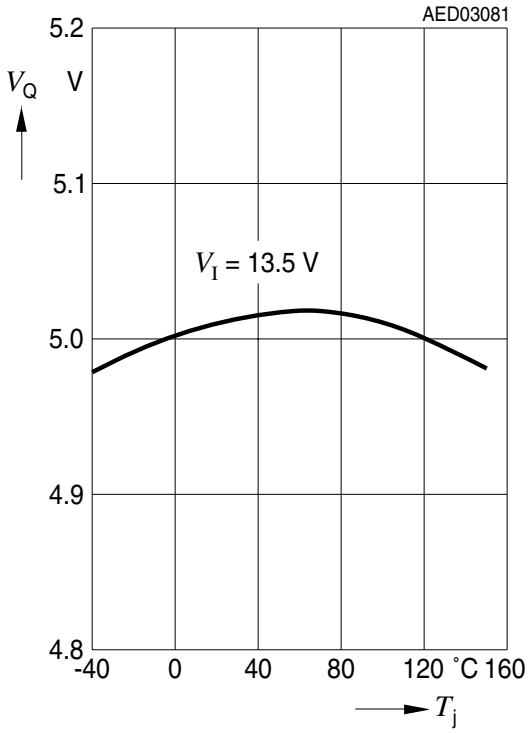

Current Consumption I_q versus Input Voltage V_I

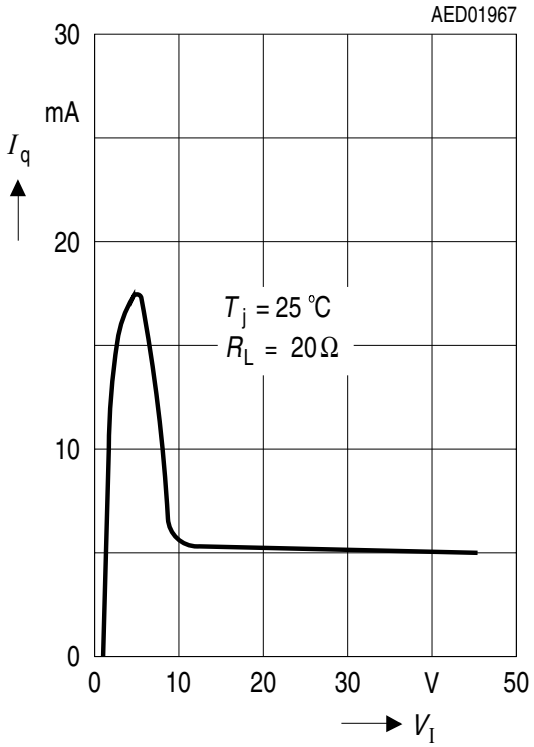

Low Voltage Behavior

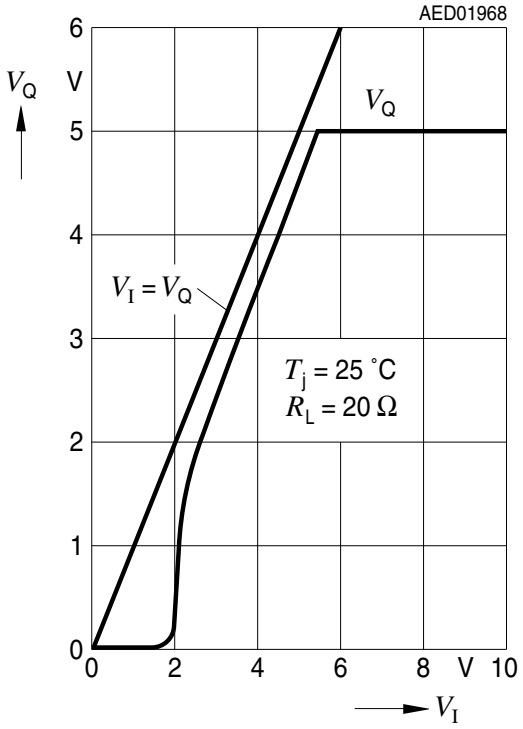

High Voltage Behavior

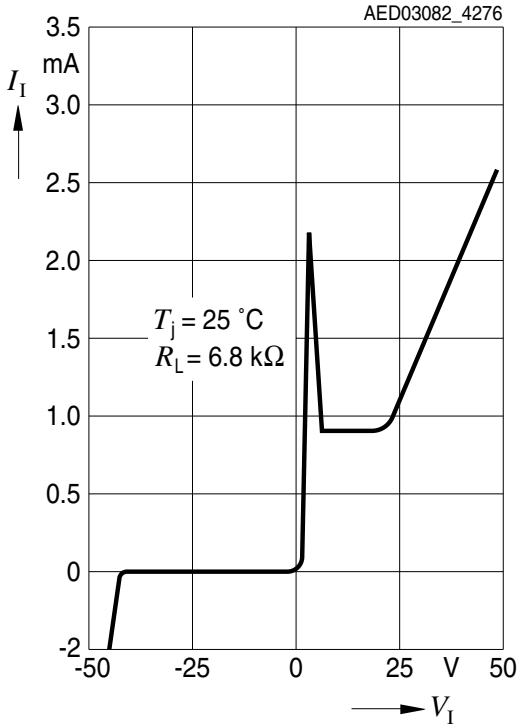

Typical Performance Characteristics for V85:

Output Voltage V_Q versus Temperature T_j

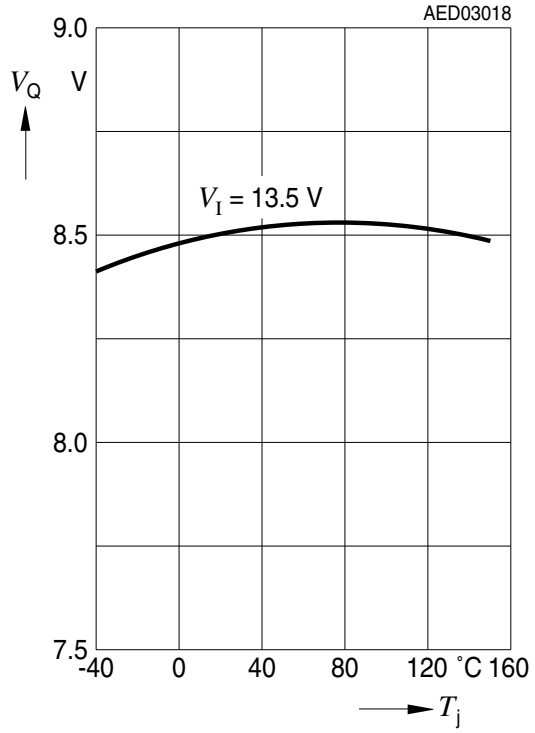

Current Consumption I_q versus Input Voltage V_I

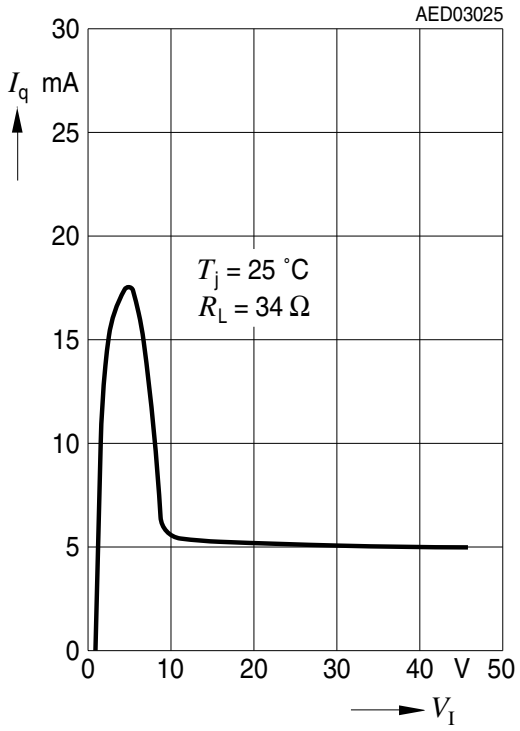

Low Voltage Behavior

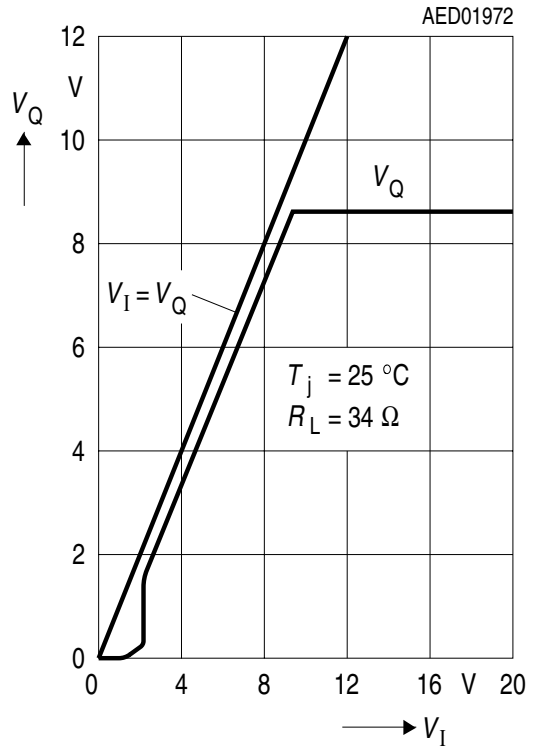

High Voltage Behavior

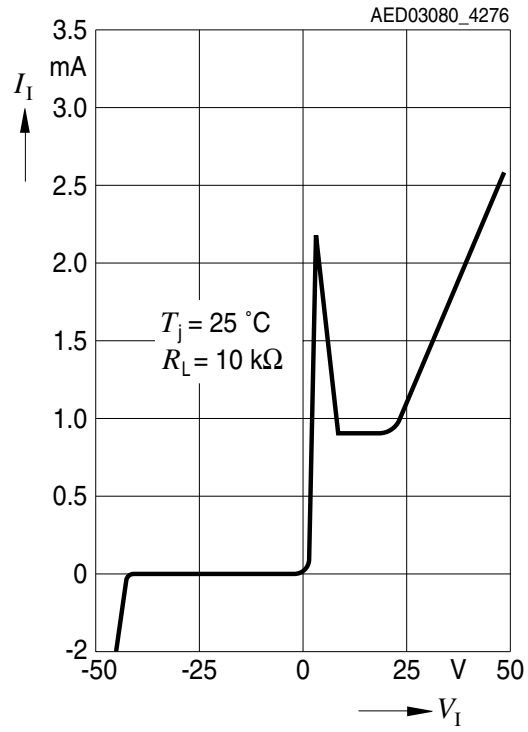

Typical Performance Characteristics for V10:

Output Voltage V_Q versus Temperature T_j

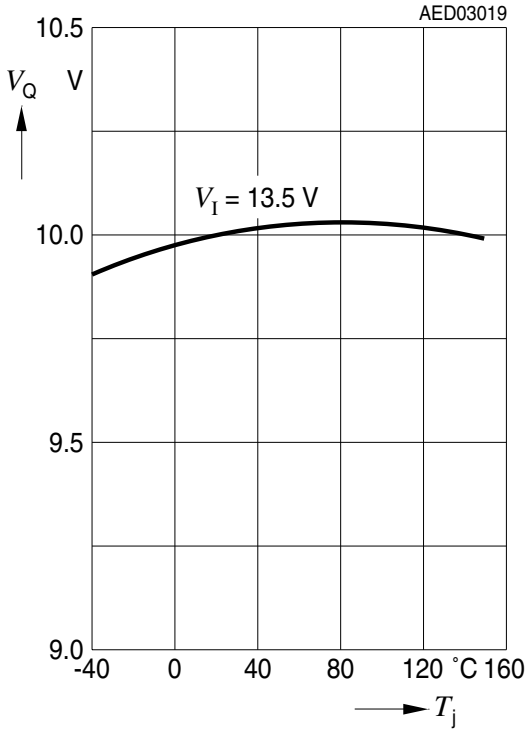

Current Consumption I_q versus Input Voltage V_I

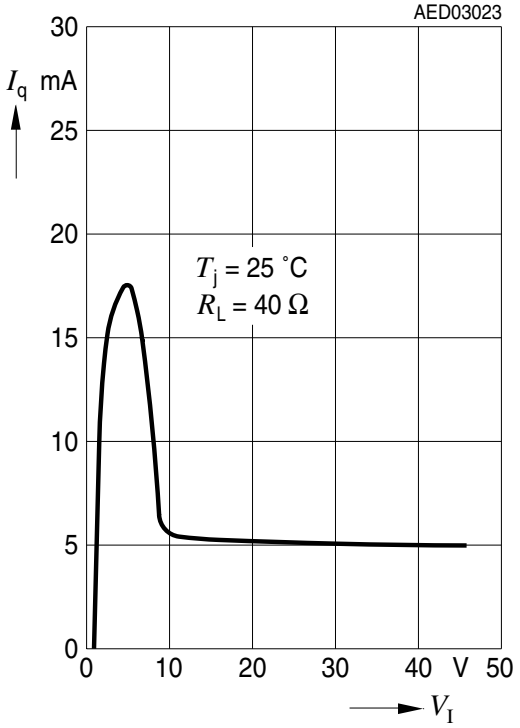

Low Voltage Behavior

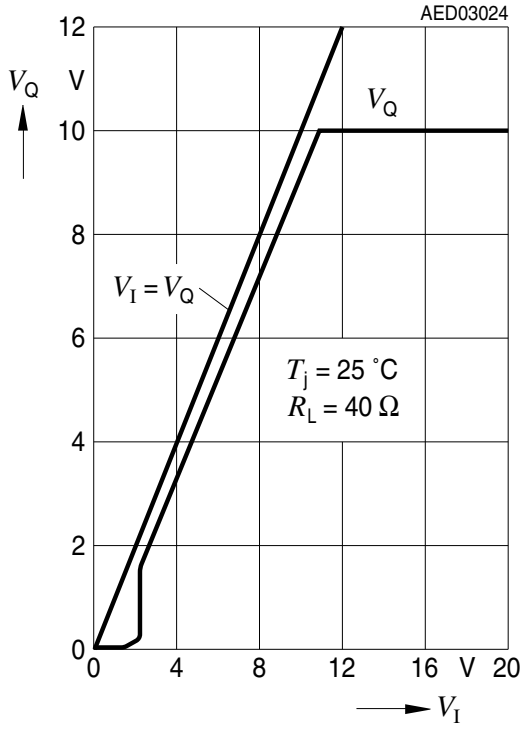

High Voltage Behavior

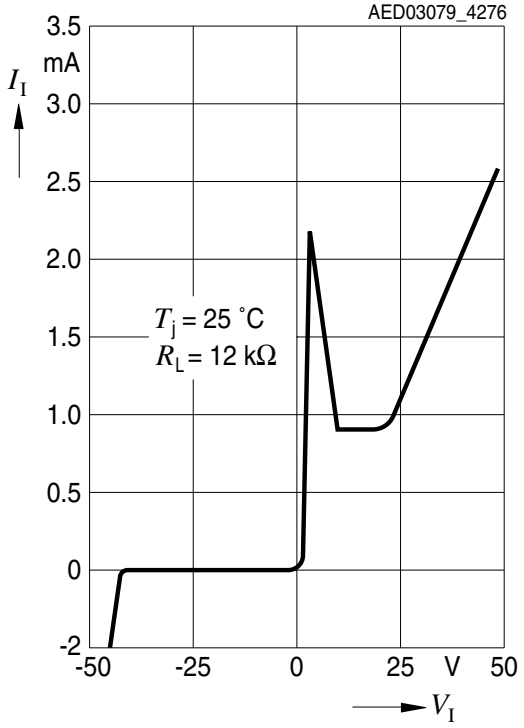

Package Outlines

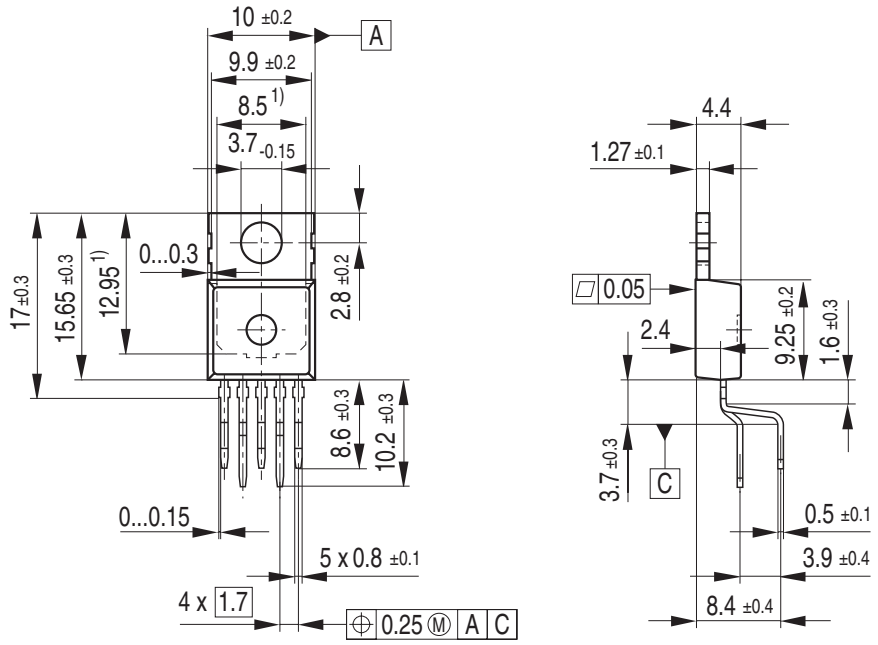

Figure 6 **PG-TO220-5-11** (Plastic Transistor Single Outline)

Green Product (RoHS compliant)

To meet the world-wide customer requirements for environmentally friendly products and to be compliant with government regulations the device is available as a green product. Green products are RoHS-Compliant (i.e Pb-free finish on leads and suitable for Pb-free soldering according to IPC/JEDEC J-STD-020).

You can find all of our packages, sorts of packing and others in our Infineon Internet Page “Products”: **http://www.infineon.com/products**.

SMD = Surface Mounted Device

Dimensions in mm

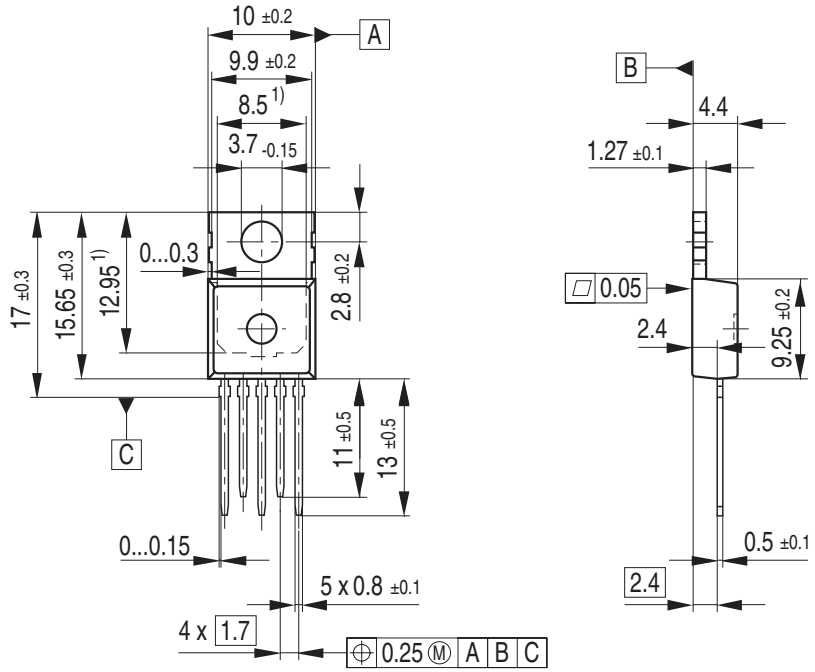

1) Typical
Metal surface min. X = 7.25, Y = 12.3
All metal surfaces tin plated, except area of cut.

GPT09065

Figure 7 **PG-TO220-5-12** (Plastic Transistor Single Outline)

Green Product (RoHS compliant)

To meet the world-wide customer requirements for environmentally friendly products and to be compliant with government regulations the device is available as a green product. Green products are RoHS-Compliant (i.e Pb-free finish on leads and suitable for Pb-free soldering according to IPC/JEDEC J-STD-020).

You can find all of our packages, sorts of packing and others in our Infineon Internet Page “Products”: **http://www.infineon.com/products**.

SMD = Surface Mounted Device

Dimensions in mm

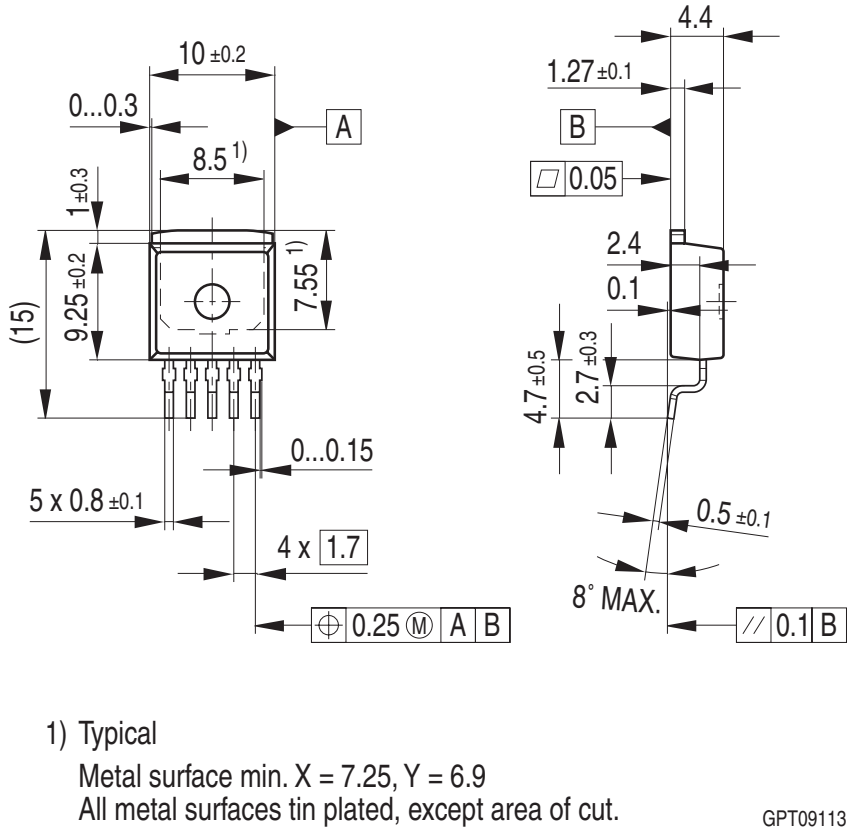

Figure 8 **PG-TO263-5-1** (Plastic Transistor Single Outline)

Green Product (RoHS compliant)

To meet the world-wide customer requirements for environmentally friendly products and to be compliant with government regulations the device is available as a green product. Green products are RoHS-Compliant (i.e Pb-free finish on leads and suitable for Pb-free soldering according to IPC/JEDEC J-STD-020).

You can find all of our packages, sorts of packing and others in our Infineon Internet Page “Products”: **http://www.infineon.com/products**.

SMD = Surface Mounted Device

Dimensions in mm

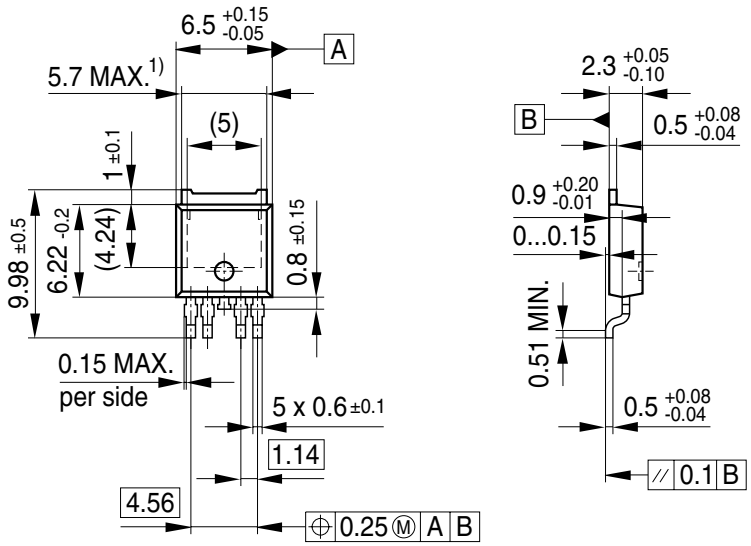

1) Includes mold flashes on each side.
All metal surfaces tin plated, except area of cut.

GPT09527

Figure 9 **PG-TO252-5-11** (Plastic Transistor Single Outline)

Green Product (RoHS compliant)

To meet the world-wide customer requirements for environmentally friendly products and to be compliant with government regulations the device is available as a green product. Green products are RoHS-Compliant (i.e Pb-free finish on leads and suitable for Pb-free soldering according to IPC/JEDEC J-STD-020).

You can find all of our packages, sorts of packing and others in our Infineon Internet Page “Products”: **http://www.infineon.com/products**.

SMD = Surface Mounted Device

Dimensions in mm

Revision History

Version	Date	Changes
Rev. 2.7	2007-10-23	**Page 17**: Corrected package outline drawing of PG-TO263-5-1
Rev. 2.6	2007-03-20	Initial version of RoHS-compliant derivate of TLE 4276 **Page 1**: AEC certified statement added **Page 1** and **Page 15**: RoHS compliance statement and Green product feature added **Page 1** and **Page 15**: Package changed to RoHS compliant version Legal Disclaimer updated
Rev. 2.5	2004-12-23	Added ESD capability information in table “Maximum Ratings”.

Edition 2007-10-23

Published by
Infineon Technologies AG
81726 Munich, Germany

© 2007 Infineon Technologies AG
All Rights Reserved.

Legal Disclaimer

The information given in this document shall in no event be regarded as a guarantee of conditions or characteristics. With respect to any examples or hints given herein, any typical values stated herein and/or any information regarding the application of the device, Infineon Technologies hereby disclaims any and all warranties and liabilities of any kind, including without limitation, warranties of non-infringement of intellectual property rights of any third party.

Information

For further information on technology, delivery terms and conditions and prices, please contact the nearest Infineon Technologies Office (**www.infineon.com**).

Warnings

Due to technical requirements, components may contain dangerous substances. For information on the types in question, please contact the nearest Infineon Technologies Office.

Infineon Technologies components may be used in life-support devices or systems only with the express written approval of Infineon Technologies, if a failure of such components can reasonably be expected to cause the failure of that life-support device or system or to affect the safety or effectiveness of that device or system. Life support devices or systems are intended to be implanted in the human body or to support and/or maintain and sustain and/or protect human life. If they fail, it is reasonable to assume that the health of the user or other persons may be endangered.