Features

- Core
  - ARM® Cortex®-M3 revision 2.0 running at up to 48 MHz
  - Thumb®-2 instruction
  - 24-bit SysTick Counter
  - Nested Vector Interrupt Controller
- Pin-to-pin compatible with SAM7S legacy products (48- and 64-pin versions) and SAM3S (48-, 64- and 100-pin versions)
- Memories
  - From 16 to 256 Kbytes embedded Flash, 128-bit wide access, memory accelerator, single plane
  - From 4 to 24 Kbytes embedded SRAM
  - 16 Kbytes ROM with embedded bootloader routines (UART) and IAP routines
- System
  - Embedded voltage regulator for single supply operation
  - Power-on-Reset (POR), Brown-out Detector (BOD) and Watchdog for safe operation
  - Quartz or ceramic resonator oscillators: 3 to 20 MHz main power with Failure Detection and optional low power 32.768 kHz for RTC or device clock
  - High precision 8/12 MHz factory trimmed internal RC oscillator with 4 MHz default frequency for device startup. In-application trimming access for frequency adjustment
  - Slow Clock Internal RC oscillator as permanent low-power mode device clock
  - One PLL up to 130 MHz for device clock
  - Up to 10 peripheral DMA (PDC) channels
- Low Power Modes
  - Sleep and Backup modes, down to 3 µA in Backup mode
  - Ultra low power RTC
- Peripherals
  - Up to 2 USARTs with RS-485 and SPI mode support. One USART (USART0) has ISO7816, IrDA® and PDC support in addition
  - Two 2-wire UARTs
  - 2 Two Wire Interface (I2C compatible), 1 SPI
  - Up to 6 Three-Channel 16-bit Timer/Counter with capture, waveform, compare and PWM mode. Quadrature Decoder Logic and 2-bit Gray Up/Down Counter for Stepper Motor
  - 4-channel 16-bit PWM
  - 32-bit Real-time Timer and RTC with calendar and alarm features
  - Up to 16 channels, 384 KSPS 10-bit ADC
  - One 500 KSPS 10-bit DAC
- I/O
  - Up to 79 I/O lines with external interrupt capability (edge or level sensitivity), debouncing, glitch filtering and on-die Series Resistor Termination
  - Three 32-bit Parallel Input/Output Controllers
- Packages
  - 100-lead LQFP, 14 x 14 mm, pitch 0.5 mm/100-ball TFBGA, 9 x 9 mm, pitch 0.8 mm
  - 64-lead LQFP, 10 x 10 mm, pitch 0.5 mm/64-pad QFN 9x9 mm, pitch 0.5 mm
  - 48-lead LQFP, 7 x 7 mm, pitch 0.5 mm/48-pad QFN 7x7 mm, pitch 0.5 mm

AT91SAM ARM-based Flash MCU

SAM3N Series

Summary

11011BS–ATARM–22-Feb-12

1. SAM3N Description

Atmel's SAM3N series is a member of a family of Flash microcontrollers based on the high performance 32-bit ARM Cortex-M3 RISC processor. It operates at a maximum speed of 48 MHz and features up to 256 Kbytes of Flash and up to 24 Kbytes of SRAM. The peripheral set includes 2x USARTs, 2x UARTs, 2x TWIs, 3x SPI, as well as 1 PWM timer, 6x general purpose 16-bit timers, an RTC, a 10-bit ADC and a 10-bit DAC.

The SAM3N series is ready for capacitive touch thanks to the QTouch library, offering an easy way to implement buttons, wheels and sliders.

The SAM3N device is an entry-level general purpose microcontroller. That makes the SAM3N the ideal starting point to move from 8- /16-bit to 32-bit microcontrollers.

It operates from 1.62V to 3.6V and is available in 48-pin, 64-pin and 100-pin QFP, 48-pin and 64-pin QFN, and 100-pin BGA packages.

The SAM3N series is the ideal migration path from the SAM3S for applications that require a reduced BOM cost. The SAM3N series is pin-to-pin compatible with the SAM3S series. Its aggressive price point and high level of integration pushes its scope of use far into cost-sensitive, high-volume applications.

1.1 Configuration Summary

The SAM3N4/2/1/0/00 differ in memory size, package and features list. Table 1-1 summarizes the configurations of the 9 devices.

Table 1-1. Configuration Summary

Device	Flash	SRAM	Package	Number of PIOs	ADC	Timer	PDC Channels	USART	DAC
SAM3N4A	256 Kbytes	24 Kbytes	LQFP48 QFN48	34	8 channels	6[(1)]	8	1	_
SAM3N4B	256 Kbytes	24 Kbytes	LQFP64 QFN64	47	10 channels	6[(2)]	10	2	1
SAM3N4C	256 Kbytes	24 Kbytes	LQFP100 BGA100	79	16 channels	6	10	2	1
SAM3N2A	128 Kbytes	16 Kbytes	LQFP48 QFN48	34	8 channels	6[(1)]	8	1	_
SAM3N2B	128 Kbytes	16 Kbytes	LQFP64 QFN64	47	10 channels	6([(2)]	10	2	1
SAM3N2C	128 Kbytes	16 Kbytes	LQFP100 BGA100	79	16 channels	6	10	2	1
SAM3N1A	64 Kbytes	8 Kbytes	LQFP48 QFN48	34	8 channels	6[(1)]	8	1	_
SAM3N1B	64 Kbytes	8 Kbytes	LQFP64 QFN64	47	10 channels	6[(2)]	10	2	1
SAM3N1C	64 Kbytes	8 Kbytes	LQFP100 BGA100	79	16 channels	6	10	2	1
SAM3N0A	32 Kbytes	8 Kbytes	LQFP48 QFN48	34	8 channels	6[(1)]	8	1	_
SAM3N0B	32 Kbytes	8 Kbytes	LQFP64 QFN64	47	10 channels	6[(2)]	10	2	1
SAM3N0C	32 Kbytes	8 Kbytes	LQFP100 BGA100	79	16 channels	6	10	2	1
SAM3N00A	16 Kbytes	4 KBytes	LQFP48 QFN48	34	8 channels	6[(1)]	8	1	_
SAM3N00B	16 Kbytes	4 KBytes	LQFP64 QFN64	47	10 channels	6[(2)]	10	2	1

Notes: 1. Only two TC channels are accessible through the PIO.
2. Only three TC channels are accessible through the PIO.

2. SAM3N Block Diagram

Figure 2-1. SAM3N 100-pin version Block Diagram

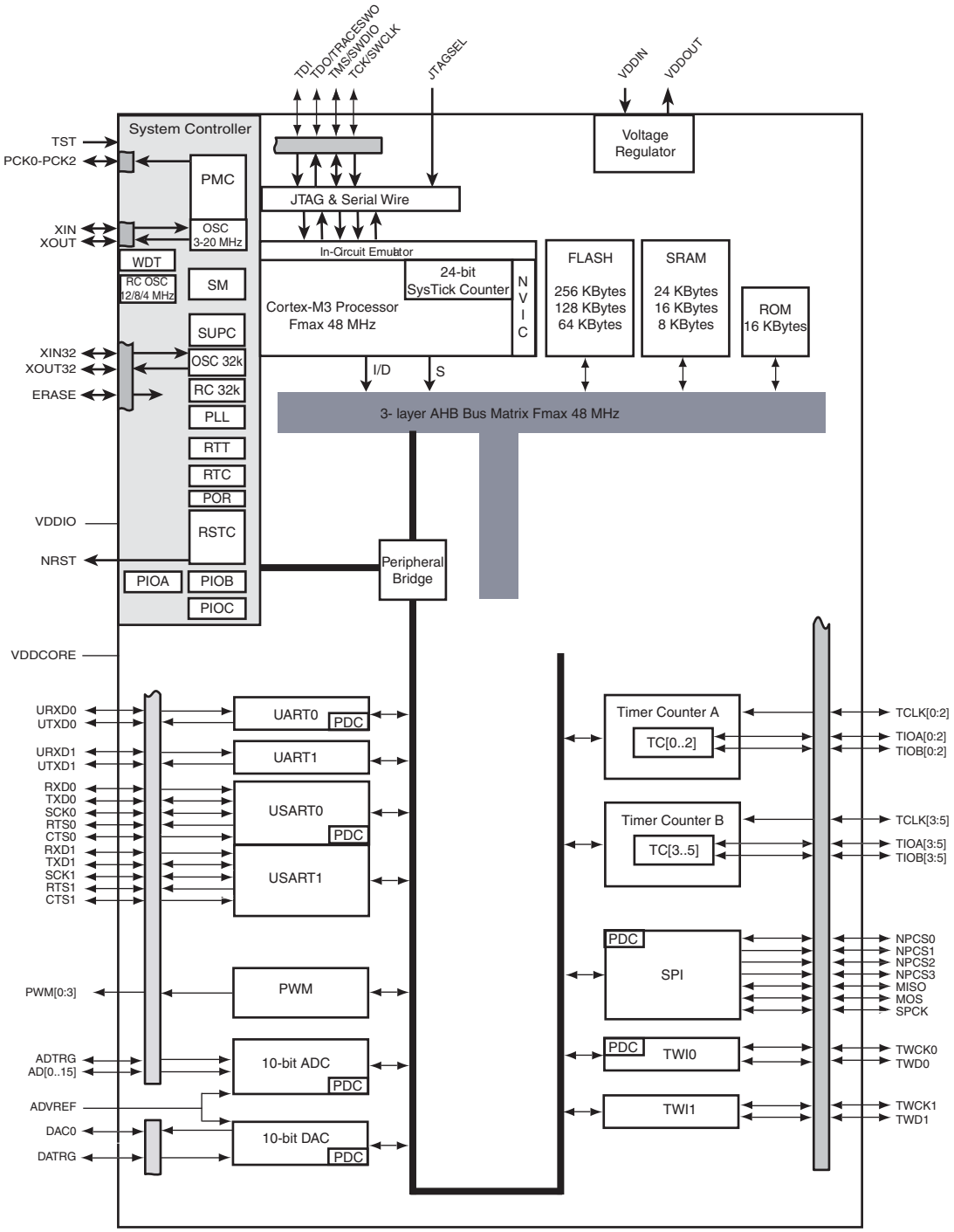

Figure 2-2. SAM3N 64-pin version Block Diagram

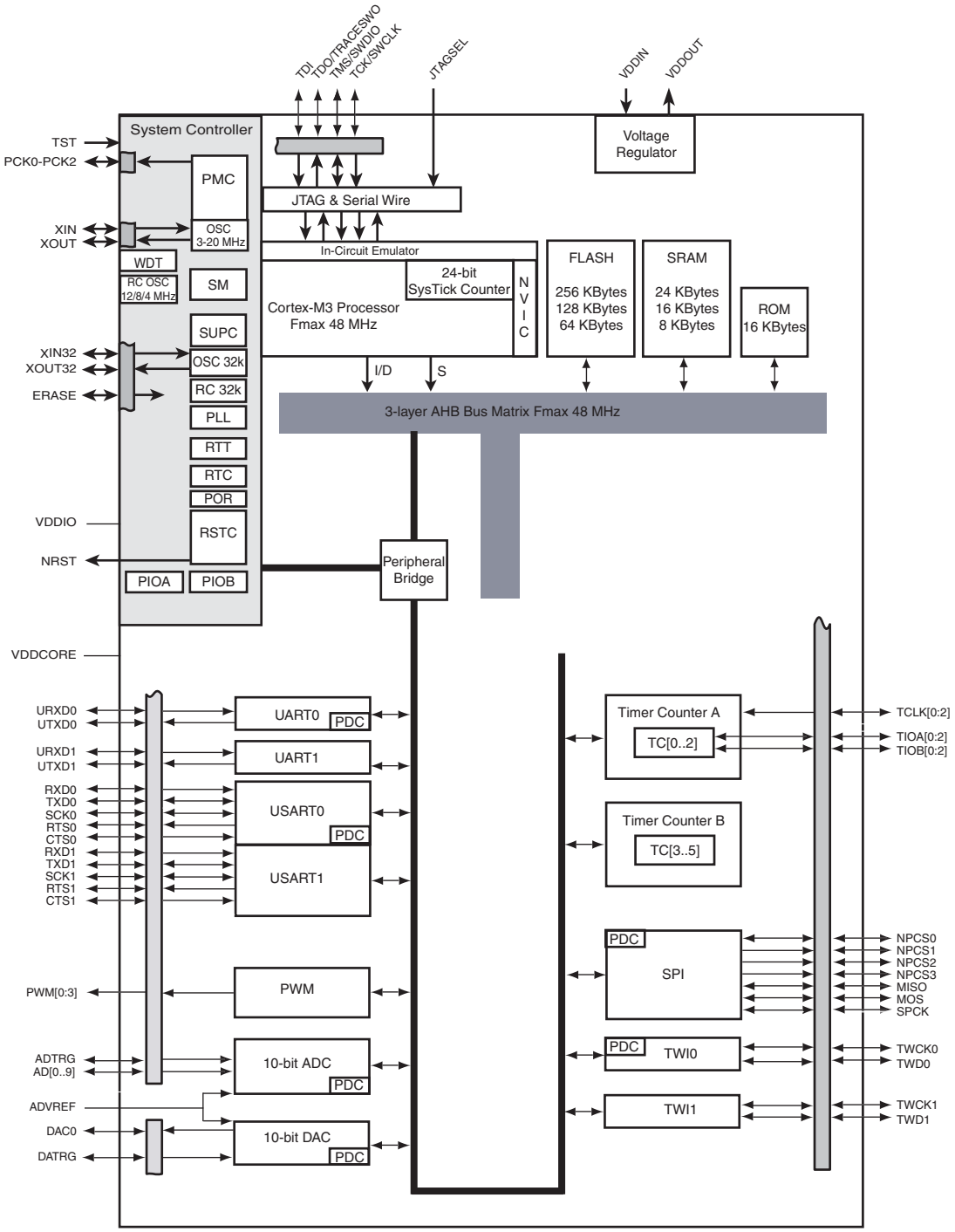

Figure 2-3. SAM3N 48-pin version Block Diagramz

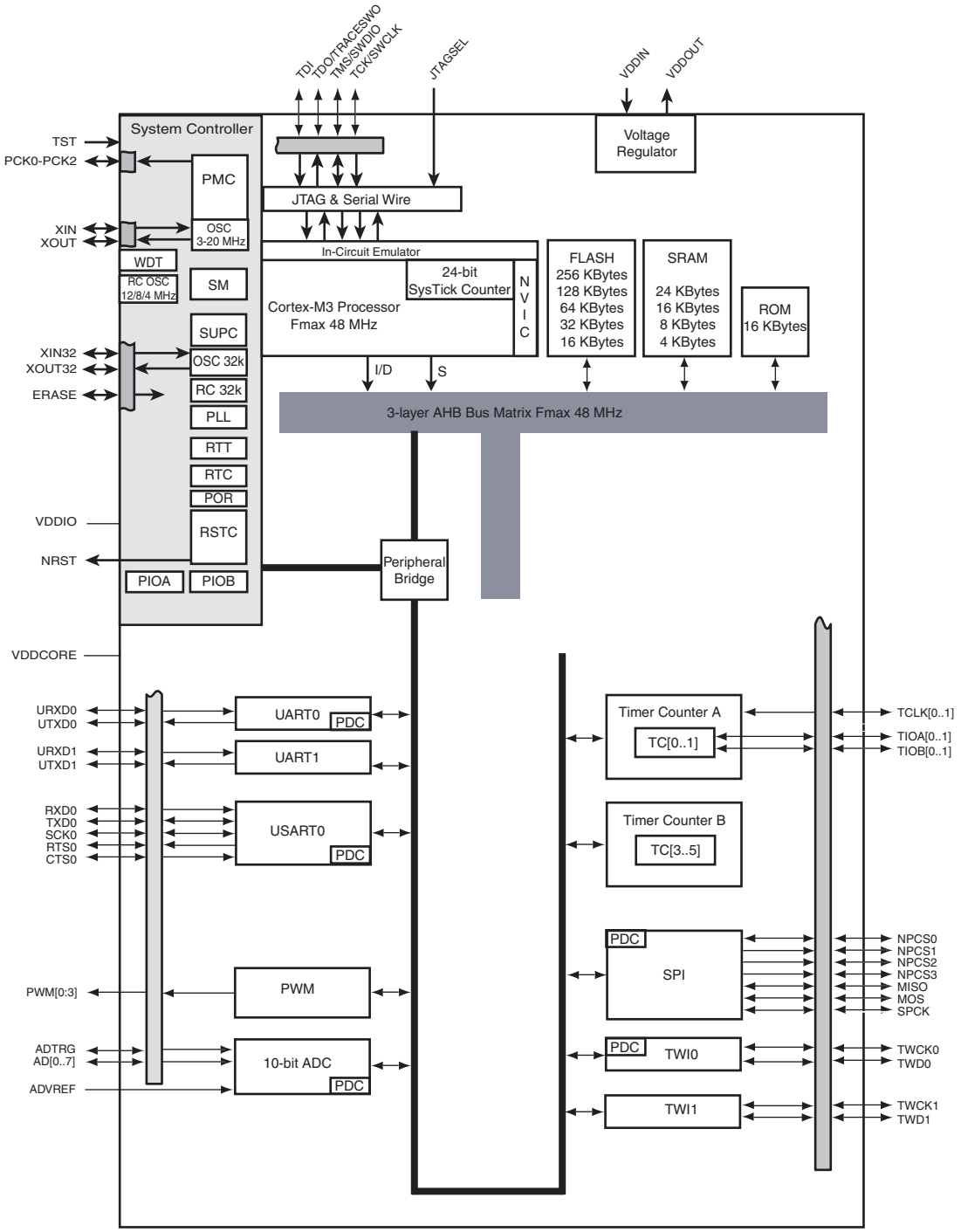

3. Signal Description

Table 3-1 gives details on the signal name classified by peripheral.

Table 3-1. Signal Description List

Signal Name	Function	Type	Active Level	Voltage Reference	Comments
Power Supplies					
VDDIO	Peripherals I/O Lines Power Supply	Power			1.62V to 3.6V
VDDIN	Voltage Regulator, ADC and DAC Power Supply	Power			1.8V to 3.6V[3]
VDDOUT	Voltage Regulator Output	Power			1.8V Output
VDDPLL	Oscillator and PLL Power Supply	Power			1.65 V to 1.95V
VDDCORE	Power the core, the embedded memories and the peripherals	Power			1.65V to 1.95V Connected externally to VDDOUT
GND	Ground	Ground			
Clocks, Oscillators and PLLs					
XIN	Main Oscillator Input	Input		VDDIO	Reset State: - PIO Input - Internal Pull-up disabled - Schmitt Trigger enabled[1]
XOUT	Main Oscillator Output	Output			
XIN32	Slow Clock Oscillator Input	Input			
XOUT32	Slow Clock Oscillator Output	Output			
PCK0 - PCK2	Programmable Clock Output	Output			Reset State: - PIO Input - Internal Pull-up enabled - Schmitt Trigger enabled[1]
ICE and JTAG					
TCK/SWCLK	Test Clock/Serial Wire Clock	Input		VDDIO	Reset State: - SWJ-DP Mode - Internal pull-up disabled - Schmitt Trigger enabled[1]
TDI	Test Data In	Input			
TDO/TRACESWO	Test Data Out/Trace Asynchronous Data Out	Output			
TMS/SWDIO	Test Mode Select /Serial Wire Input/Output	Input / I/O			
JTAGSEL	JTAG Selection	Input	High		Permanent Internal pull-down

Table 3-1. Signal Description List (Continued)

Signal Name	Function	Type	Active Level	Voltage Reference	Comments
Flash Memory					
ERASE	Flash and NVM Configuration Bits Erase Command	Input	High	VDDIO	Reset State: - Erase Input - Internal pull-down enabled - Schmitt Trigger enabled[1]
Reset/Test					
NRST	Microcontroller Reset	I/O	Low	VDDIO	Permanent Internal pull-up
TST	Test Mode Select	Input		VDDIO	Permanent Internal pull-down
Universal Asynchronous Receiver Transceiver - UARTx					
URXDx	UART Receive Data	Input			
UTXDx	UART Transmit Data	Output			
PIO Controller - PIOA - PIOB - PIOC					
PA0 - PA31	Parallel IO Controller A	I/O		VDDIO	Reset State: - PIO or System IOs[2] - Internal pull-up enabled - Schmitt Trigger enabled[1]
PB0 - PB14	Parallel IO Controller B	I/O			
PC0 - PC31	Parallel IO Controller C	I/O			
Universal Synchronous Asynchronous Receiver Transmitter USARTx					
SCKx	USARTx Serial Clock	I/O			
TXDx	USARTx Transmit Data	I/O			
RXDx	USARTx Receive Data	Input			
RTSx	USARTx Request To Send	Output			
CTSx	USARTx Clear To Send	Input			
Timer/Counter - TC					
TCLKx	TC Channel x External Clock Input	Input			
TIOAx	TC Channel x I/O Line A	I/O			
TIOBx	TC Channel x I/O Line B	I/O			
Pulse Width Modulation Controller- PWMC					
PWMx	PWM Waveform Output for channel x	Output			

Table 3-1. Signal Description List (Continued)

Signal Name	Function	Type	Active Level	Voltage Reference	Comments
Serial Peripheral Interface - SPI					
MISO	Master In Slave Out	I/O			
MOSI	Master Out Slave In	I/O			
SPCK	SPI Serial Clock	I/O			
SPI_NPCS0	SPI Peripheral Chip Select 0	I/O	Low		
SPI_NPCS1 - SPI_NPCS3	SPI Peripheral Chip Select	Output	Low		
Two-Wire Interface- TWIx					
TWDx	TWIx Two-wire Serial Data	I/O			
TWCKx	TWIx Two-wire Serial Clock	I/O			
Analog					
ADVREF	ADC and DAC Reference	Analog			
10-bit Analog-to-Digital Converter - ADC					
AD0 - AD15	Analog Inputs	Analog			
ADTRG	ADC Trigger	Input		VDDIO	
Digital-to-Analog Converter Controller- DACC					
DAC0	DACC channel analog output	Analog			
DATRG	DACC Trigger	Input		VDDIO	
Fast Flash Programming Interface					
PGMEN0-PGMEN2	Programming Enabling	Input		VDDIO	
PGMM0-PGMM3	Programming Mode	Input			
PGMD0-PGMD15	Programming Data	I/O			
PGMRDY	Programming Ready	Output	High		
PGMNVALID	Data Direction	Output	Low		
PGMNOE	Programming Read	Input	Low		
PGMCK	Programming Clock	Input			
PGMNCMD	Programming Command	Input	Low		

Notes:
1. Schmitt Triggers can be disabled through PIO registers.
2. Some PIO lines are shared with System IOs.
3. See Section 5.3 “Typical Powering Schematics” for restriction on voltage range of Analog Cells.

4. Package and Pinout

SAM3N4/2/1/0/00 series is pin-to-pin compatible with SAM3S products. Furthermore SAM3N4/2/1/0/00 devices have new functionalities referenced in italic inTable 4-1, Table 4-3 and Table 4-4.

4.1 SAM3N4/2/1/0/00C Package and Pinout

4.1.1 100-lead LQFP Package Outline

Figure 4-1. Orientation of the 100-lead LQFP Package

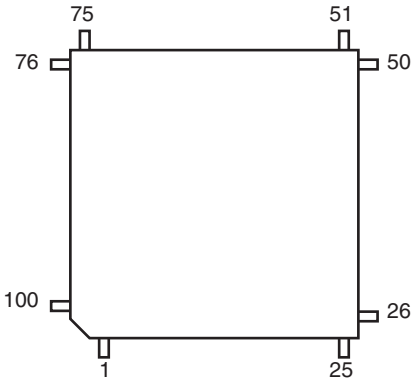

4.1.2 100-ball TFBGA Package Outline

The 100-Ball TFBGA package has a 0.8 mm ball pitch and respects Green Standards. Its dimensions are 9 x 9 x 1.1 mm.

Figure 4-2. Orientation of the 100-ball TFBGA Package

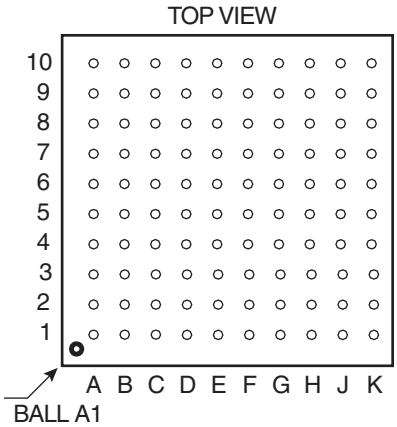

4.1.3 100-Lead LQFP Pinout

Table 4-1. 100-lead LQFP SAM3N4/2/1/0/00C Pinout

1	ADVREF	26	GND	51	TDI/PB4	76	TDO/TRACESWO/PB5
2	GND	27	VDDIO	52	PA6/PGMNOE	77	JTAGSEL
3	PB0/AD4	28	PA16/PGMD4	53	PA5/PGMRDY	78	PC18
4	PC29/AD13	29	PC7	54	PC28	79	TMS/SWDIO/PB6
5	PB1/AD5	30	PA15/PGMD3	55	PA4/PGMNCMD	80	PC19
6	PC30/AD14	31	PA14/PGMD2	56	VDDCORE	81	PA31
7	PB2/AD6	32	PC6	57	PA27	82	PC20
8	PC31/AD15	33	PA13/PGMD1	58	PC8	83	TCK/SWCLK/PB7
9	PB3/AD7	34	PA24	59	PA28	84	PC21
10	VDDIN	35	PC5	60	NRST	85	VDDCORE
11	VDDOUT	36	VDDCORE	61	TST	86	PC22
12	PA17/PGMD5/AD0	37	PC4	62	PC9	87	ERASE/PB12
13	PC26	38	PA25	63	PA29	88	PB10
14	PA18/PGMD6/AD1	39	PA26	64	PA30	89	PB11
15	PA21/AD8	40	PC3	65	PC10	90	PC23
16	VDDCORE	41	PA12/PGMD0	66	PA3	91	VDDIO
17	PC27	42	PA11/PGMM3	67	PA2/PGMEN2	92	PC24
18	PA19/PGMD7/AD2	43	PC2	68	PC11	93	PB13/DAC0
19	PC15/AD11	44	PA10/PGMM2	69	VDDIO	94	PC25
20	PA22/AD9	45	GND	70	GND	95	GND
21	PC13/AD10	46	PA9/PGMM1	71	PC14	96	PB8/XOUT
22	PA23	47	PC1	72	PA1/PGMEN1	97	PB9/*PGMCK/XIN*
23	PC12/AD12	48	PA8/XOUT32/ PGMM0	73	PC16	98	VDDIO
24	PA20/AD3	49	PA7/XIN32/ PGMNVALID	74	PA0/PGMEN0	99	PB14
25	PC0	50	VDDIO	75	PC17	100	VDDPLL

4.1.4 100-ball TFBGA Pinout

Table 4-2. 100-ball TFBGA SAM3N4/2/1/0/00C Pinout

A1	PB1	C6	PB7	F1	PA18	H6	PC4
A2	PC29	C7	PC16	F2	PC26	H7	PA11
A3	VDDIO	C8	PA1	F3	VDDOUT	H8	PC1
A4	PB9	C9	PC17	F4	GND	H9	PA6
A5	PB8	C10	PA0	F5	VDDIO	H10	PB4
A6	PB13	D1	PB3	F6	PA27	J1	PC15
A7	PB11	D2	PB0	F7	PC8	J2	PC0
A8	PB10	D3	PC24	F8	PA28	J3	PA16
A9	PB6	D4	PC22	F9	TST	J4	PC6
A10	JTAGSEL	D5	GND	F10	PC9	J5	PA24
B1	PC30	D6	GND	G1	PA21	J6	PA25
B2	ADVREF	D7	VDDCORE	G2	PC27	J7	PA10
B3	GNDANA	D8	PA2	G3	PA15	J8	GND
B4	PB14	D9	PC11	G4	VDDCORE	J9	VDDCORE
B5	PC21	D10	PC14	G5	VDDCORE	J10	VDDIO
B6	PC20	E1	PA17	G6	PA26	K1	PA22
B7	PA31	E2	PC31	G7	PA12	K2	PC13
B8	PC19	E3	VDDIN	G8	PC28	K3	PC12
B9	PC18	E4	GND	G9	PA4	K4	PA20
B10	PB5	E5	GND	G10	PA5	K5	PC5
C1	PB2	E6	NRST	H1	PA19	K6	PC3
C2	VDDPLL	E7	PA29	H2	PA23	K7	PC2
C3	PC25	E8	PA30	H3	PC7	K8	PA9
C4	PC23	E9	PC10	H4	PA14	K9	PA8
C5	PB12	E10	PA3	H5	PA13	K10	PA7

4.2 SAM3N4/2/1/0/00B Package and Pinout

Figure 4-3. Orientation of the 64-pad QFN Package

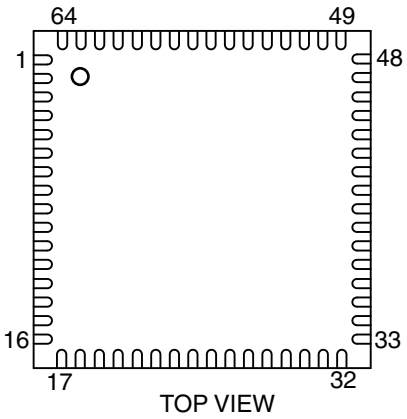

Figure 4-4. Orientation of the 64-lead LQFP Package

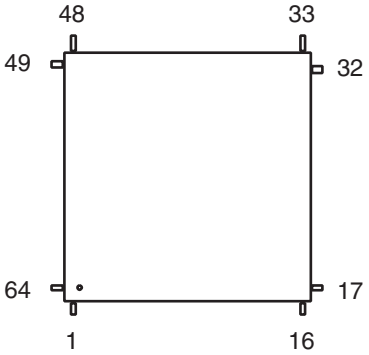

4.2.1 64-Lead LQFP and QFN Pinout

64-pin version SAM3N devices are pin-to-pin compatible with SAM3S products. Furthermore, SAM3N products have new functionalities shown in italic in Table 4-3.

Table 4-3. 64-pin SAM3N4/2/1/0/00B Pinout

1	ADVREF	17	GND	33	*TDI/PB4*	49	*TDO/TRACESWO/PB5*
2	GND	18	VDDIO	34	PA6/PGMNOE	50	JTAGSEL
3	*PB0/AD4*	19	PA16/PGMD4	35	PA5/PGMRDY	51	*TMS/SWDIO/PB6*
4	*PB1AD5*	20	PA15/PGMD3	36	PA4/PGMNCMD	52	PA31
5	*PB2/AD6*	21	PA14/PGMD2	37	PA27/PGMD15	53	*TCK/SWCLK/PB7*
6	*PB3/AD7*	22	PA13/PGMD1	38	PA28	54	VDDCORE
7	VDDIN	23	PA24/PGMD12	39	NRST	55	*ERASE/PB12*
8	VDDOUT	24	VDDCORE	40	TST	56	*PB10*
9	PA17/PGMD5/AD0	25	PA25/PGMD13	41	PA29	57	*PB11*
10	PA18/PGMD6/AD1	26	PA26/PGMD14	42	PA30	58	VDDIO
11	PA21/PGMD9/AD8	27	PA12/PGMD0	43	PA3	59	*PB13/DAC0*
12	VDDCORE	28	PA11/PGMM3	44	PA2/PGMEN2	60	GND
13	PA19/PGMD7/AD2	29	PA10/PGMM2	45	VDDIO	61	*XOUT/PB8*
14	PA22/PGMD10/AD9	30	PA9/PGMM1	46	GND	62	*XIN/PGMCK/PB9*
15	PA23/PGMD11	31	PA8/XOUT32/PGMM 0	47	PA1/PGMEN1	63	*PB14*
16	PA20/PGMD8/AD3	32	PA7/XIN32/XOUT32/ PGMNVALID	48	PA0/PGMEN0	64	VDDPLL

Note: The bottom pad of the QFN package must be connected to ground.

4.3 SAM3N4/2/1/0/00A Package and Pinout

Figure 4-5. Orientation of the 48-pad QFN Package

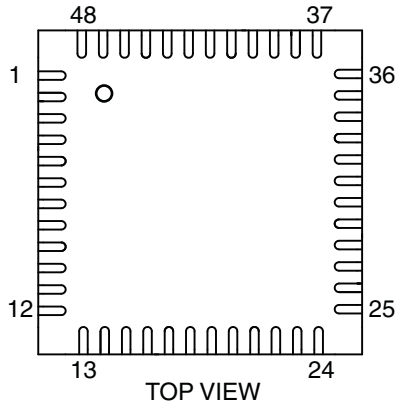

Figure 4-6. Orientation of the 48-lead LQFP Package

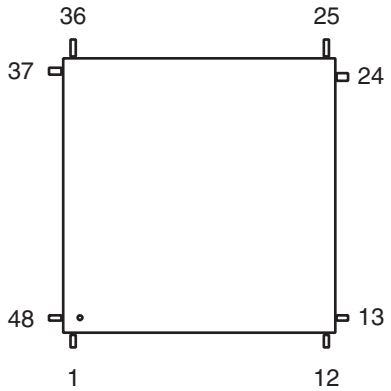

4.3.1 48-Lead LQFP and QFN Pinout

Table 4-4. 48-pin SAM3N4/2/1/0/00A Pinout

1	ADVREF	13	VDDIO	25	*TDI/PB4*	37	*TDO/TRACESWO/ PB5*
2	GND	14	PA16/PGMD4	26	PA6/PGMNOE	38	JTAGSEL
3	*PB0/AD4*	15	PA15/PGMD3	27	PA5/PGMRDY	39	*TMS/SWDIO/PB6*
4	*PB1/AD5*	16	PA14/PGMD2	28	PA4/PGMNCMD	40	*TCK/SWCLK/PB7*
5	*PB2/AD6*	17	PA13/PGMD1	29	NRST	41	VDDCORE
6	*PB3/AD7*	18	VDDCORE	30	TST	42	*ERASE/PB12*
7	VDDIN	19	PA12/PGMD0	31	PA3	43	*PB10*
8	VDDOUT	20	PA11/PGMM3	32	PA2/PGMEN2	44	*PB11*
9	PA17/PGMD5/AD0	21	PA10/PGMM2	33	VDDIO	45	*XOUT/PB8*
10	PA18/PGMD6/AD1	22	PA9/PGMM1	34	GND	46	*XIN/P/PB9/GMCK*
11	PA19/PGMD7/AD2	23	PA8/XOUT32/PG MM0	35	PA1/PGMEN1	47	VDDIO
12	PA20/AD3	24	PA7/XIN32/PGMN VALID	36	PA0/PGMEN0	48	VDDPLL

Note: The bottom pad of the QFN package must be connected to ground.

5. Power Considerations

5.1 Power Supplies

The SAM3N product has several types of power supply pins:

- VDDCORE pins: Power the core, including the processor, the embedded memories and the peripherals. Voltage ranges from 1.62V and 1.95V.
- VDDIO pins: Power the Peripherals I/O lines, Backup part, 32 kHz crystal oscillator and oscillator pads. Voltage ranges from 1.62V and 3.6V
- VDDIN pin: Voltage Regulator, ADC and DAC Power Supply. Voltage ranges from 1.8V to 3.6V for the Voltage Regulator
- VDDPLL pin: Powers the PLL, the Fast RC and the 3 to 20 MHz oscillators. Voltage ranges from 1.62V and 1.95V.

5.2 Voltage Regulator

The SAM3N embeds a voltage regulator that is managed by the Supply Controller.

This internal regulator is intended to supply the internal core of SAM3N. It features two different operating modes:

- In Normal mode, the voltage regulator consumes less than 700 µA static current and draws 60 mA of output current. Internal adaptive biasing adjusts the regulator quiescent current depending on the required load current. In Wait Mode quiescent current is only 7 µA.
- In Backup mode, the voltage regulator consumes less than 1 µA while its output (VDDOUT) is driven internally to GND. The default output voltage is 1.80V and the start-up time to reach Normal mode is less than100 µs.

For adequate input and output power supply decoupling/bypassing, refer to the Voltage Regulator section in the Electrical Characteristics section of the datasheet.

5.3 Typical Powering Schematics

The SAM3N supports a 1.62V-3.6V single supply mode. The internal regulator input connected to the source and its output feeds VDDCORE. Figure 5-1 shows the power schematics.

As VDDIN powers the voltage regulator and the ADC/DAC, when the user does not want to use the embedded voltage regulator, it can be disabled by software via the SUPC (note that it is different from Backup mode).

Figure 5-1. Single Supply

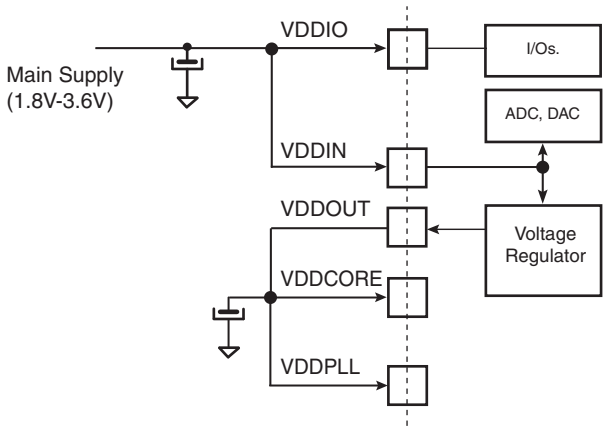

Figure 5-2. Core Externally Supplied

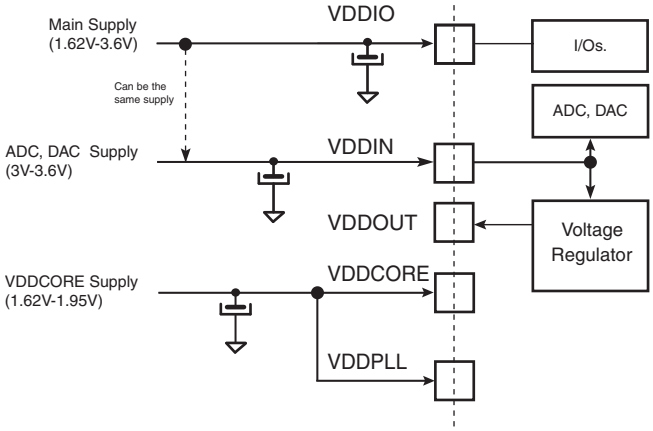

Note: Restrictions
With Main Supply < 3V, ADC and DAC are not usable.
With Main Supply >= 3V, all peripherals are usable.

Figure 5-3 below provides an example of the powering scheme when using a backup battery. Since the PIO state is preserved when in backup mode, any free PIO line can be used to switch off the external regulator by driving the PIO line at low level (PIO is input, pull-up enabled after backup reset). External wake-up of the system can be from a push button or any signal. See Section 5.6 “Wake-up Sources” for further details.TFBGA

Figure 5-3. Core Externally Supplied (backup battery)

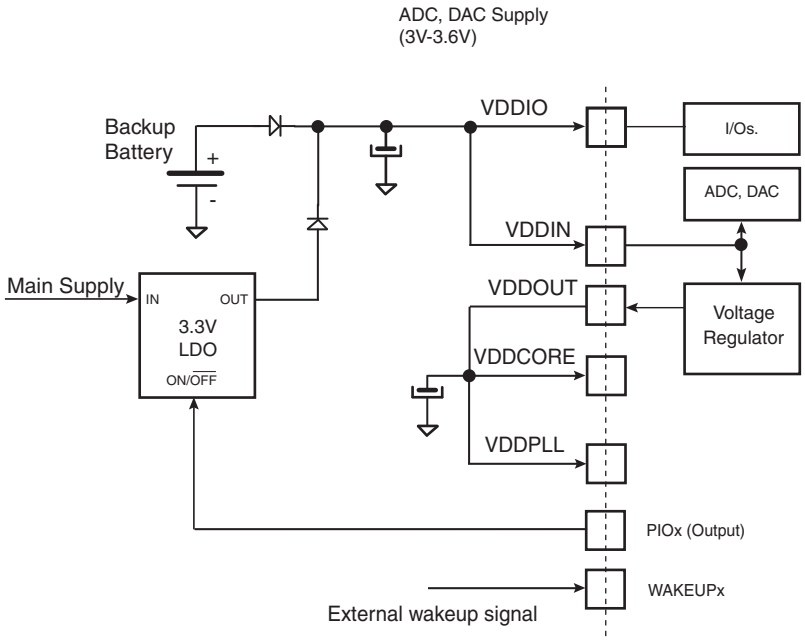

Note: The two diodes provide a "switchover circuit" (for illustration purpose) between the backup battery and the main supply when the system is put in backup mode.

5.4 Active Mode

Active mode is the normal running mode with the core clock running from the fast RC oscillator, the main crystal oscillator or the PLL. The power management controller can be used to adapt the frequency and to disable the peripheral clocks.

5.5 Low Power Modes

The various low-power modes of the SAM3N are described below:

5.5.1 Backup Mode

The purpose of backup mode is to achieve the lowest power consumption possible in a system that is performing periodic wakeups to carry out tasks but not requiring fast startup time (<0.1ms). Total current consumption is 3 µA typical.

The Supply Controller, zero-power power-on reset, RTT, RTC, Backup registers and 32 kHz oscillator (RC or crystal oscillator selected by software in the Supply Controller) are running. The regulator and the core supply are off.

Backup mode is based on the Cortex-M3 deep sleep mode with the voltage regulator disabled.

The SAM3N can be awakened from this mode through WUP0-15 pins, the supply monitor (SM), the RTT or RTC wake-up event.

Backup mode is entered by using WFE instructions with the SLEEPDEEP bit in the System Control Register of the Cortex-M3 set to 1. (See the Power management description in The ARM Cortex M3 Processor section of the product datasheet).

Exit from Backup mode happens if one of the following enable wake-up events occurs:

- WKUPEN0-15 pins (level transition, configurable debouncing)

- Supply Monitor alarm
- RTC alarm
- RTT alarm

5.5.2 Wait Mode

The purpose of the wait mode is to achieve very low power consumption while maintaining the whole device in a powered state for a startup time of less than 10 µs. Current Consumption in Wait mode is typically 15 µA (total current consumption) if the internal voltage regulator is used or 8 µA if an external regulator is used.

In this mode, the clocks of the core, peripherals and memories are stopped. However, the core, peripherals and memories power supplies are still powered. From this mode, a fast start up is available.

This mode is entered via Wait for Event (WFE) instructions with LPM = 1 (Low Power Mode bit in PMC_FSMR). The Cortex-M3 is able to handle external or internal events in order to wake up the core (WFE). By configuring the WUP0-15 external lines as fast startup wake-up pins (refer to Section 5.7 “Fast Start-Up”). RTC or RTT Alarm wake-up events can be used to wake up the CPU (exit from WFE).

Entering Wait Mode:

- Select the 4/8/12 MHz fast RC oscillator as Main Clock
- Set the LPM bit in the PMC Fast Startup Mode Register (PMC_FSMR)
- Execute the Wait-For-Event (WFE) instruction of the processor

Note: Internal Main clock resynchronization cycles are necessary between the writing of MOSCRCEN bit and the effective entry in Wait mode. Depending on the user application, Waiting for MOSCRCEN bit to be cleared is recommended to ensure that the core will not execute undesired instructions.

5.5.3 Sleep Mode

The purpose of sleep mode is to optimize power consumption of the device versus response time. In this mode, only the core clock is stopped. The peripheral clocks can be enabled. The current consumption in this mode is application dependent.

This mode is entered via Wait for Interrupt (WFI) or Wait for Event (WFE) instructions with LPM = 0 in PMC_FSMR.

The processor can be woke up from an interrupt if WFI instruction of the Cortex M3 is used, or from an event if the WFE instruction is used to enter this mode.

5.5.4 Low Power Mode Summary Table

The modes detailed above are the main low power modes. Each part can be set to on or off separately and wake up sources can be individually configured. Table 5-1 below shows a summary of the configurations of the low power modes.

Table 5-1. Low Power Mode Configuration Summary

Mode	SUPC, 32 kHz Oscillator RTC RTT Backup Registers, POR (Backup Region)	Regulator	Core Memory Peripherals	Mode Entry	Potential Wake Up Sources	Core at Wake Up	PIO State while in Low Power Mode	PIO State at Wake Up	Consumption (2) (3)	Wake Up Time(1)
Backup Mode	ON	OFF	OFF (Not powered)	WFE +SLEEPDEEP bit = 1	WUP0-15 pins BOD alarm RTC alarm RTT alarm	Reset	Previous state saved	PIOA & PIOB & PIOC Inputs with pull ups	3 µA typ(4)	< 0.1 ms
Wait Mode	ON	ON	Powered (Not clocked)	WFE +SLEEPDEEP bit = 0 +LPM bit = 1	Any Event from: Fast startup through WUP0-15 pins RTC alarm RTT alarm	Clocked back	Previous state saved	Unchanged	5 µA/15 µA (5)	< 10 µs
Sleep Mode	ON	ON	Powered(7) (Not clocked)	WFE or WFI +SLEEPDEEP bit = 0 +LPM bit = 0	Entry mode = WFI Interrupt Only; Entry mode = WFE Any Enabled Interrupt and/or Any Event from: Fast start-up through WUP0-15 pins RTC alarm RTT alarm	Clocked back	Previous state saved	Unchanged	(6)	(6)

Notes:
1. When considering wake-up time, the time required to start the PLL is not taken into account. Once started, the device works with the 4/8/12 MHz Fast RC oscillator. The user has to add the PLL start-up time if it is needed in the system. The wake-up time is defined as the time taken for wake up until the first instruction is fetched.
2. The external loads on PIOs are not taken into account in the calculation.
3. Supply Monitor current consumption is not included.
4. Total Current consumption.
5. 5 µA on VDDCORE, 15 µA for total current consumption (using internal voltage regulator), 8 µA for total current consumption (without using internal voltage regulator).
6. Depends on MCK frequency.
7. In this mode the core is supplied and not clocked but some peripherals can be clocked.

5.6 Wake-up Sources

The wake-up events allow the device to exit backup mode. When a wake-up event is detected, the Supply Controller performs a sequence which automatically reenables the core power supply and the SRAM power supply, if they are not already enabled.

Figure 5-4. Wake-up Source

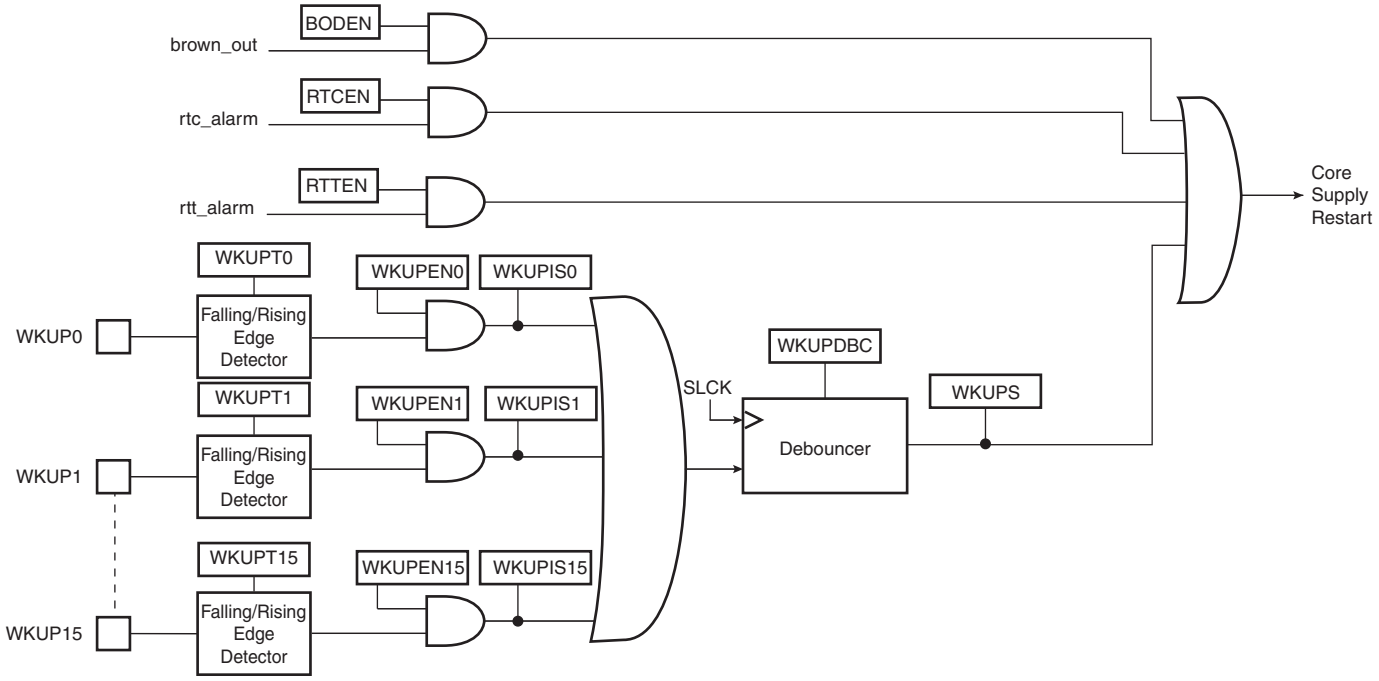

5.7 Fast Start-Up

The SAM3N allows the processor to restart in a few microseconds while the processor is in wait mode. A fast start up can occur upon detection of a low level on one of the 19 wake-up inputs (WKUP0 to 15 + SM + RTC + RTT).

The fast restart circuitry, as shown in Figure 5-5, is fully asynchronous and provides a fast start-up signal to the Power Management Controller. As soon as the fast start-up signal is asserted, the PMC automatically restarts the embedded 4 MHz fast RC oscillator, switches the master clock on this 4 MHz clock and reenables the processor clock.

Figure 5-5. Fast Start-Up Sources

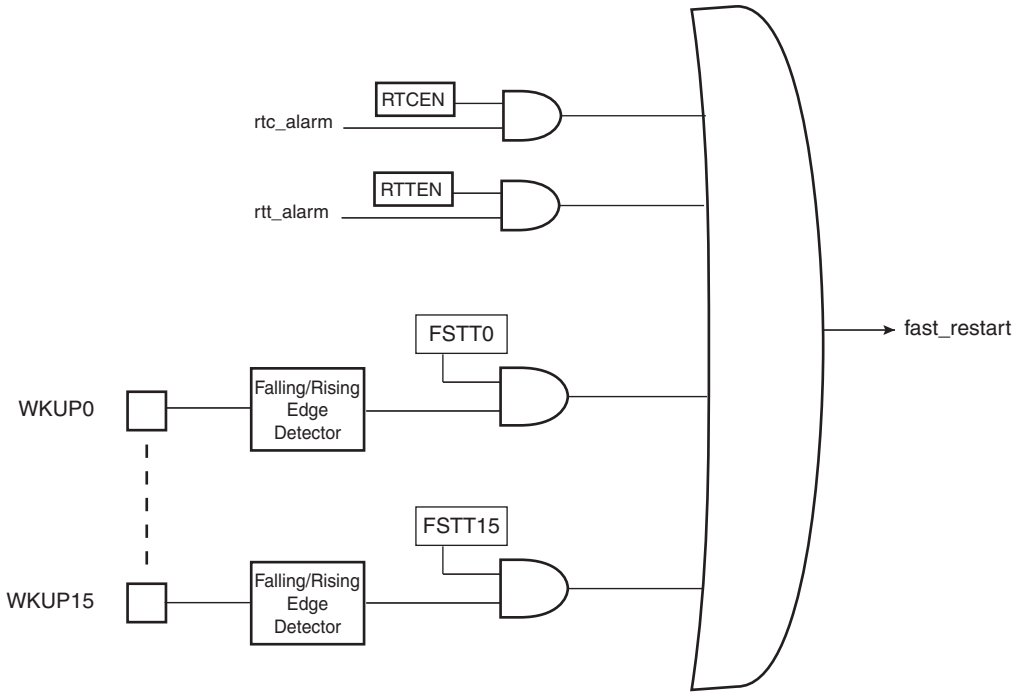

6. Input/Output Lines

The SAM3N has several kinds of input/output (I/O) lines such as general purpose I/Os (GPIO) and system I/Os. GPIOs can have alternate functionality due to multiplexing capabilities of the PIO controllers. The same PIO line can be used whether in IO mode or by the multiplexed peripheral. System I/Os include pins such as test pins, oscillators, erase or analog inputs.

6.1 General Purpose I/O Lines

GPIO Lines are managed by PIO Controllers. All I/Os have several input or output modes such as pull-up or pull-down, input Schmitt triggers, multi-drive (open-drain), glitch filters, debouncing or input change interrupt. Programming of these modes is performed independently for each I/O line through the PIO controller user interface. For more details, refer to the product PIO controller section.

The input output buffers of the PIO lines are supplied through VDDIO power supply rail.

The SAM3N embeds high speed pads able to handle up to 45 MHz for SPI clock lines and 35 MHz on other lines. See AC Characteristics Section in the Electrical Characteristics Section of the datasheet for more details. Typical pull-up and pull-down value is 100 kΩ for all I/Os.

Each I/O line also embeds an ODT (On-Die Termination), (see Figure 6-1). It consists of an internal series resistor termination scheme for impedance matching between the driver output (SAM3N) and the PCB trace impedance preventing signal reflection. The series resistor helps to reduce I/O switching current (di/dt) thereby reducing in turn, EMI. It also decreases overshoot and undershoot (ringing) due to inductance of interconnect between devices or between boards. In conclusion ODT helps diminish signal integrity issues.

Figure 6-1. On-Die Termination

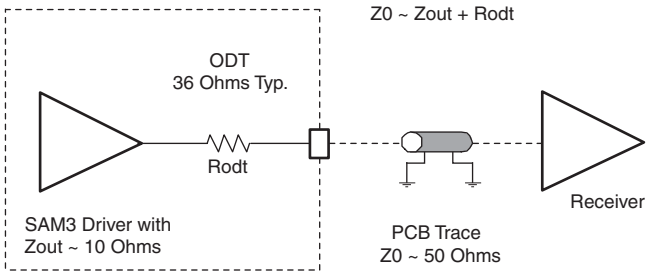

6.2 System I/O Lines

System I/O lines are pins used by oscillators, test mode, reset and JTAG to name but a few. Described below are the SAM3N system I/O lines shared with PIO lines:

These pins are software configurable as general purpose I/O or system pins. At startup the default function of these pins is always used.

Table 6-1. System I/O Configuration Pin List.

SYSTEM_IO bit number	Default function after reset	Other function	Constraints for normal start	Configuration
12	ERASE	PB12	Low Level at startup[1]	In Matrix User Interface Registers (Refer to the System I/O Configuration Register in the Bus Matrix section of the product datasheet.)
7	TCK/SWCLK	PB7	-	
6	TMS/SWDIO	PB6	-	
5	TDO/TRACESWO	PB5	-	
4	TDI	PB4	-	
-	PA7	XIN32	-	See footnote [2] below
-	PA8	XOUT32	-	
-	PB9	XIN	-	See footnote [3] below
-	PB8	XOUT	-	

Notes: 1. If PB12 is used as PIO input in user applications, a low level must be ensured at startup to prevent Flash erase before the user application sets PB12 into PIO mode.

2. In the product Datasheet Refer to: Slow Clock Generator of the Supply Controller section.

3. In the product Datasheet Refer to: 3 to 20 MHZ Crystal Oscillator information in the PMC section.

6.2.1 Serial Wire JTAG Debug Port (SWJ-DP) Pins

The SWJ-DP pins are TCK/SWCLK, TMS/SWDIO, TDO/SWO, TDI and commonly provided on a standard 20-pin JTAG connector defined by ARM. For more details about voltage reference and reset state, refer to Table 3-1 on page 7.

At startup, SWJ-DP pins are configured in SWJ-DP mode to allow connection with debugging probe. Please refer to the Debug and Test Section of the product datasheet.

SWJ-DP pins can be used as standard I/Os to provide users more general input/output pins when the debug port is not needed in the end application. Mode selection between SWJ-DP mode (System IO mode) and general IO mode is performed through the AHB Matrix Special Function Registers (MATRIX_SFR). Configuration of the pad for pull-up, triggers, debouncing and glitch filters is possible regardless of the mode.

The JTAGSEL pin is used to select the JTAG boundary scan when asserted at a high level. It integrates a permanent pull-down resistor of about 15 kΩ to GND, so that it can be left unconnected for normal operations.

By default, the JTAG Debug Port is active. If the debugger host wants to switch to the Serial Wire Debug Port, it must provide a dedicated JTAG sequence on TMS/SWDIO and TCK/SWCLK which disables the JTAG-DP and enables the SW-DP. When the Serial Wire Debug Port is active, TDO/TRACESWO can be used for trace.

The asynchronous TRACE output (TRACESWO) is multiplexed with TDO. So the asynchronous trace can only be used with SW-DP, not JTAG-DP. For more information about SW-DP and JTAG-DP switching, please refer to the Debug and Test Section.

6.3 Test Pin

The TST pin is used for JTAG Boundary Scan Manufacturing Test or Fast Flash programming mode of the SAM3N series. The TST pin integrates a permanent pull-down resistor of about 15 kΩ to GND, so that it can be left unconnected for normal operations. To enter fast programming mode, see the Fast Flash Programming Interface (FFPI) section. For more on the manufacturing and test mode, refer to the “Debug and Test” section of the product datasheet.

6.4 NRST Pin

The NRST pin is bidirectional. It is handled by the on-chip reset controller and can be driven low to provide a reset signal to the external components or asserted low externally to reset the microcontroller. It will reset the Core and the peripherals except the Backup region (RTC, RTT and Supply Controller). There is no constraint on the length of the reset pulse and the reset controller can guarantee a minimum pulse length. The NRST pin integrates a permanent pull-up resistor to VDDIO of about 100 kΩ. By default, the NRST pin is configured as an input.

6.5 ERASE Pin

The ERASE pin is used to reinitialize the Flash content (and some of its NVM bits) to an erased state (all bits read as logic level 1). It integrates a pull-down resistor of about 100 kΩ to GND, so that it can be left unconnected for normal operations.

This pin is debounced by SCLK to improve the glitch tolerance. When the ERASE pin is tied high during less than 100 ms, it is not taken into account. The pin must be tied high during more than 220 ms to perform a Flash erase operation.

The ERASE pin is a system I/O pin and can be used as a standard I/O. At startup, the ERASE pin is not configured as a PIO pin. If the ERASE pin is used as a standard I/O, startup level of this pin must be low to prevent unwanted erasing. Please refer to Section 11.2 “Peripheral Signals Multiplexing on I/O Lines” on page 42. Also, if the ERASE pin is used as a standard I/O output, asserting the pin to low does not erase the Flash.

7. Processor and Architecture

7.1 ARM Cortex-M3 Processor

- Version 2.0
- Thumb-2 (ISA) subset consisting of all base Thumb-2 instructions, 16-bit and 32-bit.
- Harvard processor architecture enabling simultaneous instruction fetch with data load/store.
- Three-stage pipeline.
- Single cycle 32-bit multiply.
- Hardware divide.
- Thumb and Debug states.
- Handler and Thread modes.
- Low latency ISR entry and exit.

7.2 APB/AHB Bridge

The SAM3N4/2/1/0/00 product embeds one peripheral bridge:

The peripherals of the bridge are clocked by MCK.

7.3 Matrix Masters

The Bus Matrix of the SAM3N product manages 3 masters, which means that each master can perform an access concurrently with others, to an available slave.

Each master has its own decoder, which is defined specifically for each master. In order to simplify the addressing, all the masters have the same decodings.

Table 7-1. List of Bus Matrix Masters

Master 0	Cortex-M3 Instruction/Data
Master 1	Cortex-M3 System
Master 2	Peripheral DMA Controller (PDC)

7.4 Matrix Slaves

The Bus Matrix of the SAM3N product manages 4 slaves. Each slave has its own arbiter, allowing a different arbitration per slave.

Table 7-2. List of Bus Matrix Slaves

Slave 0	Internal SRAM
Slave 1	Internal ROM
Slave 2	Internal Flash
Slave 3	Peripheral Bridge

7.5 Master to Slave Access

All the Masters can normally access all the Slaves. However, some paths do not make sense, for example allowing access from the Cortex-M3 S Bus to the Internal ROM. Thus, these paths are forbidden or simply not wired, and shown as "-" in Table 7-3.

Table 7-3. SAM3N Master to Slave Access

Masters		0	1	2
Slaves		Cortex-M3 I/D Bus	Cortex-M3 S Bus	PDC
0	Internal SRAM	-	X	X
1	Internal ROM	X	-	X
2	Internal Flash	X	-	-
3	Peripheral Bridge	-	X	X

7.6 Peripheral DMA Controller

- Handles data transfer between peripherals and memories
- Low bus arbitration overhead
  - One Master Clock cycle needed for a transfer from memory to peripheral
  - Two Master Clock cycles needed for a transfer from peripheral to memory
- Next Pointer management for reducing interrupt latency requirement

The Peripheral DMA Controller handles transfer requests from the channel according to the following priorities (Low to High priorities):

Table 7-4. Peripheral DMA Controller

Instance name	Channel T/R	100 & 64 Pins	48 Pins
TWI0	Transmit	x	x
UART0	Transmit	x	x
USART0	Transmit	x	x
DAC	Transmit	x	N/A
SPI	Transmit	x	x
TWI0	Receive	x	x
UART0	Receive	x	x
USART0	Receive	x	x
ADC	Receive	x	x
SPI	Receive	x	x

7.7 Debug and Test Features

- Debug access to all memory and registers in the system, including Cortex-M3 register bank when the core is running, halted, or held in reset.
- Serial Wire Debug Port (SW-DP) and Serial Wire JTAG Debug Port (SWJ-DP) debug access
- Flash Patch and Breakpoint (FPB) unit for implementing breakpoints and code patches
- Data Watchpoint and Trace (DWT) unit for implementing watchpoints, data tracing, and system profiling
- Instrumentation Trace Macrocell (ITM) for support of printf style debugging
- IEEE1149.1 JTAG Boundary-can on All Digital Pins

8. Product Mapping

Figure 8-1. SAM3N4/2/1/0/00 Product Mapping

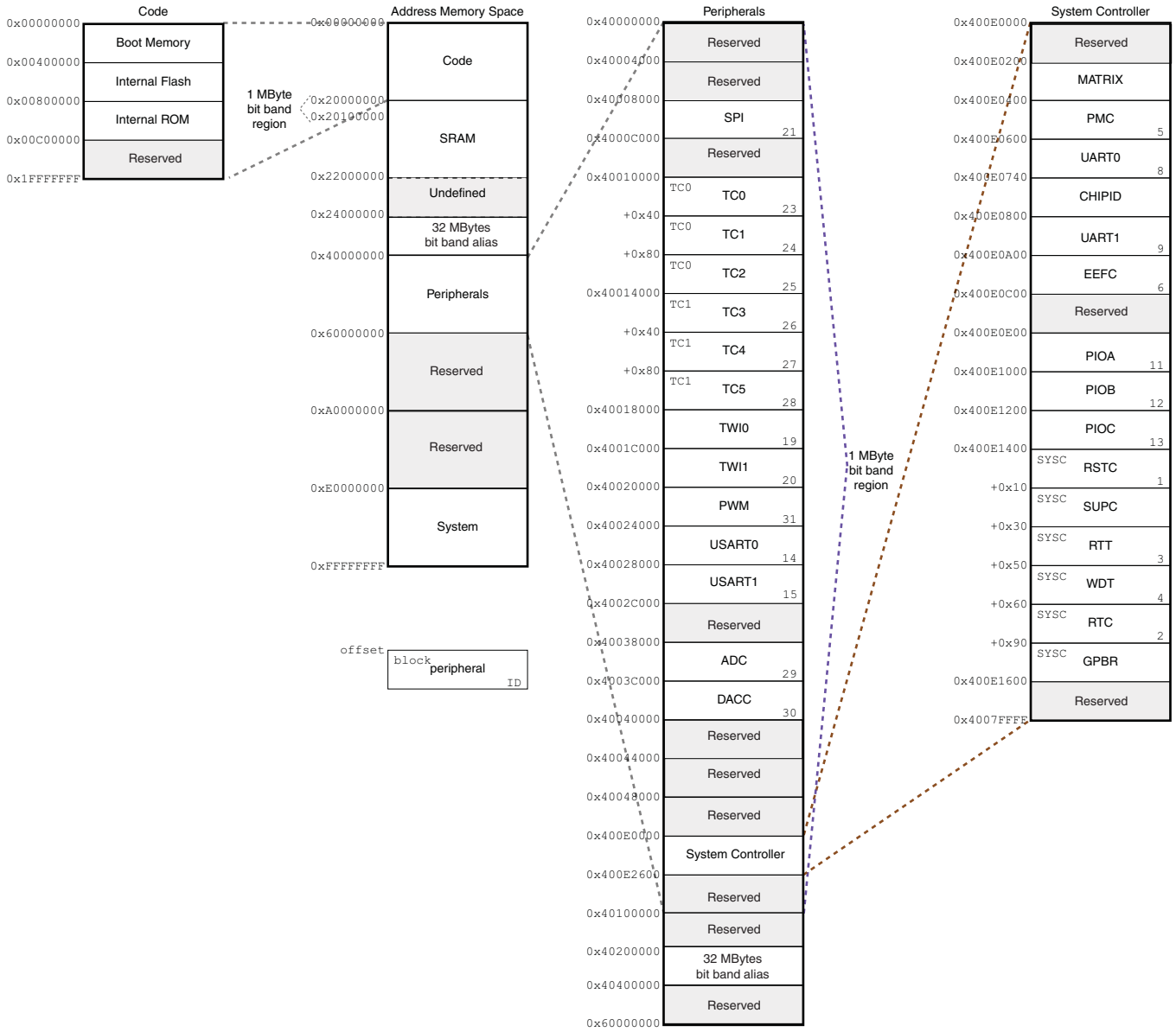

9. Memories

9.1 Embedded Memories

9.1.1 Internal SRAM

The SAM3N4 product embeds a total of 24-Kbytes high-speed SRAM.

The SAM3N2 product embeds a total of 16-Kbytes high-speed SRAM.

The SAM3N1 product embeds a total of 8-Kbytes high-speed SRAM.

The SRAM is accessible over System Cortex-M3 bus at address 0x2000 0000.

The SRAM is in the bit band region. The bit band alias region is from 0x2200 0000 and 0x23FF FFFF.

RAM size must be configurable by calibration fuses.

9.1.2 Internal ROM

The SAM3N product embeds an Internal ROM, which contains the SAM Boot Assistant (SAM-BA), In Application Programming routines (IAP) and Fast Flash Programming Interface (FFPI).

At any time, the ROM is mapped at address 0x0080 0000.

9.1.3 Embedded Flash

9.1.3.1 Flash Overview

The Flash of the SAM3N4 (256 Kbytes) is organized in one bank of 1024 pages of 256 bytes (Single plane).

The Flash of the SAM3N2 (128 Kbytes) is organized in one bank of 512 pages of 256 bytes (Single Plane).

The Flash of the SAM3N1 (64 Kbytes) is organized in one bank of 256 pages of 256 bytes (Single plane).

The Flash contains a 128-byte write buffer, accessible through a 32-bit interface.

9.1.3.2 Flash Power Supply

The Flash is supplied by VDDCORE.

9.1.3.3 Enhanced Embedded Flash Controller

The Enhanced Embedded Flash Controller (EEFC) manages accesses performed by the masters of the system. It enables reading the Flash and writing the write buffer. It also contains a User Interface, mapped on the APB.

The Enhanced Embedded Flash Controller ensures the interface of the Flash block with the 32-bit internal bus. Its 128-bit wide memory interface increases performance.

The user can choose between high performance or lower current consumption by selecting either 128-bit or 64-bit access. It also manages the programming, erasing, locking and unlocking sequences of the Flash using a full set of commands.

One of the commands returns the embedded Flash descriptor definition that informs the system about the Flash organization, thus making the software generic.

9.1.3.4 Flash Speed

The user needs to set the number of wait states depending on the frequency used.

For more details, refer to the AC Characteristics sub section in the product Electrical Characteristics Section.

9.1.3.5 Lock Regions

Several lock bits used to protect write and erase operations on lock regions. A lock region is composed of several consecutive pages, and each lock region has its associated lock bit.

Table 9-1. Lock bit number

Product	Number of lock bits	Lock region size
SAM3N4	16	16 kbytes (64 pages)
SAM3N2	8	16 kbytes (64 pages)
SAM3N1	4	16 kbytes (64 pages)

If a locked-region's erase or program command occurs, the command is aborted and the EEFC triggers an interrupt.

The lock bits are software programmable through the EEFC User Interface. The command "Set Lock Bit" enables the protection. The command "Clear Lock Bit" unlocks the lock region.

Asserting the ERASE pin clears the lock bits, thus unlocking the entire Flash.

9.1.3.6 Security Bit Feature

The SAM3N features a security bit, based on a specific General Purpose NVM bit (GPNVM bit 0). When the security is enabled, any access to the Flash, either through the ICE interface or through the Fast Flash Programming Interface, is forbidden. This ensures the confidentiality of the code programmed in the Flash.

This security bit can only be enabled, through the command "Set General Purpose NVM Bit 0" of the EEFC User Interface. Disabling the security bit can only be achieved by asserting the ERASE pin at 1, after a full Flash erase is performed. When the security bit is deactivated, all accesses to the Flash are permitted.

It is important to note that the assertion of the ERASE pin should always be longer than 200 ms.

As the ERASE pin integrates a permanent pull-down, it can be left unconnected during normal operation. However, it is safer to connect it directly to GND for the final application.

9.1.3.7 Calibration Bits

NVM bits are used to calibrate the brownout detector and the voltage regulator. These bits are factory configured and cannot be changed by the user. The ERASE pin has no effect on the calibration bits.

9.1.3.8 Unique Identifier

Each device integrates its own 128-bit unique identifier. These bits are factory configured and cannot be changed by the user. The ERASE pin has no effect on the unique identifier.

9.1.3.9 *Fast Flash Programming Interface*

The Fast Flash Programming Interface allows programming the device through either a serial JTAG interface or through a multiplexed fully-handshaked parallel port. It allows gang programming with market-standard industrial programmers.

The FFPI supports read, page program, page erase, full erase, lock, unlock and protect commands.

The Fast Flash Programming Interface is enabled and the Fast Programming Mode is entered when TST and PA0 and PA1are tied low.

9.1.3.10 *SAM-BA Boot*

The SAM-BA Boot is a default Boot Program which provides an easy way to program in-situ the on-chip Flash memory.

The SAM-BA Boot Assistant supports serial communication via the UART0.

The SAM-BA Boot provides an interface with SAM-BA Graphic User Interface (GUI).

The SAM-BA Boot is in ROM and is mapped in Flash at address 0x0 when GPNVM bit 1 is set to 0.

9.1.3.11 *GPNVM Bits*

The SAM3N features three GPNVM bits that can be cleared or set respectively through the commands “Clear GPNVM Bit” and “Set GPNVM Bit” of the EEFC User Interface.

.

Table 9-2. General-purpose Non volatile Memory Bits

GPNVMBit[#]	Function
0	Security bit
1	Boot mode selection

9.1.4 Boot Strategies

The system always boots at address 0x0. To ensure a maximum boot possibilities the memory layout can be changed via GPNVM.

A general purpose NVM (GPNVM) bit is used to boot either on the ROM (default) or from the Flash.

The GPNVM bit can be cleared or set respectively through the commands “Clear General-purpose NVM Bit” and “Set General-purpose NVM Bit” of the EEFC User Interface.

Setting the GPNVM Bit 1 selects the boot from the Flash, clearing it selects the boot from the ROM. Asserting ERASE clears the GPNVM Bit 1 and thus selects the boot from the ROM by default.

10. System Controller

The System Controller is a set of peripherals, which allow handling of key elements of the system, such as power, resets, clocks, time, interrupts, watchdog, etc...

See the System Controller block diagram in Figure 10-1 on page 35.

Figure 10-1. System Controller Block Diagram

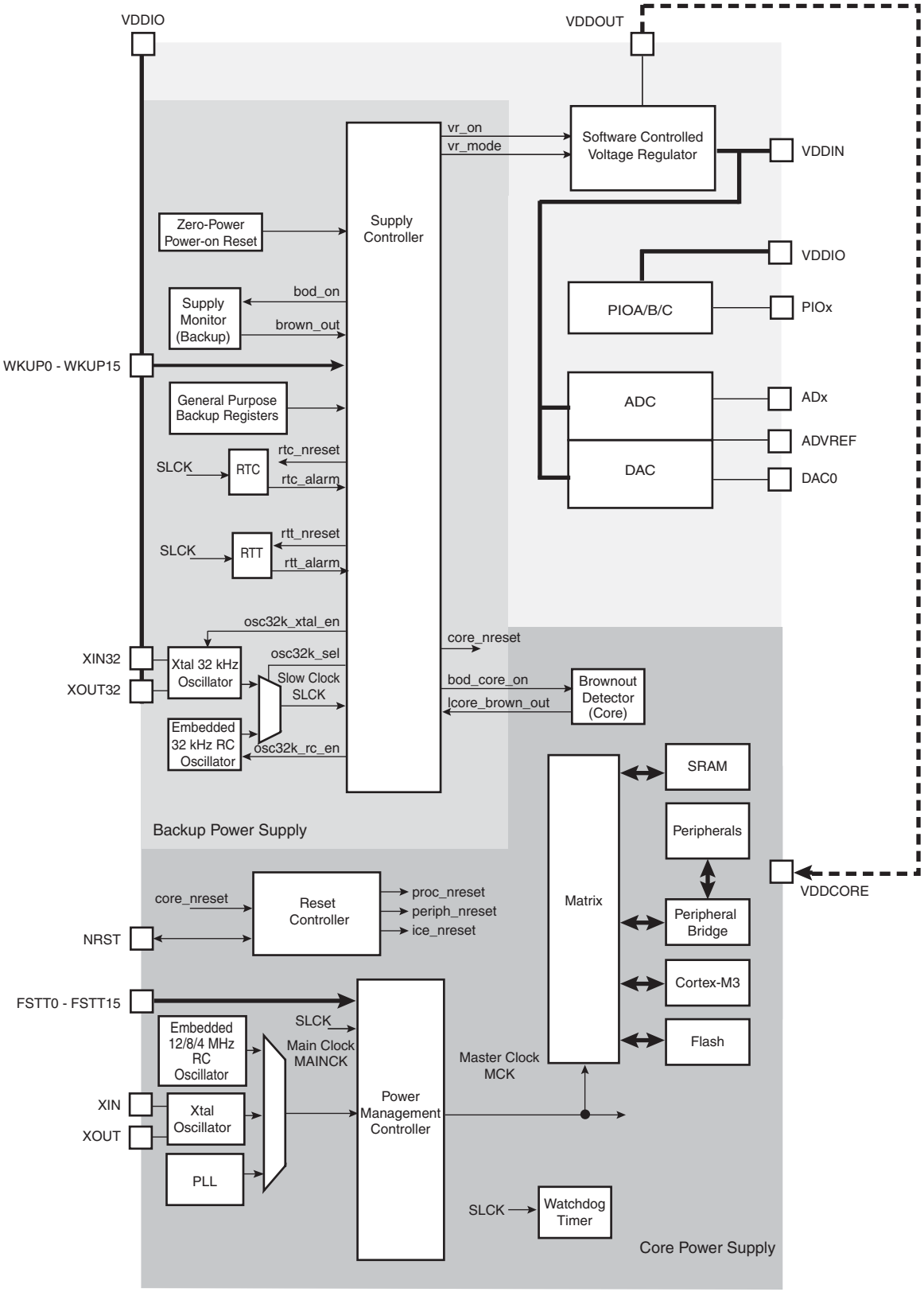

FSTT0 - FSTT15 are possible Fast Startup Sources, generated by WKUP0-WKUP15 Pins, but are not physical pins.

10.1 System Controller and Peripherals Mapping

Please refer to Figure 8-1, "SAM3N4/2/1/0/00 Product Mapping" on page 30.

All the peripherals are in the bit band region and are mapped in the bit band alias region.

10.2 Power-on-Reset, Brownout and Supply Monitor

The SAM3N embeds three features to monitor, warn and/or reset the chip:

- Power-on-Reset on VDDIO
- Brownout Detector on VDDCORE
- Supply Monitor on VDDIO

10.2.1 Power-on-Reset

The Power-on-Reset monitors VDDIO. It is always activated and monitors voltage at start up but also during power down. If VDDIO goes below the threshold voltage, the entire chip is reset. For more information, refer to the Electrical Characteristics section of the datasheet.

10.2.2 Brownout Detector on VDDCORE

The Brownout Detector monitors VDDCORE. It is active by default. It can be deactivated by software through the Supply Controller (SUPC_MR). It is especially recommended to disable it during low-power modes such as wait or sleep modes.

If VDDCORE goes below the threshold voltage, the reset of the core is asserted. For more information, refer to the Supply Controller (SUPC) and Electrical Characteristics sections of the datasheet.

10.2.3 Supply Monitor on VDDIO

The Supply Monitor monitors VDDIO. It is inactive by default. It can be activated by software and is fully programmable with 16 steps for the threshold (between 1.9V to 3.4V). It is controlled by the Supply Controller (SUPC). A sample mode is possible. It allows to divide the supply monitor power consumption by a factor of up to 2048. For more information, refer to the SUPC and Electrical Characteristics sections of the datasheet.

10.3 Reset Controller

The Reset Controller is based on a Power-on-Reset cell, and a Supply Monitor on VDDCORE.

The Reset Controller is capable to return to the software the source of the last reset, either a general reset, a wake-up reset, a software reset, a user reset or a watchdog reset.

The Reset Controller controls the internal resets of the system and the NRST pin input/output. It is capable to shape a reset signal for the external devices, simplifying to a minimum connection of a push-button on the NRST pin to implement a manual reset.

The configuration of the Reset Controller is saved as supplied on VDDIO.

10.4 Supply Controller (SUPC)

The Supply Controller controls the power supplies of each section of the processor and the peripherals (via Voltage regulator control)

The Supply Controller has its own reset circuitry and is clocked by the 32 kHz slow clock generator.

The reset circuitry is based on a zero-power power-on reset cell and a brownout detector cell. The zero-power power-on reset allows the Supply Controller to start properly, while the software-programmable brownout detector allows detection of either a battery discharge or main voltage loss.

The Slow Clock generator is based on a 32 kHz crystal oscillator and an embedded 32 kHz RC oscillator. The Slow Clock defaults to the RC oscillator, but the software can enable the crystal oscillator and select it as the Slow Clock source.

The Supply Controller starts up the device by sequentially enabling the internal power switches and the Voltage Regulator, then it generates the proper reset signals to the core power supply.

It also enables to set the system in different low power modes and to wake it up from a wide range of events.

10.5 Clock Generator

The Clock Generator is made up of:

- One Low Power 32768Hz Slow Clock Oscillator with bypass mode
- One Low-Power RC Oscillator
- One 3-20 MHz Crystal or Ceramic resonator Oscillator, which can be bypassed
- One Fast RC Oscillator factory programmed, 3 output frequencies can be selected: 4, 8 or 12 MHz. By default 4 MHz is selected.
- One 60 to 130 MHz programmable PLL, capable to provide the clock MCK to the processor and to the peripherals. The input frequency of PLL is from 3.5 to 20 MHz.

Figure 10-2. Clock Generator Block Diagram

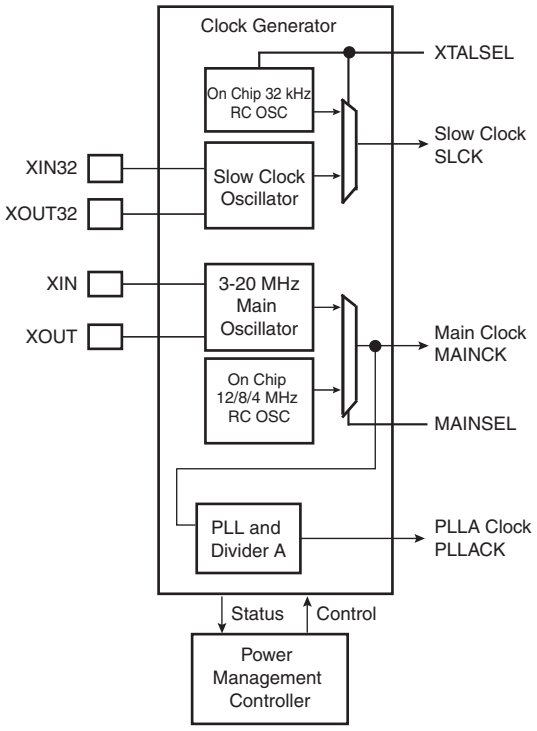

10.6 Power Management Controller

The Power Management Controller provides all the clock signals to the system. It provides:

- the Processor Clock HCLK
- the Free running processor clock FCLK
- the Cortex SysTick external clock
- the Master Clock MCK, in particular to the Matrix and the memory interfaces
- independent peripheral clocks, typically at the frequency of MCK
- three programmable clock outputs: PCK0, PCK1 and PCK2

The Supply Controller selects between the 32 kHz RC oscillator or the crystal oscillator. The unused oscillator is disabled automatically so that power consumption is optimized.

By default, at startup the chip runs out of the Master Clock using the Fast RC Oscillator running at 4 MHz.

The user can trim by software the 8 and 12 MHz RC Oscillator frequency.

Figure 10-3. SAM3N4/2/1/0/00 Power Management Controller Block Diagram

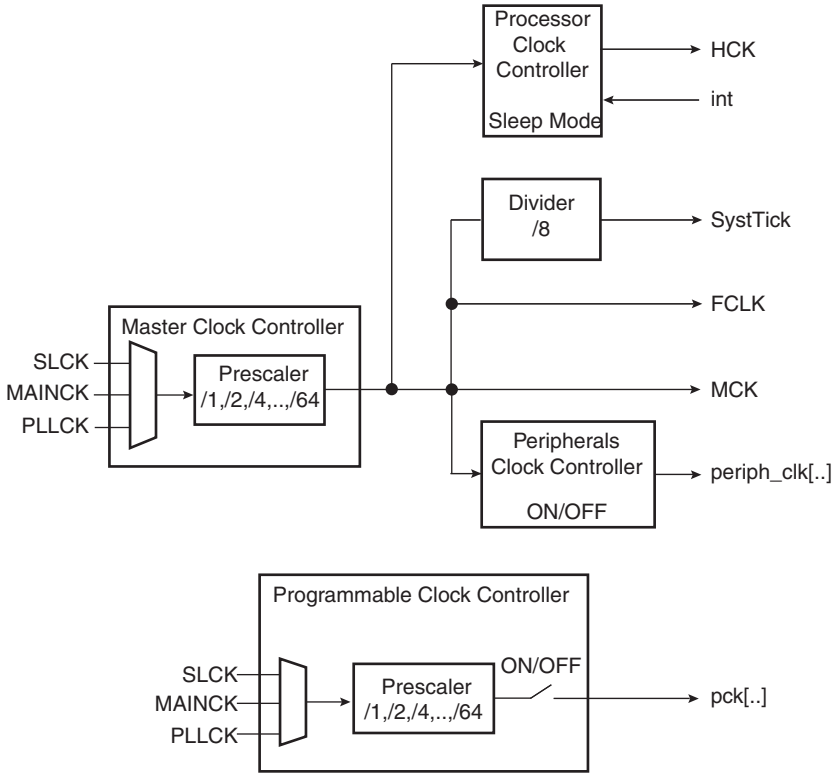

The SysTick calibration value is fixed at 6000 which allows the generation of a time base of 1 ms with SysTick clock at 6 MHz (48 MHz/8)

10.7 Watchdog Timer

- 16-bit key-protected only-once-Programmable Counter
- Windowed, prevents the processor to be in a dead-lock on the watchdog access

10.8 SysTick Timer

- 24-bit down counter
- Self-reload capability
- Flexible System timer

10.9 Real-time Timer

- Real-time Timer, allowing backup of time with different accuracies
  - 32-bit Free-running back-up Counter
  - Integrates a 16-bit programmable prescaler running on slow clock
  - Alarm register capable to generate a wake-up of the system through the Shut Down Controller

10.10 Real Time Clock

- Low power consumption
- Full asynchronous design
- Two hundred year calendar
- Programmable Periodic Interrupt
- Alarm and update parallel load
- Control of alarm and update Time/Calendar Data In

10.11 General Purpose Backup Registers

- Eight 32-bit general-purpose backup registers

10.12 Nested Vectored Interrupt Controller

- Thirty Two maskable external interrupts
- Sixteen priority levels
- Processor state automatically saved on interrupt entry, and restored on
- Dynamic reprioritization of interrupts
- Priority grouping
  - selection of pre-empting interrupt levels and non pre-empting interrupt levels
- Support for tail-chaining and late arrival of interrupts
  - back-to-back interrupt processing without the overhead of state saving and restoration between interrupts.
- Processor state automatically saved on interrupt entry and restored on interrupt exit, with no instruction overhead

10.13 Chip Identification

- Chip Identifier (CHIPID) registers permit recognition of the device and its revision.

Table 10-1. SAM3N Chip ID Register

Chip Name	CHIPID_CIDR	CHIPID_EXID
ATSAM3N4C (Rev A)	0x29540960	0x0
ATSAM3N2C (Rev A)	0x29590760	0x0
ATSAM3N1C (Rev A)	0x29580560	0x0
ATSAM3N4B (Rev A)	0x29440960	0x0
ATSAM3N2B (Rev A)	0x29490760	0x0
ATSAM3N1B (Rev A)	0x29480560	0x0
ATSAM3N4A (Rev A)	0x29340960	0x0
ATSAM3N2A (Rev A)	0x29390760	0x0
ATSAM3N1A (Rev A)	0x29380560	0x0

- JTAG ID: 0x05B2E03F

10.14 UART

- Two-pin UART
  - Implemented features are 100% compatible with the standard Atmel USART
  - Independent receiver and transmitter with a common programmable Baud Rate Generator
  - Even, Odd, Mark or Space Parity Generation
  - Parity, Framing and Overrun Error Detection
  - Automatic Echo, Local Loopback and Remote Loopback Channel Modes
  - Support for two PDC channels with connection to receiver and transmitter

10.15 PIO Controllers

- 3 PIO Controllers, PIOA, PIOB and PIOC (100-pin version only) controlling a maximum of 79 I/O Lines
- Each PIO Controller controls up to 32 programmable I/O Lines
- Fully programmable through Set/Clear Registers

Table 10-2. PIO available according to pin count

Version	48 pin	64 pin	100 pin
PIOA	21	32	32
PIOB	13	15	15
PIOC	-	-	32

- Multiplexing of four peripheral functions per I/O Line
- For each I/O Line (whether assigned to a peripheral or used as general purpose I/O)
  - Input change, rising edge, falling edge, low level and level interrupt
  - Debouncing and Glitch filter

  - Multi-drive option enables driving in open drain
  - Programmable pull up on each I/O line
  - Pin data status register, supplies visibility of the level on the pin at any time
- Selection of the drive level
- Synchronous output, provides Set and Clear of several I/O lines in a single write

11. Peripherals

11.1 Peripheral Identifiers

Table 11-1 defines the Peripheral Identifiers of the SAM3N4/2/1/0/00. A peripheral identifier is required for the control of the peripheral interrupt with the Nested Vectored Interrupt Controller and for the control of the peripheral clock with the Power Management Controller.

Table 11-1. Peripheral Identifiers

Instance ID	Instance Name	NVIC Interrupt	PMC Clock Control	Instance Description
0	SUPC	**X**		**Supply Controller**
1	RSTC	**X**		Reset Controller
2	RTC	**X**		Real Time Clock
3	RTT	**X**		Real Time Timer
4	WDT	**X**		Watchdog Timer
5	PMC	**X**		Power Management Controller
6	EEFC	**X**		Enhanced Flash Controller
7	-	**-**		Reserved
8	UART0	**X**	**X**	UART 0
9	UART1	**X**	**X**	UART 1
10	-	**-**	**-**	Reserved
11	PIOA	**X**	**X**	Parallel I/O Controller A
12	PIOB	**X**	**X**	Parallel I/O Controller B
13	PIOC	**X**	**X**	Parallel I/O Controller C
14	USART0	**X**	**X**	USART 0
15	USART1	**X**	**X**	USART 1
16	-	**-**	**-**	Reserved
17	-	**-**	**-**	Reserved
18	-	**-**	**-**	Reserved
19	TWI0	**X**	**X**	Two Wire Interface 0
20	TWI1	**X**	**X**	Two Wire Interface 1
21	SPI	**X**	**X**	Serial Peripheral Interface
22	-	**-**	**-**	Reserved
23	TC0	**X**	**X**	Timer/Counter 0
24	TC1	**X**	**X**	Timer/Counter 1

Table 11-1. Peripheral Identifiers (Continued)

Instance ID	Instance Name	NVIC Interrupt	PMC Clock Control	Instance Description
25	TC2	**X**	**X**	Timer/Counter 2
26	TC3	**X**	**X**	Timer/Counter 3
27	TC4	**X**	**X**	Timer/Counter 4
28	TC5	**X**	**X**	Timer/Counter 5
29	ADC	**X**	**X**	Analog-to-Digital Converter
30	DACC	**X**	**X**	Digital-to-Analog Converter
31	PWM	**X**	**X**	Pulse Width Modulation

11.2 Peripheral Signals Multiplexing on I/O Lines

The SAM3N product features 2 PIO controllers (48-pin and 64-pin version) or 3 PIO controllers (100-pin version), PIOA, PIOB and PIOC, that multiplex the I/O lines of the peripheral set.

The SAM3N 64-pin and 100-pin PIO Controller controls up to 32 lines (see Table 10-2, “PIO available according to pin count,” on page 40). Each line can be assigned to one of three peripheral functions: A, B or C. The multiplexing tables in the following paragraphs define how the I/O lines of the peripherals A, B and C are multiplexed on the PIO Controllers. The column “Comments” has been inserted in this table for the user’s own comments; it may be used to track how pins are defined in an application.

Note that some peripheral functions which are output only, might be duplicated within the tables.

11.2.1 PIO Controller A Multiplexing

Table 11-2. Multiplexing on PIO Controller A (PIOA)

I/O Line	Peripheral A	Peripheral B	Peripheral C	Extra Function	System Function	Comments
PA0	PWM0	TIOA0		WKUP0		High drive
PA1	PWM1	TIOB0		WKUP1		High drive
PA2	PWM2	SCK0	DATRG	WKUP2		High drive
PA3	TWD0	NPCS3				High drive
PA4	TWCK0	TCLK0		WKUP3		
PA5	RXD0	NPCS3		WKUP4		
PA6	TXD0	PCK0				
PA7	RTS0	PWM3			XIN32	
PA8	CTS0	ADTRG		WKUP5	XOUT32	
PA9	URXD0	NPCS1		WKUP6		
PA10	UTXD0	NPCS2				
PA11	NPCS0	PWM0		WKUP7		
PA12	MISO	PWM1				
PA13	MOSI	PWM2				
PA14	SPCK	PWM3		WKUP8		
PA15		TIOA1		WKUP14		
PA16		TIOB1		WKUP15		
PA17		PCK1		AD0		
PA18		PCK2		AD1		
PA19				AD2/WKUP9		
PA20				AD3/WKUP10		
PA21	RXD1	PCK1		AD8		64/100-pin versions
PA22	TXD1	NPCS3		AD9		64/100-pin versions
PA23	SCK1	PWM0				64/100-pin versions
PA24	RTS1	PWM1				64/100-pin versions
PA25	CTS1	PWM2				64/100-pin versions
PA26		TIOA2				64/100-pin versions
PA27		TIOB2				64/100-pin versions
PA28		TCLK1				64/100-pin versions
PA29		TCLK2				64/100-pin versions
PA30		NPCS2		WKUP11		64/100-pin versions
PA31	NPCS1	PCK2				64/100-pin versions

11.2.2 PIO Controller B Multiplexing

Table 11-3. Multiplexing on PIO Controller B (PIOB)

I/O Line	Peripheral A	Peripheral B	Peripheral C	Extra Function	System Function	Comments
PB0	PWM0			AD4		
PB1	PWM1			AD5		
PB2	URXD1	NPCS2		AD6/WKUP12		
PB3	UTXD1	PCK2		AD7		
PB4	TWD1	PWM2			TDI	
PB5	TWCK1			WKUP13	TDO/ TRACESWO	
PB6					TMS/SWDIO	
PB7					TCK/SWCLK	
PB8					XOUT	
PB9					XIN	
PB10						
PB11						
PB12					ERASE	
PB13		PCK0		DAC0		64/100-pin versions
PB14	NPCS1	PWM3				64/100-pin versions

11.2.3 PIO Controller C Multiplexing

I/O Line	Peripheral A	Peripheral B	Peripheral C	Extra Function	System Function	Comments
PC0						100-pin version
PC1						100-pin version
PC2						100-pin version
PC3						100-pin version
PC4		NPCS1				100-pin version
PC5						100-pin version
PC6						100-pin version
PC7		NPCS2				100-pin version
PC8		PWM0				100-pin version
PC9		PWM1				100-pin version
PC10		PWM2				100-pin version
PC11		PWM3				100-pin version
PC12				AD12		100-pin version
PC13				AD10		100-pin version
PC14		PCK2				100-pin version
PC15				AD11		100-pin version
PC16		PCK0				100-pin version
PC17		PCK1				100-pin version
PC18		PWM0				100-pin version
PC19		PWM1				100-pin version
PC20		PWM2				100-pin version
PC21		PWM3				100-pin version
PC22		PWM0				100-pin version
PC23		TIOA3				100-pin version
PC24		TIOB3				100-pin version
PC25		TCLK3				100-pin version
PC26		TIOA4				100-pin version
PC27		TIOB4				100-pin version
PC28		TCLK4				100-pin version
PC29		TIOA5		AD13		100-pin version
PC30		TIOB5		AD14		100-pin version
PC31		TCLK5		AD15		100-pin version

12. Embedded Peripherals Overview

12.1 Serial Peripheral Interface (SPI)

- Supports communication with serial external devices
  - Four chip selects with external decoder support allow communication with up to 15 peripherals
  - Serial memories, such as DataFlash and 3-wire EEPROMs
  - Serial peripherals, such as ADCs, DACs, LCD Controllers, CAN Controllers and Sensors
  - External co-processors
- Master or slave serial peripheral bus interface
  - 8- to 16-bit programmable data length per chip select
  - Programmable phase and polarity per chip select
  - Programmable transfer delays between consecutive transfers and between clock and data per chip select
  - Programmable delay between consecutive transfers
  - Selectable mode fault detection
- Very fast transfers supported
  - Transfers with baud rates up to MCK
  - The chip select line may be left active to speed up transfers on the same device

12.2 Two Wire Interface (TWI)

- Master, Multi-Master and Slave Mode Operation
- Compatibility with Atmel two-wire interface, serial memory and I^2C compatible devices
- One, two or three bytes for slave address
- Sequential read/write operations
- Bit Rate: Up to 400 kbit/s
- General Call Supported in Slave Mode
- Connecting to PDC channel capabilities optimizes data transfers in Master Mode only (for TWI0 only)
  - One channel for the receiver, one channel for the transmitter
  - Next buffer support

12.3 Universal Asynchronous Receiver Transceiver (UART)

- Two-pin UART
  - Implemented features are 100% compatible with the standard Atmel USART
  - Independent receiver and transmitter with a common programmable Baud Rate Generator
  - Even, Odd, Mark or Space Parity Generation
  - Parity, Framing and Overrun Error Detection
  - Automatic Echo, Local Loopback and Remote Loopback Channel Modes

  - Support for two PDC channels with connection to receiver and transmitter (for UART0 only)

12.4 USART

- Programmable Baud Rate Generator
- 5- to 9-bit full-duplex synchronous or asynchronous serial communications
  - 1, 1.5 or 2 stop bits in Asynchronous Mode or 1 or 2 stop bits in Synchronous Mode
  - Parity generation and error detection
  - Framing error detection, overrun error detection
  - MSB- or LSB-first
  - Optional break generation and detection
  - By 8 or by-16 over-sampling receiver frequency
  - Hardware handshaking RTS-CTS
  - Receiver time-out and transmitter timeguard
  - Optional Multi-drop Mode with address generation and detection
- RS485 with driver control signal
- ISO7816, T = 0 or T = 1 Protocols for interfacing with smart cards (Only on USART0)
  - NACK handling, error counter with repetition and iteration limit
- SPI Mode
  - Master or Slave
  - Serial Clock programmable Phase and Polarity
  - SPI Serial Clock (SCK) Frequency up to MCK/4
- IrDA modulation and demodulation (Only on USART0)
  - Communication at up to 115.2 Kbps
- Test Modes
  - Remote Loopback, Local Loopback, Automatic Echo
- PDC support (for USART0 only)

12.5 Timer Counter (TC)

- Six 16-bit Timer Counter Channels
- Wide range of functions including:
  - Frequency Measurement
  - Event Counting
  - Interval Measurement
  - Pulse Generation
  - Delay Timing
  - Pulse Width Modulation
  - Up/down Capabilities
- Each channel is user-configurable and contains:
  - Three external clock inputs
  - Five internal clock inputs

  - Two multi-purpose input/output signals
- Two global registers that act on all three TC Channels
- Quadrature decoder
  - Advanced line filtering
  - Position/revolution/speed
- 2-bit Gray Up/Down Counter for Stepper Motor

12.6 Pulse Width Modulation Controller (PWM)

- Four channels, one 16-bit counter per channel
- Common clock generator, providing thirteen different clocks
  - One Modulo n counter providing eleven clocks
  - Two independent linear dividers working on modulo n counter outputs
- Independent channel programming
  - Independent enable/disable commands
  - Independent clock selection
  - Independent period and duty cycle, with double buffering
  - Programmable selection of the output waveform polarity

12.7 10-bit Analog-to-Digital Converter

- Up to 16-channel ADC
- 10-bit 384 Ksamples/sec. or 8-bit 583 Ksamples/sec. Successive Approximation Register ADC
- ±2 LSB Integral Non Linearity, ±1 LSB Differential Non Linearity
- Integrated 8-to-1 multiplexer, offering eight independent 3.3V analog inputs
- External voltage reference for better accuracy on low voltage inputs
- Individual enable and disable of each channel
- Multiple trigger source
  - Hardware or software trigger
  - External trigger pin
  - Timer Counter 0 to 2 outputs TIOA0 to TIOA2 trigger
- Sleep Mode and conversion sequencer
  - Automatic wakeup on trigger and back to sleep mode after conversions of all enabled channels

12.8 Digital-to-Analog Converter (DAC)

- 1 channel 10-bit DAC
- Up to 500 ksamples/s conversion rate
- Flexible conversion range
- Multiple trigger sources
- One PDC channel

13. Package Drawings

The SAM3N series devices are available in LQFP, QFN and TFBGA packages.

Figure 13-1. 100-lead LQFP Package Drawing

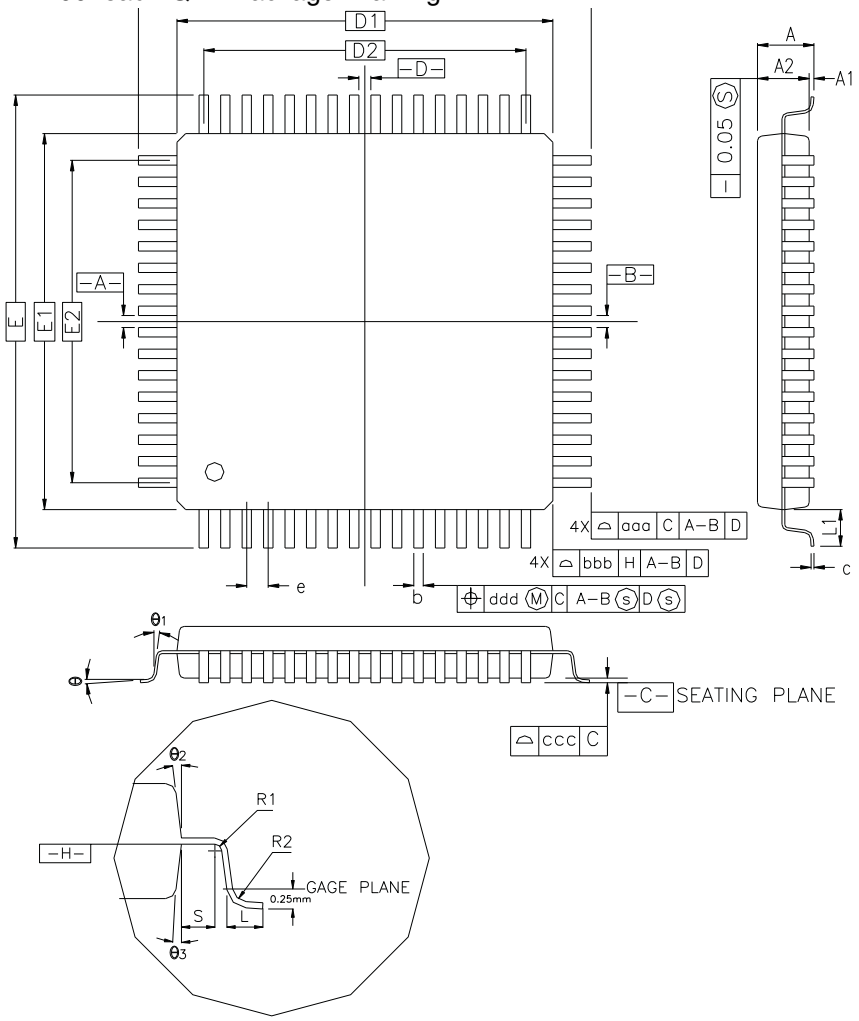

COTROL DIMENSIONS ARE IN MILLIMETERS.

SYMBOL	MILLIMETER			INCH		
	MIN.	NOM.	MAX.	MIN.	NOM.	N
A	—	—	1.60	—	—	0
A_1	0.05	—	0.15	0.002	—	0
A_2	1.35	1.40	1.45	0.053	0.055	0
D	16.00 BSC.			0.630 BSC		
D_1	14.00 BSC.			0.551 BSC		
E	16.00 BSC.			0.630 BSC		
E_1	14.00 BSC.			0.551 BSC		
R_2	0.08	—	0.20	0.003	—	0
R_1	0.08	—	—	0.003	—	
θ	0°	3.5°	7°	0°	3.5°	
$θ_1$	0°	—	—	0°	—	
$θ_2$	11°	12°	13°	11°	12°	
$θ_3$	11°	12°	13°	11°	12°	
c	0.09	—	0.20	0.004	—	0
L	0.45	0.60	0.75	0.018	0.024	0
L_1	1.00 REF			0.039 REF		
S	0.20	—	—	0.008	—	
b	0.17	0.20	0.27	0.007	0.008	0
e	0.50 BSC.			0.020 BSC.		
D2	12.00			0.472		
E2	12.00			0.472		
TOLERANCES OF FORM AND POSITIC						
aaa	0.20			0.008		
bbb	0.20			0.008		
ccc	0.08			0.003		
ddd	0.08			0.003		

Note : 1. This drawing is for general information only. Refer to JEDEC Drawing MS-026 for additional information.

Figure 13-2. 100-ball TFBGA Package Drawing

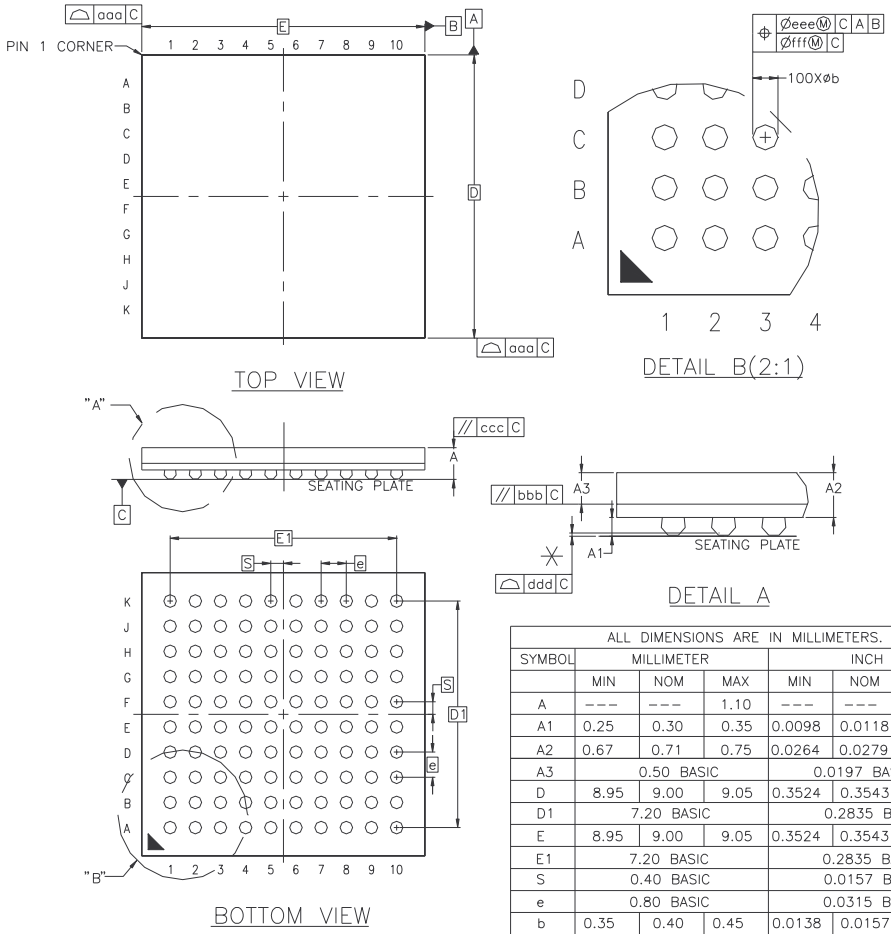

ALL DIMENSIONS ARE IN MILLIMETERS.						
SYMBOL	MILLIMETER			INCH		
	MIN	NOM	MAX	MIN	NOM	MAX
A	---	---	1.10	---	---	0.0575
A1	0.25	0.30	0.35	0.0098	0.0118	0.0138
A2	0.67	0.71	0.75	0.0264	0.0279	0.0295
A3	0.50 BASIC			0.0197 BASIC		
D	8.95	9.00	9.05	0.3524	0.3543	0.3563
D1	7.20 BASIC			0.2835 BASIC		
E	8.95	9.00	9.05	0.3524	0.3543	0.3563
E1	7.20 BASIC			0.2835 BASIC		
S	0.40 BASIC			0.0157 BASIC		
e	0.80 BASIC			0.0315 BASIC		
b	0.35	0.40	0.45	0.0138	0.0157	0.0177
aaa	0.15			0.0059		
bbb	0.20			0.0079		
ccc	0.20			0.0079		
ddd	0.12			0.0047		
eee	0.15			0.0059		
fff	0.08			0.0031		

Figure 13-3. 64- and 48-lead LQFP Package Drawing

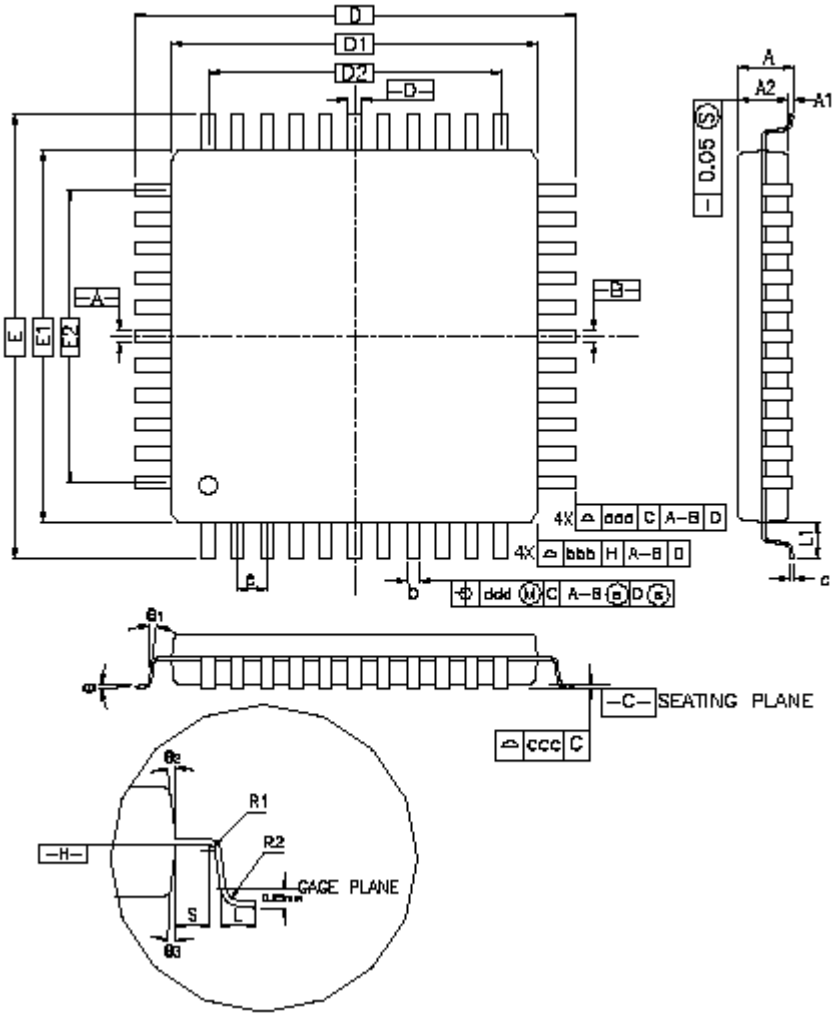

Table 13-1. 48-lead LQFP Package Dimensions (in mm)

Symbol	Millimeter			Inch		
	Min	**Nom**	**Max**	**Min**	**Nom**	**Max**
A	–	–	1.60	–	–	0.063
A1	0.05	–	0.15	0.002	–	0.006
A2	1.35	1.40	1.45	0.053	0.055	0.057
D	9.00 BSC			0.354 BSC		
D1	7.00 BSC			0.276 BSC		
E	9.00 BSC			0.354 BSC		
E1	7.00 BSC			0.276 BSC		
R2	0.08	–	0.20	0.003	–	0.008
R1	0.08	–	–	0.003	–	–
q	0°	3.5°	7°	0°	3.5°	7°
θ_1	0°	–	–	0°	–	–
θ_2	11°	12°	13°	11°	12°	13°
θ_3	11°	12°	13°	11°	12°	13°
c	0.09	–	0.20	0.004	–	0.008
L	0.45	0.60	0.75	0.018	0.024	0.030
L1	1.00 REF			0.039 REF		
S	0.20	–	–	0.008	–	–
b	0.17	0.20	0.27	0.007	0.008	0.011
e	0.50 BSC.			0.020 BSC.		
D2	5.50			0.217		
E2	5.50			0.217		
Tolerances of Form and Position						
aaa	0.20			0.008		
bbb	0.20			0.008		
ccc	0.08			0.003		
ddd	0.08			0.003		

Table 13-2. 64-lead LQFP Package Dimensions (in mm)

Symbol	Millimeter			Inch		
	Min	**Nom**	**Max**	**Min**	**Nom**	**Max**
A	–	–	1.60	–	–	0.063
A1	0.05	–	0.15	0.002	–	0.006
A2	1.35	1.40	1.45	0.053	0.055	0.057
D	12.00 BSC			0.472 BSC		
D1	10.00 BSC			0.383 BSC		
E	12.00 BSC			0.472 BSC		
E1	10.00 BSC			0.383 BSC		
R2	0.08	–	0.20	0.003	–	0.008
R1	0.08	–	–	0.003	–	–
q	0°	3.5°	7°	0°	3.5°	7°
θ_1	0°	–	–	0°	–	–
θ_2	11°	12°	13°	11°	12°	13°
θ_3	11°	12°	13°	11°	12°	13°
c	0.09	–	0.20	0.004	–	0.008
L	0.45	0.60	0.75	0.018	0.024	0.030
L1	1.00 REF			0.039 REF		
S	0.20	–	–	0.008	–	–
b	0.17	0.20	0.27	0.007	0.008	0.011
e	0.50 BSC.			0.020 BSC.		
D2	7.50			0.285		
E2	7.50			0.285		
Tolerances of Form and Position						
aaa	0.20			0.008		
bbb	0.20			0.008		
ccc	0.08			0.003		
ddd	0.08			0.003		

Figure 13-4. 48-pad QFN Package Drawing

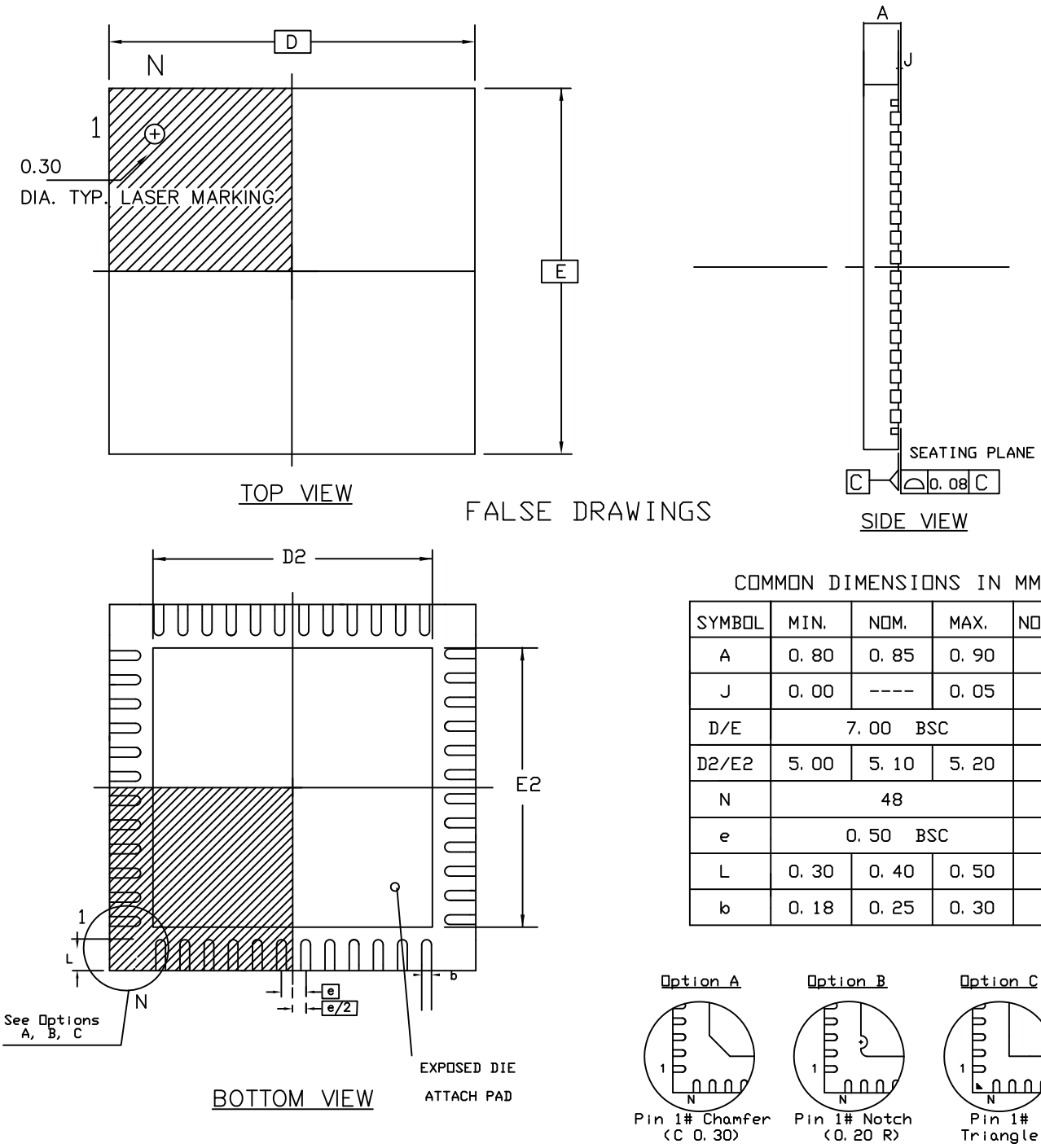

COMMON DIMENSIONS IN MM

SYMBOL	MIN.	NOM.	MAX.	NOTES
A	0.80	0.85	0.90	
J	0.00	----	0.05	
D/E	7.00 BSC			
D2/E2	5.00	5.10	5.20	
N	48			
e	0.50 BSC			
L	0.30	0.40	0.50	
b	0.18	0.25	0.30	

Table 13-3. 48-pad QFN Package Dimensions (in mm)

Symbol	Millimeter			Inch		
	Min	**Nom**	**Max**	**Min**	**Nom**	**Max**
A	–	–	090	–	–	0.035
A1	–	–	0.050	–	–	0.002
A2	–	0.65	0.70	–	0.026	0.028
A3	0.20 REF			0.008 REF		
b	0.18	0.20	0.23	0.007	0.008	0.009
D	7.00 bsc			0.276 bsc		
D2	5.45	5.60	5.75	0.215	0.220	0.226
E	7.00 bsc			0.276 bsc		
E2	5.45	5.60	5.75	0.215	0.220	0.226
L	0.35	0.40	0.45	0.014	0.016	0.018
e	0.50 bsc			0.020 bsc		
R	0.09	–	–	0.004	–	–
Tolerances of Form and Position						
aaa	0.10			0.004		
bbb	0.10			0.004		
ccc	0.05			0.002		

Figure 13-5. 64-pad QFN Package Drawing

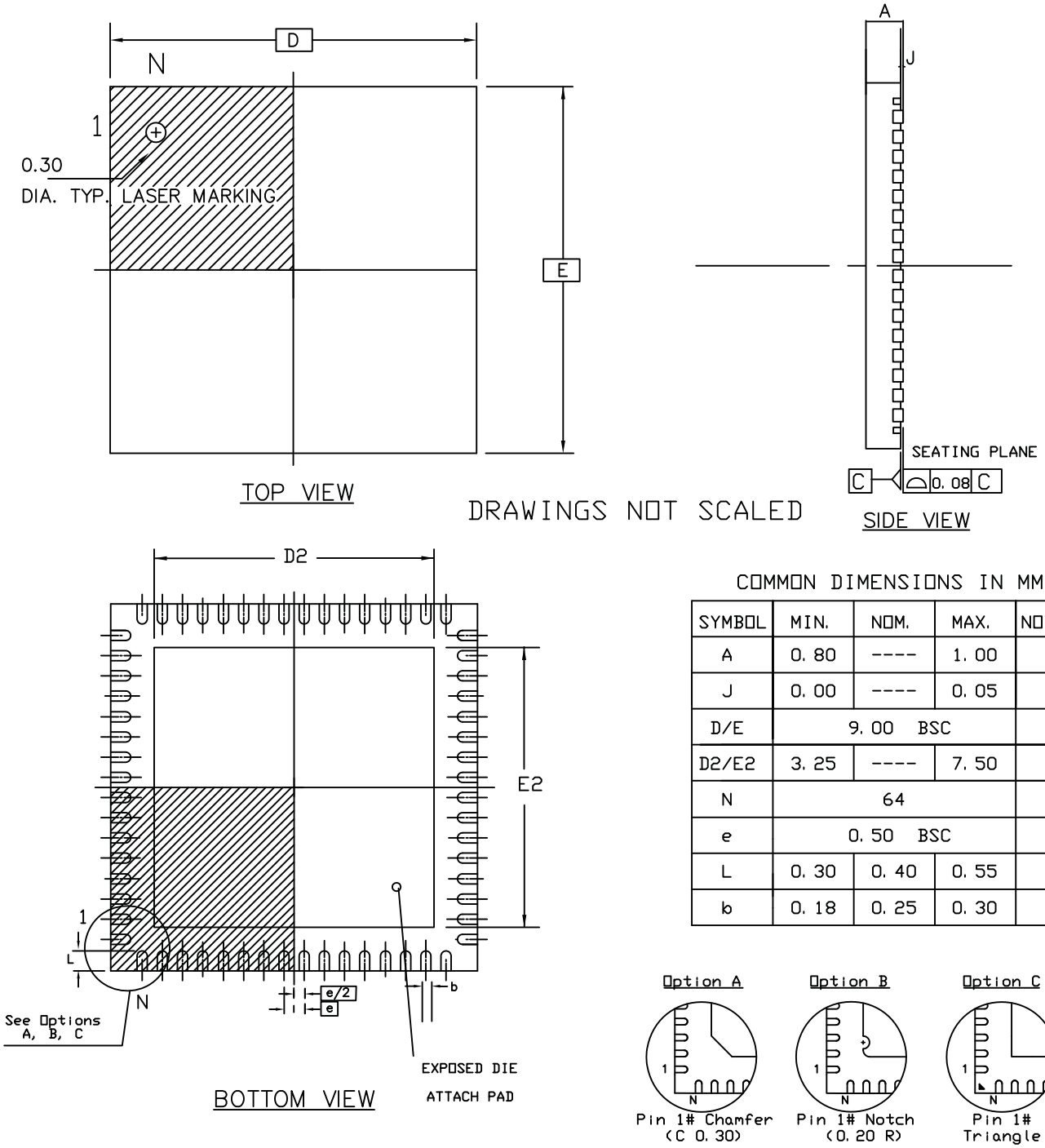

COMMON DIMENSIONS IN MM

SYMBOL	MIN.	NOM.	MAX.	NOTES
A	0.80	----	1.00	
J	0.00	----	0.05	
D/E	9.00 BSC			
D2/E2	3.25	----	7.50	
N	64			
e	0.50 BSC			
L	0.30	0.40	0.55	
b	0.18	0.25	0.30	

14. Ordering Information

Table 14-1.

Ordering Code	MRL	Flash (Kbytes)	Package	Package Type	Temperature Operating Range
ATSAM3N4CA-AU	A	256	LQFP100	Green	Industrial -40°C to 85°C
ATSAM3N4CA-CU	A	256	TFBGA100	Green	Industrial -40°C to 85°C
ATSAM3N4BA-AU	A	256	LQFP64	Green	Industrial -40°C to 85°C
ATSAM3N4BA-MU	A	256	QFN64	Green	Industrial -40°C to 85°C
ATSAM3N4AA-AU	A	256	LQFP48	Green	Industrial -40°C to 85°C
ATSAM3N4AA-MU	A	256	QFN48	Green	Industrial -40°C to 85°C
ATSAM3N2CA-AU	A	128	LQFP100	Green	Industrial -40°C to 85°C
ATSAM3N2CA-CU	A	128	TFBGA100	Green	Industrial -40°C to 85°C
ATSAM3N2BA-AU	A	128	LQFP64	Green	Industrial -40°C to 85°C
ATSAM3N2BA-MU	A	128	QFN64	Green	Industrial -40°C to 85°C
ATSAM3N2AA-AU	A	128	LQFP48	Green	Industrial -40°C to 85°C
ATSAM3N2AA-MU	A	128	QFN48	Green	Industrial -40°C to 85°C
ATSAM3N1CA-AU	A	64	LQFP100	Green	Industrial -40°C to 85°C
ATSAM3N1CB-AU	B	64	LQFP100	Green	Industrial -40°C to 85°C
ATSAM3N1CA-CU	A	64	TFBGA100	Green	Industrial -40°C to 85°C
ATSAM3N1CB-CU	B	64	TFBGA100	Green	Industrial -40°C to 85°C
ATSAM3N1BA-AU	A	64	LQFP64	Green	Industrial -40°C to 85°C
ATSAM3N1BB-AU	B	64	LQFP64	Green	Industrial -40°C to 85°C
ATSAM3N1BA-MU	A	64	QFN 64	Green	Industrial -40°C to 85°C
ATSAM3N1BB-MU	B	64	QFN 64	Green	Industrial -40°C to 85°C

Table 14-1.

Ordering Code	MRL	Flash (Kbytes)	Package	Package Type	Temperature Operating Range
ATSAM3N1AA-AU	A	64	LQFP48	Green	Industrial -40°C to 85°C
ATSAM3N1AB-AU	B	64	LQFP48	Green	Industrial -40°C to 85°C
ATSAM3N1AA-MU	A	64	QFN48	Green	Industrial -40°C to 85°C
ATSAM3N1AB-MU	B	64	QFN48	Green	Industrial -40°C to 85°C
ATSAM3N0CA-AU	A	32	LQFP100	Green	Industrial -40°C to 85°C
ATSAM3N0CA-CU	A	32	TFBGA100	Green	Industrial -40°C to 85°C
ATSAM3N0BA-AU	A	32	LQFP64	Green	Industrial -40°C to 85°C
ATSAM3N0BA-MU	A	32	QFN64	Green	Industrial -40°C to 85°C
ATSAM3N0AA-AU	A	32	LQFP48	Green	Industrial -40°C to 85°C
ATSAM3N0AA-MU	A	32	QFN48	Green	Industrial -40°C to 85°C
ATSAM3N00BA-AU	A	16	LQFP64	Green	Industrial -40°C to 85°C
ATSAM3N00BA-MU	A	16	QFN64	Green	Industrial -40°C to 85°C
ATSAM3N00AA-AU	A	16	LQFP48	Green	Industrial -40°C to 85°C
ATSAM3N00AA-MU	A	16	QFN48	Green	Industrial -40°C to 85°C

Revision History

Doc. Rev. 11011BS	Comments	Change Request Ref.
	Overview:	
	All mentions of 100-ball LFBGA changed into 100-ball TFBGA	8044
	Section 8. “Product Mapping”, Heading was ‘Memories’. Changed to ‘Product Mapping’	7685
	Section 4.1.4 “100-ball TFBGA Pinout”, whole pinout table updated	7201
	Updated package dimensions in ‘Features’	7965

Doc. Rev	Comments	Change Request Ref.
11011AS	First issue	

Headquarters

Atmel Corporation
2325 Orchard Parkway
San Jose, CA 95131
USA
Tel: 1(408) 441-0311
Fax: 1(408) 487-2600

International

Atmel Asia
Unit 1-5 & 16, 19/F
BEA Tower, Millennium City 5
418 Kwun Tong Road
Kwun Tong, Kowloon
Hong Kong
Tel: (852) 2245-6100
Fax: (852) 2722-1369

Atmel Europe
Le Krebs
8, Rue Jean-Pierre Timbaud
BP 309
78054 Saint-Quentin-en-Yvelines Cedex
France
Tel: (33) 1-30-60-70-00
Fax: (33) 1-30-60-71-11

Atmel Japan
9F, Tonetsu Shinkawa Bldg.
1-24-8 Shinkawa
Chuo-ku, Tokyo 104-0033
Japan
Tel: (81) 3-3523-3551
Fax: (81) 3-3523-7581

Product Contact

Web Site
www.atmel.com
www.atmel.com/AT91SAM

Technical Support
AT91SAM Support
Atmel techincal support

Sales Contacts
www.atmel.com/contacts/

Literature Requests
www.atmel.com/literature

Disclaimer: The information in this document is provided in connection with Atmel products. No license, express or implied, by estoppel or otherwise, to any intellectual property right is granted by this document or in connection with the sale of Atmel products. **EXCEPT AS SET FORTH IN ATMEL'S TERMS AND CONDITIONS OF SALE LOCATED ON ATMEL'S WEB SITE, ATMEL ASSUMES NO LIABILITY WHATSOEVER AND DISCLAIMS ANY EXPRESS, IMPLIED OR STATUTORY WARRANTY RELATING TO ITS PRODUCTS INCLUDING, BUT NOT LIMITED TO, THE IMPLIED WARRANTY OF MERCHANTABILITY, FITNESS FOR A PARTICULAR PURPOSE, OR NON-INFRINGEMENT. IN NO EVENT SHALL ATMEL BE LIABLE FOR ANY DIRECT, INDIRECT, CONSEQUENTIAL, PUNITIVE, SPECIAL OR INCIDENTAL DAMAGES (INCLUDING, WITHOUT LIMITATION, DAMAGES FOR LOSS OF PROFITS, BUSINESS INTERRUPTION, OR LOSS OF INFORMATION) ARISING OUT OF THE USE OR INABILITY TO USE THIS DOCUMENT, EVEN IF ATMEL HAS BEEN ADVISED OF THE POSSIBILITY OF SUCH DAMAGES.** Atmel makes no representations or warranties with respect to the accuracy or completeness of the contents of this document and reserves the right to make changes to specifications and product descriptions at any time without notice. Atmel does not make any commitment to update the information contained herein. Unless specifically provided otherwise, Atmel products are not suitable for, and shall not be used in, automotive applications. Atmel's products are not intended, authorized, or warranted for use as components in applications intended to support or sustain life.

© 2010 Atmel Corporation. All rights reserved. Atmel®, Atmel logo and combinations thereof, SAM-BA® and others are registered trademarks or trademarks of Atmel Corporation or its subsidiaries. ARM®, ARM®Powered logo, Thumb® and others are registered trademarks or trademarks of ARM Ltd. Other terms and product names may be trademarks of others.