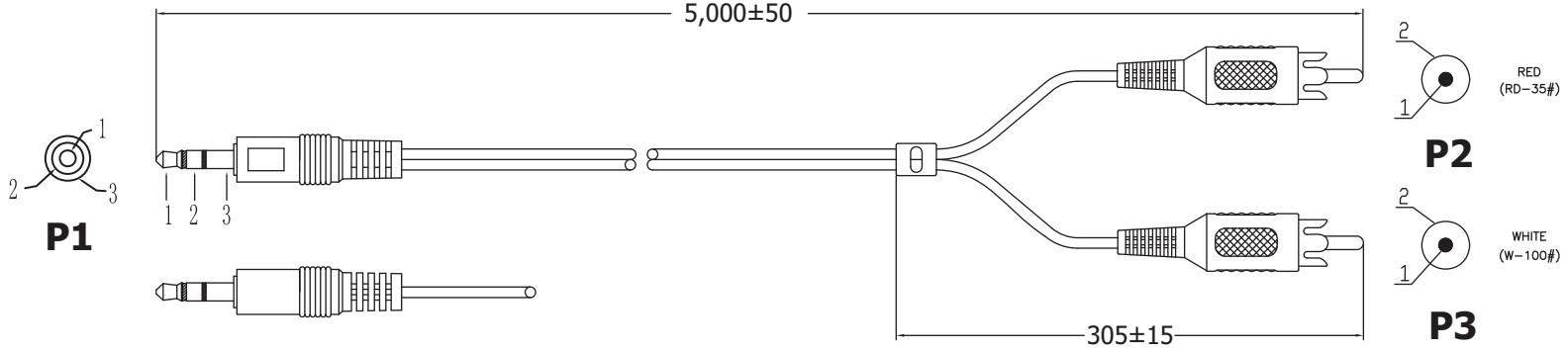

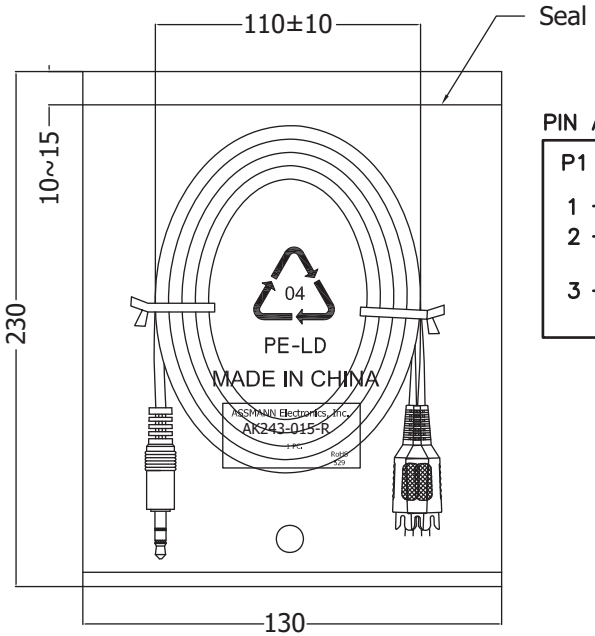

PIN ASSIGNMENT:

P1	P2	P3	COLOR
1	1		RED
2		1	WHITE
3	2		DRAIN(RED)
		2	DRAIN(WHITE)

Material:

- Cable: NOUS [(10/0.10)+S(28/0.10)]*2F
  - PVC-40P Jacket Black
  - OD 2.8*5.6MM
  - L=1500±10MM
- P1 Connector: 3.5ST Male
  - Tray 6.0MM L=26MM
  - Mold Type Ni-Plated insulator color Black
- P2 Connector: RCA Plug Male
  - Blossom Type Ni-Plated insulator color Brown
  - In Jacket: Clear LD-PE
  - Out Jacket: PVC-40P Red
- P3 Connector: RCA Plug Male
  - Blossom Type Ni-Plated insulator color Brown
  - In Jacket: Clear LD-PE
  - Out Jacket: PVC-40P White
- Tube: Heat Shrink Black OD1.5*10MM
- S/R: Black PVC 40P

Electrical:

- 100% Short, open, miswire test
- Conduct resistance: 5Ω (Max)
- Insulation resistance: 5MΩ (Min)
- Dielectric test: 300V DC

Unit: MM

RoHS Complaint

Scale	1:1						Name
TOLERANCE							
X.X	±0.40				Drawn	01.03.12	Chappell
X.XX	±0.25				Approved		
X.XXX	±0.15						
Angle	±3°						
			Modification	Date	Name		

ASSMANN WSW components

Item No. AK243-050-R

Title Stereo Connection Cable - 5 Meters, 3.5ST Male <=> 2x RCA Male

Drawing No.

rev00

Replace

Sheet